CHANGE

U.S. DEPARTMENT OF TRANSPORTATION
FEDERAL AVIATION ADMINISTRATION

CHG 1 to VN200 8240.52

02/01/07

SUBJ: Flight Inspection Standard Operating Procedures

1. PURPOSE. This change transmits revisions to the Flight Inspection Standard Operating Procedures, Order VN200 8240.52, dated October 1, 2005.

2. DISTRIBUTION. This change is distributed to Aviation System Standards Flight Inspection Operations Offices, crewmembers, and to special military addressees.

3. EFFECTIVE DATE. This change is effective March 1, 2007.

4. CANCELLATIONS. The following Notices are canceled:

a. N VN200 8200.24, Change to Order VN200 8240.52, Appendix 10, Database Management, dated February 15, 2006.

b. N VN200 8200.26, Interim Changes to Order VN200 8240.52, dated April 7, 2006.

c. N VN200 8200.28, Radio Beacons, Order VN200 8240.52, Chapter 12, dated May 15, 2006.

d. N VN200 8200.30, DME/ DME File Process, dated June 15, 2006.

5. EXPLANATION OF CHANGES:

a. Chapter 1:

(1) Paragraph 1.10. Changed wording to reflect new concept of Order VN200 8240.52.

(2) Paragraph 1.13. Background information reworded based on new Order VN200 8240.52 concept.

(3) Paragraph 1.15. Altitude was separated into two lines to prevent confusion.

Distribution: AJW-3300 offices;
Aviation System Standards
Flight Inspection Operations Crewmembers;
Special Military Addressees

Initiated By: Air Traffic Operations (ATO-W)
Aviation System Standards
Flight Inspection Operations
Flight Inspection Policy (AJW-3310)

b. Chapter 2:

(1) Paragraph 2.10a(1). Reformatted PIC duties such that each line begins with action to accomplish.

(2) Paragraph 2.10a(3)(a) and (b). Reformatted checklist for standardization.

(3) Paragraph 2.10b(2). Office name change from Resource and Data Management to Technical Services Sub-Team.

(4) Paragraph 2.10b(4)(g)2. Added reference to Chapter 11 to standardize with Paragraph 2.10b(4)(g)1.

(5) Paragraph 2.10c(1)(a). To reduce redundancy, deleted text and added reference to Chapter 5.

(6) Paragraph 2.10c(2). Title of Order 8240.36 changed to Flight Inspection Report Processing System; reference to AVN deleted.

(7) Paragraph 2.10c(2)(d). Deleted outdated information and referenced new FAA Order 8240.52, Appendix 2.

c. Chapter 4:

(1) Paragraph 4.13. Changed wording of first sentence from passive to active voice.

(2) Paragraph 4.34b and f. Office name change from Resource and Data Management to Flight Inspection Central Operations (FICO) Technical Services Sub-Team (TSS).

(3) Paragraph 4.35d. Title of Order 8240.36 changed to Flight Inspection Report Processing System.

(4) Paragraph 4.35e. Office name change from Resource and Data Management to Flight Inspection Central Operations (FICO) Technical Services Sub-Team (TSS).

d. Chapter 5:

(1) Paragraph 5.12a, b, c, and g(2). Added “General” instructions. Deleted “Flight Data Center (FDC) NOTAM(s)” paragraph. Reorganized the information in the “Facility NOTAM(s)” and “Instrument Flight Procedures” paragraphs. Directions were updated to match current offices and policies. More detail was added to the paragraph concerned with initiating NOTAM(s) for military facilities and/or instrument procedures.

(2) Paragraph 5.12i. Added guidance on facility restriction philosophy.

(3) Paragraph 5.12i(15). Deleted distance from NOTAM example.

(4) **Paragraph 5.21.** Removed requirement to retain source material for PAR, VGSI, and NDB inspections once the report has been archived. Added requirement to archive data logger files for all inspection utilizing AFIS, when conducted with a functioning data logger. Added instructions for the new data indexing utility.

(5) **Paragraph 5.22.** Title of FAA Order 8240.36 changed to read, "Flight Inspection Report Processing System".

e. Chapter 6:

(1) **Paragraph 6.10e.** Added guidance to use 8260 series procedure development criteria..

(2) **Paragraph 6.10e(1)(a).** Deleted (ROC of 1,000ft).

(3) **Paragraph 6.10e(1)(c).** Included other options of where to find final ROC.

(4) **Paragraph 6.11c(3)(a).** Changed wording of paragraph for clarity.

(5) **Paragraph 6.11e(1)(a) and (b).** Added (true) in two places for accuracy.

(6) **Paragraph 6.11e(4)(e).** Added "private owner" to the list of contacts for SIAP discrepancies.

(7) **Paragraph 6.12a and b.** Rotated and enlarged graphics for ease of use.

f. Chapter 7:

(1) **Paragraph 7.12b(1)(a).** Changed wording to allow level runs on all lights for all types of inspections.

(2) **Paragraph 7.21b(7).** Changed wording for accuracy and to match Order 8200.1.

(3) **Paragraph 7.21b(7)(a) and (b).** Paragraphs added.

(4) **Paragraph 7.21b(7) NOTE.** Reworded first sentence for clarity.

g. Chapter 11:

(1) **Table of Contents.** Changed Paragraph 11.57d from Spectrum Analysis to Frequency Interference to match Order 8200.1C, Change 1.

(2) **Paragraph 11.11b.** Title changed from technician to mission specialist.

(3) **Paragraph 11.20a.** Changed from passive to active voice.

(4) **Paragraph 11.20a(3).** In the second sentence changed "site" to "antenna" elevation to mirror changes made to all like references in Order 8200.1C, Change 1.

(5) **Table 11-2B.** Added verbiage to match Order 8200.1.

(6) **Table 11.20b(1)(a).** Name change from FYSIS to AVNIS.

(7) **Paragraph 11.20b(3)(a).** Verbiage in parentheses removed.

(8) **Paragraph 11.20c(1)(b).** Added the word "to" for correctness.

(9) **Paragraph 11.20d(4).** Removed preferred method for checking crossing radials. Neither method is preferable over the other.

(10) **Paragraph 11.20e**. Removed MAGVAR change to match Order 8200.1.

(11) **Paragraph 11.20e(3).** Changed to match Order 8200.1 and spelled out "magnetic variation."

(12) **Paragraph 11.20e(6)(d).** Deleted bolded "erroneous distance information" from the beginning of paragraph to match Order 8200.1C, Change 1.

(13) **Paragraph 11.20f.** Changed name from FYSIS to AVNIS.

(14) **Paragraph 11.20f(1)(a) NOTE.** Changed "rotating drum type" to "mechanically rotating" for clarity.

(15) **Paragraph 11.20f(1)(a) formula.** Changed "site" to "antenna" to match like change to Order 8200.1C, Change 1.

(16) **Paragraph 11.20f(1)(b).** Added text concerning where to check alignment radially that was inadvertently dropped back into chapter. Changed authority of who approves use of this method to match Order 8200.1C, Change 1.

(17) **Paragraph 11.20f(2).** Changed "site" to "antenna" to match like change in Order 8200.1C, Change 1.

(18) **Paragraph 11.20f(2)(a).** Changed "site" to "antenna" to match like change in Order 8200.1C, Change 1.

(19) **Paragraph 11.20f(2)(b).** Added paragraph at bottom of the page to clarify when ESV revalidation is required.

(20) **Paragraph 11.20h(1)(c)2 last note.** Added to match like change in Order 8200.1C, Change 1.

(21) **Paragraph 11.20h(2)(b).** Changed last sentence to match Order 8200.1.

(22) **Paragraph 11.20j.** Sentence changed to match Order 8200.1.

(23) **Paragraph 11.33. .** Deleted "stand alone" from second sentence to match Order 8200.1C, Change 1.

(24) **Paragraph 11.42l(9).** Deleted to match Order 8200.1.

(25) **Paragraph 11.57d.** Changed "spectrum analysis" to "frequency interference" to match change to Order 8200.1C.

(26) **Paragraph 11.57e(1)(b).** Changed paragraph to match Order 8200.1C, Change 1.

h. Chapter 12:

(1) Chapter 12 in total. Re-written to align with 8200.1C, Change 1.

(2) Paragraph 12.10. Paragraphs expanded to include more detailed information about radio beacon characteristics, classification and identifier coding.

(3) Paragraph 12.11b. Added guidance for pre-flight coordination with ground.

(4) Paragraph 12.11c. Added flight inspector responsibility to examine every non-NDB SIAP inspected to determine if it is supported by an NDB, and if so, determine if that NDB is scheduled for periodic inspections. If not, a periodic inspection of that NDB facility must be accomplished in conjunction with the inspection of the related SIAP.

(5) Paragraph 12.12, 12a and b. Expanded details and guidance.

(6) Paragraph 12.12c. Changed title to "Coverage Orbit" to match checklist. Added guidance to switch "transmitters at least every 30 degrees," if opt to switch transmitters during the orbit.

(7) Paragraph 12.12c(2) and (3). Guidance clarified.

(8) Paragraph 12.12d. Renumbered from Paragraph 12.12h. Guidance clarified, added ICAO recommendation concerning frequency separation when two beacons are used for a single ILS.

(9) Paragraph 12.12e. Renumbered from Paragraph 12.12g. Added guidance to establish ESV(s) at normal power.

(10) Paragraph 12.12f. No significant change, renumbered from Paragraph 12.12d.

(11) Paragraph 12.12g. Renumbered from Paragraph 12.12e. Added guidance to alternate transmitters between periodic inspections.

(12) Paragraph 12.12h. Renumbered from paragraph 12.12f. Changed requirement to repeat all checks on standby power, not just spot check.

(13) Paragraph 12.12i. Added specifics for Antenna Change, Transmitter Change, and Frequency Change inspections.

(14) Paragraph 12.13. Changed to "Reporting," and provides references for reporting results.

(15) Paragraph 12.14. Renumbered from Paragraph 12.13. Added reference to new NDB Flight Inspection Worksheet in Appendix 11.

i. Chapter 13:

(1) **Paragraph 13.11b.** Changed requirement so use of the NFD navigational database is not required.

(2) **Paragraph 13.11c.** Change bar at top of Page 4. Deleted checklist from basic VN200 8240.52 because they are no longer applicable.

(3) **Paragraph 13.12a.** Expanded guidance, including specifics for commissioning vs. periodic inspections.

(4) **Paragraph 13.12b.** Deleted checklists for AFIS/ Equipment Setup. The checklist is no longer applicable. Merged remaining text into Paragraph 12a. Paragraph 12b now pertains to "Maneuvering," the old Paragraph 12c.

(5) **Paragraph 13.12b(1) NOTE.** Added second sentence for reference.

(6) **Paragraph 13.12b(2).** Reworded sentence for clarity.

(7) **Paragraph 13.12b(3).** Added reference to Chapter 6. STARS can be flown in either direction where no vertical profile is specified.

(8) **Paragraph 13.12c.** Deleted parts of checklist that are no longer applicable.

(9) **Paragraph 13.21.** Added references to orders to match 8200.1. Deleted unnecessary last sentence.

(10) **Paragraph 13.22.** Deleted parts of paragraph that are no longer applicable.

(11) **Paragraph 13.31a.** Deleted original sub-paragraph (3) pertaining to selection of "WAAS DISABLED" on the AFIS of Challenger aircraft. This is no longer applicable.

(12) **Paragraph 13.31a(4) and (5).** Changed sentences for clarity.

(13) **Paragraph 13.31b.** Added paragraph directing when the inspection should be terminated or rescheduled due to out of service DMEs.

(14) **Paragraph 13.31b(1)(b).** Added text to match Order 8200.1.

(15) **Figure 13-2.** Added graphic to explain paragraph 13.31b(1)(b) verbiage.

(16) **Paragraph 13.31c(1)-(3) and NOTE.** Changed all "Type A and B" RNAV references to "RNAV 2 and 1", respectively.

(17) **Paragraph 13.32.** Added to incorporate Notice N VN200 8200.30.

(18) **Paragraph 13.40.** Changed reference from Order 8260.50 to Order 8260.54. Changed HAT from 250 ft to 200 ft.

(19) **Paragraph 13.42.** Changed reference from Order 8260.50 to Order 8260.54.

(20) **Paragraph 13.42c(3)(c).** Reworded second sentence for clarity.

(21) **Paragraph 13.43a.** Changed reference from Order 8260.50 to Order 8260.54.

(22) **Paragraph 13.43b.** Added reference to 8200.1.

(23) **Paragraph 13.43d.** Updated reference to Chapter 6.

(24) **Paragraph 13.45.** Changed to match Order 8200.1.

(25) **Paragraph 13.50.** Updated introduction to remove extraneous information.

j. Paragraph 14.12b. Allows UHF coverage to be confirmed by targets of opportunity.

k. Chapter 15:

(1) **Paragraph 15.10.** Changed wording of paragraph slightly for plain language purposes.

(2) **Paragraph 15.11.** Added "profiles" to match verbiage used later in the text.

(3) **Paragraph 15.11a(1).** Changed wording of paragraph slightly for plain language purposes. Deleted reference to LCA

(4) **Paragraph 15.11a(3).** Changed "0" to "to" for clarity.

(5) **Paragraph 15.11b(1).** Changed level run method to match 8200.1C, Change 1.

(6) **Paragraph 15.11d(1).** Added procedure for checking clearance below path in lieu of structure below path. As written there was no indication that any clearance below path run would commence outside the GSI distance.

(7) **Paragraph 15.12.** Added paragraph to incorporate maintenance standards and tolerances that are being removed from Order 8200.1C, Change 1.

(8) **Paragraph 15.12a(1)(e).** Added paragraph to encompass other types of changes to the facility that were not listed previously.

(9) **Paragraph 15.12a(2).** Added first sentence for clarification.

(10) **Paragraph 15.12a(3).** Name change due to ATO realignment.

(11) **Paragraph 15.12b-Figure 15-1F.** Added text, figures, and tables deleted from 8200.1C, Change 1.

(12) **Paragraph 15.13.** Changed paragraph and tables from hard example checklists to less stringent "considerations" in an effort to incorporate the first phase of the 8240.52 new concept. The overall concept is to give the inspector the knowledge base of why things are done in a particular order and then let them create their own job aid.

(13) **Paragraph 15.20.** Reworded paragraph for clarity. Deleted reference to glideslope since the section pertains to localizers.

(14) **Paragraph 15.21c(1).** Changed wording to match 8200.1C, Change 1.

(15) **Paragraph 15.21c(1), Other Consideration.** In the first bullet changed reference from LCA to LSA.

(16) **Paragraph 15.21c(1).** Deleted original third bullet pertaining to single frequency localizers because it was unnecessary information and there was no step 4.

(17) **Paragraph 15.21d, Step 1, Maneuver.** Deleted reference to LCA and reworded to match 8200.1C, Change 1.

(18) **Paragraph 15.21e, Step 1, Maneuver.** Changed wording to match 8200.1C, Change 1.

(19) **Paragraph 15.21e, Other Considerations.** Changed order of bullet items to be logically sequential.

(20) **Paragraph 15.21f, Maneuver.** Changed reference acronym LCA to LSA.

(21) **Paragraph 15.21f, Other Considerations.** Changed acronym LCA to LSA. Deleted reference to Appendix 1 for LCA definition. Added fifth bullet to incorporate new procedure information. Added sixth bullet for informational purposes.

(22) **Paragraph 15.21f(1).** Added note under formula for informational purposes.

(23) **Paragraph 15.21g(1) Maneuver.** Changed acronym from LCA to LSA.

(24) **Paragraph 15.21g(1) Other Considerations.** Changed all LCA acronym references to LSA. Changed last bullet to reflect 8200.1C, Change 1.

(25) **Paragraph 15.21g(2)(a).** Removed original subparagraph 2, "If the lowest clearance configuration…" The information is outdated and no longer applicable.

(26) **Paragraph 15.21g(2)(a)4.** Changed sentence from passive to active voice.

(27) **Paragraph 15.21g(2)(b).** Changed LCA acronym to LSA.

(28) **Paragraph 15.21g(2)(b), Steps 2-5 Maneuver.** Changed "alarm" to "reference" and replaced LCA with LSA.

(29) **Paragraph 15.21g(2)(b), Step 1-3 Analysis.** Replaced LCA with LSA.

(30) **Paragraph 15.21g(2)(c).** Replaced LCA with LSA.

(31) **Paragraph 15.21g(2)(c), step 2-5 maneuver.** Replaced :"alarm" with "reference" and replaced LCA with LSA.

(32) **Paragraph 15.21g(2)(c), step 1-3 analysis.** Replaced LCA with LSA.

(33) **Paragraph 15.21g(2)(c), Other Considerations.** Replaced LCA with LSA.

(34) **Paragraph 15.21h(2) Maneuver and Analysis.** Reformatted and reworded paragraphs for clarity.

(35) **Paragraph 15.21h(2) Other Considerations.** Added last sentence to incorporate 8240.36 requirement.

(36) **Paragraph 15.21h(3) Other Considerations.** Changed first two bullets from passive to active voice. Changed third bullet to reflect changes in 8200.1C, Change 1.

(37) **Paragraph 15.21h(4) Maneuver.** Reworded first part of paragraph for ease of reading.

(38) **Paragraph 15.21h(5) Other Considerations.** In third bullet added reference to where to find documentation procedures.

(39) **Paragraph 15.21j(2).** Replaced LCA with LSA.

(40) **Paragraph 15.21k.** Added second sentence for informational purposes.

(41) **Paragraph 15.21m Steps 1-4 Maneuver.** Changed wording to match 8200.1C, Change 1.

(42) **Paragraph 15.21m Note 1.** Replaced LCA with LSA and "site" with "antenna" to match 8200.1C, Change 1.

(43) **Paragraph 15.21m Notes 2 and 3.** Added notes to incorporate 8200.1C requirements.

(44) **Paragraph 15.21m Other Considerations.** In fifth bullet replaced LCA with LSA.

(45) **Paragraph 15.21n Maneuver.** Replaced "site" with "antenna" to match 8200.1C, Change 1.

(46) **Paragraph 15.21o Maneuver.** Replaced LCA with LSA.

(47) **Paragraph 15.21p Maneuver.** Reworded sentence for clarity.

(48) **Paragraph 15.21q Maneuver.** Reworded sentence for clarity.

(49) **Paragraph 15.21r(1) Figure 15-1.** Replaced existing graphic with easier to read version.

(50) **Paragraph 15.30c(2) Steps 1 and 2 Maneuvering.** Replaced "site" with "antenna" to match 8200.1C, Change 1.

(51) **Paragraph 15.30c(3)(c) Other Considerations.** Added first bullet to incorporate like information in 8200.1C.

(52) **Paragraph 15.30j Other Considerations.** Changed "GSI" to "established level run".

(53) **Paragraph 15.30k(1) Other Considerations.** Added first bullet to incorporate like information from 8200.1C.

(54) **Paragraph 15.30k(1) Other Considerations.** In second bullet changed "height" to "altitude" for correctness.

(55) **Paragraph 15.30m Other Considerations.** Change "GSI" to "established level run".

(56) **Paragraph 15.30q Maneuvering.** Changed to match 8200.1C.

(57) **Paragraph 15.30r Step 7 Analysis.** Reworded for clarity.

(58) **Paragraph 15.30t.** Removed "narrow" (original third item) as a required check.

l. Chapter 16:

(1) **Paragraph 16.12c(4).** Office name change from Resource and Data Management to FICO TSS.

(2) **Paragraph 16.12d(1).** Changed vertical coverage to match change in Order 8200.1C, Change 1.

m. Chapter 22:

(1) **Paragraph 22.11a(4)(b).** Rewrote steps for coverage evaluation and enhanced the associated graphics.

(2) **Paragraph 22.11b(1).** Replaced LCA with LSA.

(3) **Paragraph 22.11b(2).** Changed guidance to match 8200.1C change.

(4) **Paragraph 22.11f.** Added additional information on the procedure for inspecting procedural routes predicated on DME/DME position estimation.

n. Appendix 1:

(1) Updated definition of Critical DME per latest AC 90-100.

(2) Deleted LCA definition which no longer exists per LCA discussions about using ICAO definition.

(3) Added LSA definition.

(4) Added definitions for ILS-Glidepath Rate of Change, ILS-Glidepath Reversal, ILS-Half ILS Glidepath Sector, HLOM, and MLOM.

o. Appendix 8:

(1) **Paragraph A8.10a(1).** Changed reference from LCA to LSA to match new Order 8200.1 guidance.

(2) **Paragraph A8.11a(23).** Changed reference from LCA to FAF.

p. Appendix 10:

(1) **Table of Contents.** Table 10-5 dBm to Microvolt Conversion added.

(2) **Paragraph A10.1d NOTE.** Note deleted because current version of software is not always available on the AIF.

(3) **Paragraph A10.1e.** Changed tolerance of ±0.02 to ±0.05 to incorporate Notice N VN200 8200.24.

(4) **Paragraph A10.1e(1).** Third sentence changed to read, "Glide Slope. PAR, and VGSI latitude and longitude: tolerance of ± 0.05 seconds is acceptable due to rounding".

(5) **Paragraph A10.3 Table 10-1.** Reformatted table for ease of use.

(6) **Paragraph A10.3 Table 10-2.** Aircraft dimensions updated for accuracy.

(7) **Paragraph A10.3 Table 10-3.** B300 30° bearing corrected from +8 to +7.

(8) **Paragraph A10.3 Table 10-5.** dBm to Microvolt Conversion table added.

q. **Appendix 11.** Added new appendix for inspection worksheets and tolerances. Added worksheets for NDB and PAR inspections. This will be expanded upon in future changes.

6. DISPOSAL OF TRANSMITTAL. After filing the revised pages, the change transmittal should be retained.

PAGE CONTROL CHART

REMOVE PAGES	DATED	INSERT PAGES	DATED
1-1 and 1-2	10/01/05	1-1 and 1-2	02/01/07
2i (and ii)	10/01/05	2i (and ii)	02/01/07
2-1 thru 2-6	10/01/05	2-1 thru 2-6	02/01/07
4-3	10/01/05	4-3	02/01/07
4-4	10/01/05	4-4	10/01/05
4-9 thru 10	10/01/05	4-9 thru 10	02/01/07
5-i (and ii)	10/01/05	5-i (and ii)	02/01/07
5-1	10/01/05	5-1	10/01/05
5-2 thru 8	10/01/05	5-2 thru 11 (and 12)	02/01/07
6-3	10/01/05	6-3	02/01/07
6-4	10/01/05	6-4	10/01/05
6-9	10/01/05	6-9	02/01/07
6-10	10/01/05	6-10	10/01/05
6-11	10/01/05	6-11	02/01/07
6-12	10/01/05	6-12	10/01/05
6-13	10/01/05	6-13	02/01/07
6-14	10/01/05	6-14	10/01/05
6-17 thru 18	10/01/05	6-17 thru 18	02/01/07

PAGE CONTROL CHART

(continued)

REMOVE PAGES	DATED	INSERT PAGES	DATED
7-i	10/01/05	7-i	10/01/05
7-ii thru iii (and iv)	10/01/05	7-ii thru iii (and iv)	02/01/07
7-13	10/01/05	7-13	10/01/05
7-14	10/01/05	7-14	02/01/07
7-25	10/01/05	7-25	02/01/07
7-26	10/01/05	7-26	10/01/05
7-29	10/01/05	7-29	10/01/05
7-30 thru 32	10/01/05	7-30 thru 32	02/01/07
11-i	10/01/05	11-i	02/01/07
11-ii	10/01/05	11-ii	10/01/05
11-iii (and iv)	10/01/05	11-iii (and iv)	02/01/07
11-1	10/01/05	11-1	10/01/05
11-2	10/01/05	11-2	02/01/07
11-3	10/01/05	11-3	10/01/05
11-4	10/01/05	11-4	02/01/07
11-5	10/01/05	11-5	10/01/05
11-6 thru 11-17	10/01/05	11-6 thru 11-17	02/01/07
11-18 and 19	10/01/05	11-18 and 19	10/01/05
11-20 and 21	10/01/05	11-20 and 21	02/01/07
11-22	10/01/05	11-22	10/01/05
11-31	10/01/05	11-31	02/01/07
11-32	10/01/05	11-32	10/01/05
11-33	10/01/05	11-33	02/01/07
11-34 and 35	10/01/05	11-34 and 35	10/01/05
11-36	10/01/05	11-36	02/01/07
12-i (and ii) thru 12-8	10/01/05	12-i (and ii) thru 12-8	02/01/07
13-i thru ii	10/01/05	13-i thru ii	02/01/07
13-3 thru 28	10/01/05	13-3 thru 28	02/01/07
14-7	10/01/05	14-7	02/01/07
14-8	10/01/05	14-8	10/01/05
15-i thru 15-3	10/01/05	15-i thru 15-3	02/01/07
15-4	10/01/05	15-4	10/01/05
15-5 thru 15-75 (and 76)	10/01/05	15-5 thru 15-75 (and 76)	02/01/07

PAGE CONTROL CHART

REMOVE PAGES	DATED	INSERT PAGES	DATED
16-3	10/01/05	16-3	10/01/05
16-4	10/01/05	16-4	02/01/07
22-i (and ii) thru 22-10	10/01/05	22-i (and ii) thru 22-10	02/01/07
A1-5	10/01/05	A1-5	10/01/05
A1-6	10/01/05	A1-6	02/01/07
A1-7	10/01/05	A1-7	02/01/07
A1-8 thru 9	10/01/05	A1-8 thru 9	10/01/05
A1-10	10/01/05	A1-10	02/01/07
A1-11	10/01/05	A1-11	10/01/05
A1-12	10/01/05	A1-12	02/01/07
A1-15	10/01/05	A1-15	10/01/05
A1-16	10/01/05	A1-16	02/01/07
A1-33	10/01/05	A1-33	10/01/05
A1-34 thru37	10/01/05	A1-34 thru 37	02/01/07
A1-38	10/01/05	A1-38	10/01/05
A8-7	10/01/05	A8-7	10/01/05
A8-8	10/01/05	A8-8	02/01/07
A8-13	10/01/05	A8-13	10/01/05
A8-14	10/01/05	A8-14	02/01/07
A10-i (and ii)	10/01/05	A10-i (and ii)	02/01/07
A10-3	10/10/05	A10-3	02/01/07
A10-4	10/01/05	A10-4	10/01/05
A10-9	10/01/05	A10-9	10/01/05
A10-10 thru A10-12	10/01/05	A10-10 thru A10-13 (and 14)	02/01/07
		A11-i (and ii) thru 11-4	02/01/07

/s/

David H. Boulter
Director of Operations,
Flight Inspection Operations

This Page Intentionally Left Blank

U.S. DEPARTMENT OF TRANSPORTATION
FEDERAL AVIATION ADMINISTRATION

ORDER
VN200
8240.52

Effective Date:
10/01/05

SUBJ: Flight Inspection Standard Operating Procedures

The Flight Inspection Standard Operating Procedures Order is applicable to all personnel conducting flight inspection operations. It provides instructions for accomplishing the flight inspection mission requirement. This order also provides guidance in using the AVN Inspection System (AVNIS). It contains information and procedures intended for use by aircrew personnel whose duties involve the inspection and certification of navigational aids supporting the National Airspace System and other United States aviation interests. The information and procedures contained herein will provide continuity between various offices and aircrews performing flight inspections.

All references to manuals, orders, or technical issuances (TI(s)) pertain to the latest revision or change of those documents. All current Notices must also be considered when applying the information in this order.

/s/ Donald H. Harper
for

David H. Boulter
Director of Operations
Aviation System Standards

Distribution: Aviation System Standards
Flight Inspection Operations Crewmembers

Initiated By: Aviation System Standards
Flight Inspection Operations
Technical Support Team

This Page Intentionally Left Blank

TABLE OF CONTENTS

Page #

CHAPTER 1. Introduction

1.10 Purpose 1-1
1.11 Distribution 1-1
1.12 Cancellations 1-1
1.13 Background 1-1

CHAPTER 2. Flight Inspection Crew Duties and Responsibilities 2-1

CHAPTER 3. Special Requirements 3-1

CHAPTER 4. Flight Inspection Types, Priorities, Intervals, Procedures 4-1

CHAPTER 5. Facility Status Classification, Notices to Airman (NOTAM), Records, and Reports 5-1

CHAPTER 6. Flight Inspection of Instrument Flight Procedures 6-1

CHAPTER 7. Lighting Systems 7-1

CHAPTER 8. Communications 8-1

CHAPTER 9 – 10 ..... (Reserved)

CHAPTER 11. Rho-Theta Systems 11-1

CHAPTER 12. Radio Beacons 12-1

CHAPTER 13. Area Navigation (RNAV) 13-1

CHAPTER 14. Radar 14-1

CHAPTER 15. Instrument Landing System (ILS) 15-1

CHAPTER 16. Microwave Landing System (MLS) 16-1

CHAPTER 17 – 19 ..... (Reserved)

CHAPTER 20. Flight Inspection of VFR Aeronautical Charts 20-1

TABLE OF CONTENTS
continued

Page #

CHAPTER 21. Helicopter ..... (Reserved)

CHAPTER 22. Flight Inspection of Expanded Service Volume (ESV) for Ground-Based Navigational Aids 22-1

CHAPTER 23. Radio Frequency Interference Detection (RFI) 23-1

APPENDIX 1. Supplemental Information A1-1

APPENDIX 2. Formulas A2-1

APPENDIX 3. Microwave Scanning Beam Landing System (MSBLS) Procedures A3-1

APPENDIX 4. Frequency Spectrum A4-1

APPENDIX 5. Map Interpretation A5-1

APPENDIX 6. UHF Homing Beacons A6-1

APPENDIX 7. Radio Telemeter Theodolite (RTT) Calibration A7-1

APPENDIX 8. Hawker/ Sierra Database Management (Bae-800) A8-1

APPENDIX 9. AFIS Operations With Differential Global Position System (DGPS) Truth System A9-1

APPENDIX 10. General Operation Procedures A10-1

CHAPTER 1. INTRODUCTION

1.10 PURPOSE. This order contains detailed operating procedures, as well as supplemental job aids to assist crewmembers in the successful execution of the flight inspection mission. This order applies to the flight inspection of all National Airspace System (NAS) and Department of Defense air navigation services and instrument flight procedures.

1.11 DISTRIBUTION. This order is distributed to offices in the Flight Inspection Operations Group in Aviation Systems Standards, including all Flight Inspection Offices, as well as special military addressees.

1.12 CANCELLATIONS

a. **Notice 8200.24**, Change to Order VN200 8240.52, Appendix 10, Database Management, dated February 15, 2006.

b. **Notice 8200.26,** Interim Changes to Order VN200 8240.52, dated April 7, 2006.

c. **Notice 8200.28,** Radio Beacons, Order VN200 8240.52, Chapter 12, dated May 15, 2006.

d. **Notice VN200 8200.30,** DME/ DME File Process, dated June 15, 2006.

1.13 BACKGROUND. Flight inspection is a complex job that necessitates detailed explanations of standard operating procedures and inclusion of supplemental job aids. This order is designed for all crewmembers to facilitate that necessity. Order 8200.1, United States Standard Flight Inspection Manual, was the main reference for compiling the data for this order; therefore, there are many duplications of verbiage. If there is a conflict between the two orders, FAA Order 8200.1 will take precedence.

1.14 DEFINITIONS. This manual contains policy statements and guidance material. Directive verbs are used.

a. **Use MUST** when an action is **mandatory.**

b. **Use WILL** when it is **understood the action will be taken.**

c. **Use SHOULD** when an action is **desirable but not mandatory.**

d. **Use MAY** when an action is **permissible.**

1.15 UNIT OF MEASUREMENT. Unless otherwise stated, the following references are used throughout this order:

Term(s)	**Referenced to**
Mile	Nautical Miles
Airspeeds and Ground Speeds	Knots
Bearings, Headings, Azimuths, Radials Direction Information and Instructions	Magnetic North
RNAV Tracks	True North
Altitudes	Absolute Altitude True Altitude

CHAPTER 2. FLIGHT INSPECTION CREW DUTIES AND RESPONSIBILITIES

TABLE OF CONTENTS

Paragraph *Title* *Page*

2.10 AUTHORITY & RESPONSIBILITY 2-1
a. Pre-Mission Procedures 2-1
(1) PIC Duties 2-1
(2) SIC Duties 2-1
(3) Mission Specialist Duties 2-2

b. Mission Procedures 2-3
(1) Flight Inspection Coordination 2-3
(2) Data Validity 2-3
(3) Pilot & Co-Pilot Crew Procedures 2-3
(4) Mission Specialist Procedures 2-4

c. Post-Mission Procedures 2-5
(1) Post Mission Briefing and Coordination 2-5
(2) Records and Reports 2-5

This Page Intentionally Left Blank

CHAPTER 2. FLIGHT INSPECTION CREW DUTIES AND RESPONSIBILITIES

2.10. AUTHORITY & RESPONSIBILITY. The flight inspector's basic authority and responsibilities are outlined in FAA Order 8200.1, Chapter 2. Detailed responsibilities broken down by crew duty position are outlined in this chapter.

a. Pre-Mission Procedures. Prior to departing on a flight inspection mission, the following must be accomplished:

(1) PIC Duties:

(a) Ensure that all necessary pre-mission briefings, flight release, and coordination are accomplished.

(b) Brief aircrew, to include flight inspection specific profiles

(c) Obtain flight release from Flight Inspection Central Operations

(d) Coordinate as necessary with Technical Operations

(e) Coordinate as necessary withAir Traffic

(f) Conduct safety briefing

(g) Comply with any additional requirements of TI 4040.50

(h) Ensure that all documentation necessary to accomplish special flight inspection is aboard the aircraft (e.g., special requests and procedures packages).

(i) Check publications IAW Chapter 4, Paragraph 4.34. The PIC may delegate this responsibility to SIC or Mission Specialist.

(2) SIC Duties: Perform those duties as assigned by the PIC.

(3) Mission Specialist Duties. On board the aircraft assigned the Mission Specialist will:

(a) BEFORE DEPARTURE

1 Ensure the operational status of the aircraft Flight Inspection System (FIS) and associated equipment to support the scheduled mission, i.e., plotter/ recorder, oscilloscope, receivers, spectrum analyzer, television positioning system, RFI tracking equipment, etc.

2 Review the Aircraft Flight Log (AFL), VN Form 4100-8, for aircraft equipment discrepancy write-ups, and recent maintenance actions that might impact the FIS capability.

3 Verify that current navigational aid facility data and AFIS software are available and loaded into the AFIS memory.

4 Ensure that necessary auxiliary equipment and supplies are operational and stowed aboard the aircraft to support the scheduled mission.

5 Ensure that all documentation required to support the scheduled mission is aboard the aircraft.

6 Ensure the calibration book is aboard the aircraft and is current.

7 Check escape hatches

8 Check flight inspection equipment circuit breakers

9 Check oxygen mask

10 Conduct AFIS self-test

11 Stow movable work surfaces

12 Clear cabin aisle

13 Secure seatbelt/ shoulder harness

14 Brief trainee/ passenger

15 Assist the PIC as directed

(b) BEFORE LANDING

1 Stow moveable work surfaces

2 Secure cabin

3 Secure seatbelt/shoulder harness

b. Mission Procedures. The following procedures must be accomplished during a flight inspection mission:

(1) Flight Inspection Coordination. When conducting flight inspection operations in controlled airspace, proper coordination is imperative for safe and efficient operations. Specific requirements for coordination with air traffic are contained in FAA Order 8240.41, Flight Inspection/ Air Traffic Coordination. Additional guidance is provided in FAA Orders 8200.1, United States Standard Flight Inspection Manual (USSFIM), and 8240.32, Request for Flight Inspection Services. All crewmembers must comply with the requirements of these orders, using the specified terminology/ phraseology for all flight inspection activities.

(2) Data Validity. If validity of data is suspect, contact the Technical Services Sub-Team (TSS). Use data provided by TSS only.

(3) Pilot & Co-Pilot Crew Procedures:

(a) The left-seat pilot will maneuver the aircraft, assist with communications/ coordination, and maintain air traffic vigilance.

(b) The right-seat pilot will assist in looking for other air traffic, communicate and coordinate maneuvers with Air Traffic Control (ATC), program the Area Navigation (RNAV) and Flight Management System (FMS), and file flight plans.

(c) To ensure the most accurate measurement of the navigational signal-in-space, it is imperative that the aircraft be maneuvered in a smooth and stable manner. When possible, operate the aircraft coupled to the flight director and autopilot system. When viable data cannot be obtained due to weather conditions, terminate the inspection of that facility until more favorable conditions prevail.

(4) Mission Specialist Procedures are as follow:

(a) Program AFIS operations for all flight inspection measurements in coordination with the PIC/ SIC and document AFIS results. AFIS default plots on the plot control page constitute the MINIMUM recorder traces required for all inspections. If any default traces are turned off, annotate the recordings, stating the reason and that the PIC was advised.

(b) Analyze facility performance data. Results that require facility adjustment, or any out-of-tolerance results, should be coordinated with the PIC before reporting to facilities maintenance.

(c) Conduct flight inspection air/ ground communications with facility maintenance personnel as required to complete mission.

(d) Ensure all parameters requiring AFIS operation during the flight inspection mission are completed to fulfill the requirements listed in Order 8200.1 and appropriate directives.

(e) Flight inspection without a back-up flight inspection navigational receiver is permissible; however, FAA maintenance must defer the discrepancy before the aircraft is operated. Ensure all receivers required for the mission pass the self-test. Back-up receivers should be operational before a commissioning inspection is attempted.

(f) During Radio Frequency Interference (RFI) missions, the MISSION SPECIALIST will operate the RFI tracking equipment, relaying bearing information to the pilots, allowing them to maneuver the aircraft toward the area generating the RFI.

(g) Aural verification of ILS or VTAC transmitted identification is required. The Pilot may perform the check, but the Mission Specialist retains responsibility. Aural monitoring is required as follows:

1 Localizer ILS-1 maneuvers (See Chapter 15) in worst case configuration during all inspections, in normal configuration during Periodic inspections, and on all runs for Standard Service Volume and Expanded Service Volume during Commissioning and Reconfiguration inspections.

2 VOR/ TAC (See Chapter 11)during coverage inspections and on at least one procedural radial or ARR on all types of inspections.

c. Post Mission Procedures

(1) Post Mission Briefing and Coordination:

(a) The PIC must ensure that all flight inspection results and facility performance parameters are provided to the responsible facility maintenance and/ or air traffic personnel. Every effort should be made to restrict, rather than remove from service, a facility or instrument procedures when out-of-tolerance conditions are found. The PIC must take Notices to Airmen (NOTAM) action as necessary. This is accomplished through the Flight Inspection Operations Center and National Flight Procedures Office, or appropriate military authority if applicable. For specific guidance see Chapter 5, Paragraph 5.12. If a NOTAM is issued, the PIC must verify issuance within 24 hours..

(b) The Mission Specialist must participate in, or conduct briefings with facility maintenance personnel regarding the technical aspects of facility performance when required.

(2) Records and Reports. After flight inspection of a navigational aid facility, record and report the results in accordance with Order 8200.1; Order 8240.36, Flight Inspection Report Processing System; and guidance specified by the Flight Inspection Policy Team. The division of post mission responsibilities will be as follows:

(a) The PIC must:

1 Determine the acceptability of procedure packages and decide if the navigational aid supported the instrument procedure.

2 Ensure all Aircraft Log Book (ALB) entries reflect aircraft status, and Daily Flight Logs (DFLs) accurately reflect facility status and the flight inspection work completed.

3 Ensure all Facilities and Equipment (F&E) job numbers and/ or reimbursable Memorandum of Agreement (MOA) information is annotated on the DFL.

4 Submit a flight inspection report for those facilities that do not require recordings or input from the Mission Specialist, i.e., radar, NDB facilities, etc.

5 Sign all the Flight Procedures Control Forms (PCs), the Expanded Service Volume Form 6050-4, and other appropriate documents and FAX them, along with the DFL, to Flight Inspection Central Operations (FICO).

(b) The SIC must perform duties as directed by the PIC to assist in the completion of the Flight Inspection Itinerary.

(c) The Mission Specialist must:

1 Ensure all recordings and supporting documentation are complete and accurately reflect facility performance.

2 Complete a flight inspection report for the co-signature of the PIC in accordance with Order 8240.36 for those facilities that require recorded data.

3 Ensure all flight inspection recorded data are properly annotated and forwarded to Technical Services Sub-Team (TSS) in accordance with Order 8200.1, Chapter 5.

4 Perform other duties as directed by the PIC to assist in the completion of the Flight Inspection Itinerary.

(d) Facility Data Sheet. When flight inspection data results require a change in the Airport/ NAVAID (AVNIS) Database or the National Flight Data Center (NFDC) Database, (i.e. change in facility status, restrictions, receiver checkpoints, etc), complete form 8240-20 IAW Appendix 2 of Order 8240.52, Aeronautical Data Management.

CHAPTER 3. SPECIAL REQUIREMENTS

3.10 INTRODUCTION. This chapter describes the concept for the special requirements of the aircraft, flight inspection crewmembers, and airborne and ground support equipment used for flight Inspection.

3.11 AIRCRAFT. Aviation System Standards and the U.S. Military must identify specific requirements based on their operational needs. Appropriately equipped aircraft and helicopters, from service proponent or other sources, may be used when required to complete flight inspection requirements. The general characteristics of a flight inspection aircraft are listed in FAA Order 8200.1, Chapter 3, Paragraph 3.11.

3.12 FLIGHT INSPECTION CREWMEMBERS No person may serve as Pilot-In-Command (PIC) or Mission Specialist of a Flight Inspection aircraft engaged in flight inspection activities unless they meet the following requirements:

a. Each person must have completed the prescribed Flight Inspection Training. They must hold a Certificate of Authority, FAA Form 8430.9.

b. Meet recent flight experience requirements of TI 4040.50, Aviation System Standards Operations Manual.

c. The appropriate Manager/ Chief Pilot must determine a crewmember's recency of experience and ability to accomplish the assigned scheduled mission requirements.

3.13 AIRBORNE AND GROUND SUPPORT flight inspection equipment must be calibrated to a standard traceable to the National Institute of Standard and Technology.

a. Automated Flight Inspection System (AFIS). AFIS with GPS position updating is to be considered the primary flight inspection method. See TI 4040.55, AFIS Technician's User Manual, and 4040.56, AFIS Pilot Users Manual, for AFIS operation.

b. The calibrated flight inspection receivers are the standard and must be used for all applicable evaluations of flight inspection tolerances.

c. Other AVN Approved Systems (Portable/Utility Class) and Methods (Theodolite, RTT, DGPS or Manual) may be used unless prohibited by other guidance for flight inspection. These systems/ methods must not be used solely to bypass the need for facility data of sufficient accuracy to support AFIS. Portable/ Utility class equipment, installed in aircraft for the purpose of conducting flight inspections, must be installed in accordance with AVN approved procedures.

CHAPTER 4. FLIGHT INSPECTION TYPES, PRIORITIES, INTERVALS, PROCEDURES

TABLE OF CONTENTS

SECTION 1. TYPES AND PRIORITIES OF FLIGHT INSPECTIONS

Paragraph	*Title*	*Page*
4.10	INTRODUCTION	4-1
4.11	SPECIAL FLIGHT INSPECTIONS	4-1
	a. USAF ATCALS	4-1
	b. USAF Deployable (Mobile) ATCALS	4-1
	c. Unapproved Facilities	4-1
	d. Facility Removal and Replacement	4-1
	e. New or Modified Equipment Testing	4-1
	f. Radio Frequency Interference (RFI)	4-1
	g. After Accident Inspections	4-1
	h. Reconfiguration	4-2
	i. Inspections of Shipboard TACAN(s)	4-2
4.12	SURVEILLANCE	4-2
4.13	PRIORITIES OF FLIGHT INSPECTIONS	4-3

SECTION 2. FREQUENCY OF PERIODIC FLIGHT INSPECTIONS

4.20	INTRODUCTION	4-3
	a. NAVAID(s)	4-3
	b. Periodic Inspections	4-3
	c. Progressive Inspections	4-4
4.21	EXTENSION OF SERVICES OVERDUE PERIODIC INSPECTION	4-4
4.22	NAVAID(s) TEMPORARILY OUT OF SERVICE	4-4
4.23	RHO-THETA RECEIVER CHECKPOINTS	4-4
4.24	PERIODIC FLIGHT INSPECTION INTERVALS	4-5

Paragraph *Title* *Page*

SECTION 3. GENERAL FLIGHT INSPECTION PROCEDURES

4.30 INTRODUCTION 4-5

4.31 REQUEST FOR FLIGHT INSPECTION 4-5
a. Status of Equipment 4-5
b. Notification 4-5

4.32 PREFLIGHT INSPECTION PREPARATION 4-6
a. Facilities Maintenance Personnel 4-6
b. Flight Personnel 4-6

4.33 FLIGHT INSPECTION 4-7
a. Operator Proficiency 4-7
b. Standby Equipment 4-7
c. Standby Power 4-7
d. On-Station Philosophy 4-7
e. Adjustments 4-8
f. Incomplete Inspections 4-8
g. Hazardous and Misleading Information (HMI) 4-8

4.34 ANALYSIS AND EVALUATION 4-9
a. Flight Inspection Data 4-9
b. Copies of Flight Inspection Recordings 4-9
c. VFR Aeronautical Chart Inspectors 4-9
d. Alingment Convention 4-9
e. System Evaluations 4-9
f. Publications Review 4-9

4.35 POST FLIGHT INSPECTION ACTIONS 4-10

CHAPTER 4. FLIGHT INSPECTION TYPES, PRIORITIES, INTERVALS, PROCEDURES

SECTION 1. TYPES AND PRIORITIES OF FLIGHT INSPECTIONS

4.10 INTRODUCTION. Official flight inspections are of five basic types as described in the following paragraphs of FAA Order 8200.1: Site Evaluation (Paragraph 4.11), Commissioning (Paragraph 4.12), Periodic (Paragraph 4.13), Special (Paragraph 4.14), and Surveillance (Paragraph 4.15).

4.11 SPECIAL FLIGHT INSPECTIONS are further divided as follows:

a. USAF ATCALS evaluation requirements

b. USAF Deployable (Mobile) ATCALS (DATCALS)

c. Unapproved Facilities

d. Facility Removal and Replacement

e. New or Modified Equipment Testing

f. Radio Frequency Interference (RFI)

g. On-Site Requests

h. After Accident inspections are unique, special inspections and require special attention. This inspection is performed at the request of the accident coordinator/ investigator to verify that system performance is satisfactory and continues to support instrument flight procedure(s).

(1) Response. This inspection has a priority of 1a and should be accomplished as soon as possible. Tasking will come from Flight Inspection Central Operations (FICO).

(2) Preflight Requirements. The flight inspector will obtain the following information:

(a) Equipment configuration at the time of the accident, i.e., the receiver(s), transmitter(s), or radar channel(s) in operation.

(b) Instrument flight procedure(s) used.

(c) Any additional information that may aid in the inspection analysis.

(3) Inspection Procedure(s)

(a) Coordinate with maintenance to configure the system as indicated in Paragraph g(2)(a).

(b) Complete periodic checklist requirements. Only the equipment and instrument flight procedures used by the accident aircraft need to be checked. A VOR or TACAN orbit alignment is not required. Do not make any facility adjustments during the after-accident inspection. Any adjustments require a separate special inspection.

(c) If a system or procedure has no periodic inspection requirements, evaluate performance in the area in which the accident occurred.

(d) Complete any additional items requested by maintenance, air traffic control personnel, the accident coordinator, or the commander at a military facility.

(e) Where an accident involves contact with the terrain or a manmade obstruction, confirm the procedural controlling obstruction by map study or flight evaluation.

(4) Dissemination of After Accident Information. All flight inspection findings or other pertinent accident investigation information must be restricted to the accident coordinator/ investigator, maintenance, and air traffic personnel. Results of the flight inspection must be given to the FAA Inspector-in-Charge (IIC) as soon as possible. A flight inspection report must be filed in accordance with current directives.

i. Reconfiguration

j. Inspections of Shipboard TACAN(s)

Further specifics about each of these special inspections can be found in FAA Order 8200.1, Chapter 4, Paragraph 4.14.

4.12 SURVEILLANCE. This inspection encompasses spot checks of individual components observed during normal flight operations. No reporting is required unless a discrepancy is found. An out-of-tolerance or unsatisfactory condition found on a surveillance inspection must require a Daily Flight Log entry, report, and, if necessary, NOTAM action.

Surveillance of Aeronautical Services. During the course of routine flight operations, flight inspection personnel must be alert for items which are unusual, substandard, or possibly hazardous.

Inspections may include, but are not limited to, the following:

a. Condition of runways, taxiways, and ramp areas.

b. Runway, taxiway paint markings, and position signs missing or deteriorated to the extent that visual guidance is obscured or missing.

c. Conditions which may lead to runway incursion by aircraft, vehicles, or pedestrians.

d. Construction activity at airports which is a hazardous condition or might affect NAVAID performance.

e. New obstructions in the instrument approach area which might become the controlling obstruction or constitute a hazardous condition.

f. Brush or tree growth obstructing the view of approach lights.

g. Obscured or broken runway or obstruction lights.

h. Other hazardous situations (e.g., bird hazards).

i. Air traffic services (e.g., clearances, flight plans, communications).

j. Other services (e.g., weather bureau services or other airport support services).

4.13 PRIORITIES OF FLIGHT INSPECTIONS. The FICO must use the priorities listed in FAA Order 8200.1, Chapter 4, Paragraph 4.16 to determine mission support when two or more requirements are competing for limited flight inspection resources. Any questions regarding scheduling or priorities should be addressed to the FICO.

SECTION 2. FREQUENCY OF PERIODIC FLIGHT INSPECTIONS

4.20 INTRODUCTION. This section prescribes the minimum frequency of periodic flight inspections. More frequent inspections may be made when deemed necessary or as requested by the owner or organization responsible for the operation of the facility. The FICO has the responsibility for tracking and scheduling to ensure inspections are completed with required timeframes. Any abnormalities should be brought to the FICO's attention for resolution.

a. NAVAID(s) such as VORTAC, VOR/ DME, ILS, MLS, etc., must be flight inspected as a service with the same due date and inspection interval for all component facilities.

b. Periodic inspections are considered complete when all scheduled checks are accomplished except as noted below. When flight inspection of all Standard Instrument Approach Procedures (SIAP(s)) cannot be completed within the periodic window and extension, the periodic inspection may be documented as complete, as directed by the FICO Manager in coordination with the PIC. Special inspections must be established to ensure the remaining SIAP(s) are completed. In the event the SIAP(s) are not checked by the end of the periodic window/ extension, the FICO must initiate NOTAM action to remove them from service. The SIAP(s) must be restored by a special flight inspection.

c. Progressive Inspections. The requirements for periodic inspections are specified in a checklist in each chapter of FAA Order 8200.1. Partial or progressive inspections (i.e., inspections completed over several consecutive or nonconsecutive days) may be conducted, provided all of the individual periodic checklist items are satisfied within the due date window.

4.21 EXTENSION OF SERVICES OVERDUE PERIODIC INSPECTION. When the inspection of a commissioned NAVAID or SIAP is not completed within the due date window, the window may be extended.

a. The periodic flight inspection window for a ground NAVAID may be extended an additional seven (7) calendar days if the FICO and regional facility maintenance engineering agree that no conditions exist which could adversely affect the safety of flight.

b. The periodic flight inspection window for all SIAP(s) may be extended an additional thirty (30) calendar days providing:

(1) A review of the SIAP is accomplished by a Flight Inspector and;

(2) The FICO, by coordination with regional or local airport personnel can determine that no known environmental (i.e., construction or natural growth) changes have occurred which could adversely affect the procedure and;

(3) The National Flight Procedures Office agrees that an extension of the window will not adversely affect the safety of flight.

4.22 NAVAIDS TEMPORARILY OUT OF SERVICE

Standby Equipment or Associated NAVAID. When flight inspection of standby equipment or an associated NAVAID is required but cannot be accomplished, the periodic inspection must be considered complete if the standby equipment or associated NAVAID is out-of-service (awaiting parts, etc.), or removed from service (due to an uncorrectable discrepancy, etc.) The standby equipment or associated NAVAID must be restored to service by the successful completion of a flight inspection which satisfies all periodic requirements (including monitors, where applicable).

4.23 RHO-THETA RECEIVER CHECKPOINTS. When periodic or special flight inspections include ground or airborne receiver checkpoints but cannot be completed due to weather, aircraft landing limitations, ATC, etc., the inspection will be considered complete. The following actions will be taken:

a. The flight crew will document the required inspection as complete on both the Daily Flight Log (DFL) and the flight inspection report. Enter in remarks those checkpoints that were not checked.

b. The FICO will:

(1) Schedule a special inspection to complete the checkpoints within the established facility periodicity.

(2) Take appropriate NOTAM action to remove the receiver checkpoints from service if the special inspection is not completed within the established facility periodicity. Notify the airport manager that the ground receiver checkpoints must be removed or covered.

4.24 PERIODIC FLIGHT INSPECTION INTERVALS. The schedule for periodic flight inspections must be in accordance with Table 4-2 and other parameters outlined in FAA Order 8200.1.

SECTION 3. GENERAL FLIGHT INSPECTION PROCEDURES

4.30 INTRODUCTION. Sequence of events encountered by the flight inspector in the performance of the flight inspection mission is generally as follows:

a. Request for flight inspection

b. Preflight preparation

c. Actual flight inspection

d. Analysis and evaluation

e. Post flight review and reporting

4.31 REQUEST FOR FLIGHT INSPECTION. Site, commissioning, and some special flight inspections must be requested by authorized personnel. Requests are not required for periodic flight inspections. Any request for a flight inspection should be directed to the FICO and not to a flight inspection crewmember.

a. Status of Equipment. Initiate the flight inspection request when the inspection requirement is known and finalize the schedule when the facility is ready for flight inspection.

b. Notification. The flight inspector or central scheduling and dispatch facility must notify the appropriate facility maintenance personnel of the estimated time of arrival (ETA) of the flight inspection aircraft. As much advance notification as possible must be provided for a site evaluation, commissioning inspection, periodic with monitors, or any other inspections requiring maintenance support. An ILS periodic inspection without monitors does not require pre-coordination with maintenance personnel. This inspection should be conducted on the transmitter in operation. If an out-of-tolerance condition is found, notify maintenance of the discrepancy(ies) found and, if possible, inspect the standby equipment. NOTAM(s) must be issued if discrepancies are not corrected.

4.32 PREFLIGHT INSPECTION PREPARATION. A thorough and complete understanding between Facilities Maintenance personnel and the flight inspection crew is essential for a successful flight inspection. The flight inspector and the person in charge of the facility are jointly responsible for the required coordination before, during, and after the flight inspection. The flight inspector will brief the Facilities Maintenance personnel of intended actions prior to commissioning flight inspections and for special circumstances.

Prior to each VFR Aeronautical Chart flight inspection mission, the inspector(s) will meet with the NACO VFIP coordinator and cartographers to discuss any issues pertinent to the inspection.

a. Facilities Maintenance Personnel. For inspections involving Facilities Maintenance personnel, efficient and expeditious flight inspections require them to perform the following preflight preparations and actions:

(1) Provide adequate two-way radio communications equipment and power source at facility sites. Two-way communication should be provided by flight inspection when a theodolite or RTT is required.

(2) Ensure that all facility equipment is calibrated in accordance with technical orders.

(3) Ensure personnel will be available to make corrections and adjustments.

(4) Provide transportation to move flight inspection equipment and personnel.

(5) Provide accurate facility data for new or relocated facilities.

b. Flight Personnel. The following actions must be accomplished prior to the flight inspection:

(1) Ensure that all required flight inspection equipment is calibrated and operational.

(2) Brief Facilities Maintenance personnel, as required

(3) Conduct crew briefing.

(4) Obtain maps, charts, equipment, data sheets, etc.

(5) Review the status, limitations, and characteristics of the facility. Ensure that all publications and records agree with the results of the latest flight inspection, and all applicable restrictions are accurate.

(6) Brief the air traffic control (ATC) personnel, when required, about the areas and altitudes to be flown during the flight inspection maneuvers and of possible transmitter changes.

4.33 FLIGHT INSPECTION. Perform the flight inspection in accordance with the procedures in this order.

a. Operator Proficiency. During flight inspections, qualified personnel will be assigned so operator deviations will not be confused with equipment performance.

b. Standby Equipment. It is necessary to know which system or transmitter is operating so the performance of each can be determined.

(1) When one unit of a dual equipped facility is found out-of-tolerance, it must be identified and removed from service. The unit can be identified as transmitter number 1 or 2, channel A or B, serial number, etc.

(2) Some inspections may only require checking one component of a system. The details for each type of facility are included in the appropriate facility checklists.

c. Standby Power

(1) The flight inspector must check the facility on standby power during a commissioning flight inspection if standby power is installed. If a standby power system is installed after the commissioning flight inspection, the flight inspector must check the facility on standby power during the next regularly scheduled periodic inspection. The flight inspector must make comparative measurements to ensure that facility performance is not derogated on the standby power system and that all tolerance parameters for the specific inspection are met. Standby power checks are not required on facilities powered by batteries that are constantly charged by another power source.

(2) It is not necessary to recheck a facility when the standby power source is changed.

d. On-Station Philosophy. Flight inspectors must assist in resolving facility deficiencies and restoring the facility to service prior to departure.

(1) Restrictions. When a facility parameter does not meet established tolerances or standards, the flight inspector must perform sufficient checks to determine the usable area of the facility. This data will be the basis of restrictions, NOTAM(s), and procedural redesign.

(2) Spectrum Management Restrictions. Facilities assigned a spectrum management restriction will be classified as “Restricted” and must be identified on the Facility Data Sheet. This restriction remains in effect even when the facility performance indicates no interference exists. Do not remove published spectrum management restrictions based on flight inspection results.

e. Adjustments. Requests for adjustment must be specific. The flight inspection crew will furnish sufficient information to enable maintenance personnel to make adjustments. Adjustments which affect facility performance must be rechecked by flight inspection. Flight inspection certification must be based on facility performance after all adjustments are completed.

f. Incomplete Inspections. When an inspection on a commissioned facility must be halted with the equipment in an abnormal condition due to aircraft malfunction, weather, etc., maintenance personnel and the flight crew must discuss the facility condition and the remaining checks. If the facility maintenance handbooks allow adjustments of the facility parameter without flight check, and adequate references provide the ability to return to a previously certified setting, the equipment may be returned to service. The inspection will be classified as incomplete until the remainder of the check is completed. When a prescribed inspection checklist item cannot be adjusted within tolerance, the inspection will be terminated, facility status changed to unusable, and the inspection classified as incomplete until the remainder of the checks are completed.

g. Hazardous and Misleading Information (HMI). During some flight inspections, ground equipment is configured in abnormal conditions radiating false information that may be misleading to the pilot. Some of these conditions do not produce a “flag” indication. For ILS facilities, studies have shown that the most effective warnings to the pilot are those that produce a flag. IAW FAA Order 6750.49, Maintenance of ILS Facilities, FAA localizers are required to be turned OFF when glide slopes are transmitting HMI, and glide slopes must be OFF when the localizer is producing HMI. This practice does not apply to routine monitor checks (PM). When HMI is applicable, a NOTAM must be in place. Someone other than the NOTAM originator will verify that the NOTAM is active. Checks requiring these configurations are identified with the following placard:

WARNING

HAZARDOUSLY MISLEADING INFORMATION

Misleading information is produced by this configuration.
Ensure NOTAM is active.
Monitor ATC communications for improper approach clearance to other aircraft.

WARNING

Flight inspection crews must check for applicable NOTAM(s), remind Maintenance of required shutdowns as needed, and monitor ATC communications to other aircraft. If ATC clears an aircraft to use the NAVAID, immediately notify them of the facility’s unusable status.

4.34 ANALYSIS AND EVALUATION

a. Flight inspection data must be analyzed and evaluated by flight inspection using the tolerances specified in FAA Order 8200.1, United Stated Standard Flight Inspection Manual. Recordings made during the flight inspections are the permanent records of facility performance.

b. Copies of flight inspection recordings for engineering analysis may be obtained from the FICO Technical Services Sub-Team (TSS) records room. This is a limited capability and should not be used routinely.

c. VFR Aeronautical Chart inspectors must record their notes on a NACO-annotated VFR chart field sheet. Field sheets are considered source data and must be retained and archived by NACO.

d. Alignment Convention. The alignment error of omni-directional type facilities (VOR, TACAN, DF, NDB, ASR, etc.) must be computed through algebraic addition. The azimuth reference (AFIS, theodolite, map) must always be assigned a Positive (+) value, and the azimuth determined by the ground facility must always be assigned a Negative (-) value. Thus, with a received VOR radial value of 090.5 and an AFIS/ map position of 090.0, the facility error would be –0.5°. Alignment errors may also be referred to as clockwise (positive) and counterclockwise (negative).

e. System Evaluations. Flight inspectors must make maximum use of the capability of the flight inspection system. When a special inspection encompasses only one part of a system, i.e., VTAC/ V, ILS/ G, or MLS/ A, the other parts of the system, i.e., VTAC/ T, ILS/ L, Markers, MLS/ E, and DME must be recorded and analyzed on a surveillance basis during appropriate maneuvers. Recorder traces that are set by default to the ON position should not be turned OFF unless they obscure other traces. No additional checks are needed to inspect the additional components, unless an out-of-tolerance condition is found.

f. Publications Review. As part of a periodic inspection, the flight inspector must review the Airport/ Facility Directory (A/ FD), DOD IFR Supplement, U.S. Government-produced Approach Charts, and En Route Charts applicable to the facility/ procedure. The information available to users must be compared with facility data sheets and chart legends to ensure accuracy of presentation. Report facility data discrepancies to FICO TSS data department and charting errors to the National Flight Procedures Office for correction.

4.35 POST FLIGHT INSPECTION ACTIONS. Upon completion of the flight inspection, the flight inspection crew must perform the following actions:

a. Brief facilities maintenance personnel concerning results of the flight inspection, if applicable. Flight inspection must report all facility outages to appropriate personnel.

b. Determine facility status. Flight inspection must assign a status for the facility (see Chapter 5). Flight Inspection must also notify the appropriate personnel of the facility status.

c. Prescribe the issuance and/or cancellation of NOTAM(s). The flight inspector must prescribe the issuance and/or cancellation of NOTAM(s) based on the flight inspection (see Chapter 5).

d. Prepare flight inspection reports. Flight inspection reports must be accurate and describe facility performance and characteristics. Reports must be completed in accordance with FAA Order 8240.36, Flight Inspection Report Processing System, (latest edition).

e. Ensure flight information is published. For new or changed data the flight inspector must provide information for publication to the FICO TSS data department. The FICO TSS data department will notify the National Flight Data Center.

(1) Receiver Checkpoints. The following information must be provided for receiver checkpoints:

(a) Airport name

(b) Bearing in degrees magnetic from the VOR/ TACAN

(c) Location and description

(d) Distance and altitude

NOTE: Examples—
1. Ground Checkpoint. Central City, Utah, (Municipal): 130°, 4.5nm, runup pad Rwy 14.

2. Airborne Checkpoint. Mudville, Ohio, (Jones): 148°, 5.7nm, over int Rwys 20 and 13; 3,300 .

(2) VOR Test Facilities (VOT). The following information must be provided for a VOT:

(a) Facility name (and airport name)

(b) VOT frequency

(c) Type facility (area or airport)

(d) Information describing usable area

f. VFR Aeronautical Charts

(1) Consolidate and transfer all field notes to a clean chart, provided by NACO, for use by NACO cartographers.

(2) The consolidated notes will be turned over to NACO cartographers. Any issues arising from the inspection should be resolved with the NACO VFIP manager and cartographers.

This Page Intentionally Left Blank

CHAPTER 5. FACILITY STATUS CLASSIFICATION, NOTICES TO AIRMEN (NOTAM), RECORDS, AND REPORTS

TABLE OF CONTENTS

Paragraph *Title* *Page*

SECTION 1. FACILITIES STATUS CLASSIFICATION AND NOTICES TO AIRMEN (NOTAM)

5.10 INTRODUCTION 5-1

5.11 FACILITY STATUS CLASSIFICATION 5-1
a. International Facilities 5-1
b. Facility Coverage in Limited Areas 5-2

5.12 NOTAM(s) 5-2
a. General 5-2
b. Facility NOTAM(s), (NOTAM D) 5-2
c. FDC NOTAM(s) 5-3
d. Facilities Not Requiring NOTAM(s) 5-3
e. Expanded Service Volume (ESV) Facilities 5-3
f. Out-of-Tolerance Standby Equipment 5-3
g. NOTAM(s) on Military Facilities (including ships) 5-4
h. Preparation of NOTAM(s) 5-4
i. Facility Restrictions 5-4
j. NOTAM Examples 5-5
k. Required Advisories for Local NOTAM(s) 5-7

SECTION 2. RECORDS AND REPORTS

5.20 INTRODUCTION 5-8

5.21 RECORDS 5-8
a. General Information 5-9
b. Facility Data Sheets 5-10

5.22 REPORTS 5-10
a. Military Facilities 5-10
b. Reports Submitted by Military Flight Inspectors 5-11
c. VFR Aeronautical Chart Field Sheet 5-11

This Page Intentionally Left Blank

CHAPTER 5. FACILITY STATUS CLASSIFICATION, NOTICES TO AIRMEN (NOTAM), RECORDS, AND REPORTS

SECTION 1. FACILITY STATUS CLASSIFICATION AND NOTICES TO AIRMEN (NOTAM)

5.10 INTRODUCTION. Facility status classification and NOTAM(s) will indicate restriction(s) to the expected service volume and use of these facilities. This classification is directed only to the maintenance and/or operating agency. The NOTAM advises the user of any restriction to facility usage.

5.11 FACILITY STATUS CLASSIFICATION. Flight inspection will assign one of the following status classifications:

- **Unrestricted**
- **Restricted:** (areas must be clearly defined as unusable in a NOTAM).
- **Unusable:** (a NOTAM must be issued for the facility defining it as unusable).

a. International Facilities. The FAA performs flight inspection of international facilities on a contract or agreement basis and for NAVAID(s) supporting U.S.-controlled instrument procedures. International facilities are maintained using the manufacturer's instructions manual and may have no procedures for accomplishing some checks required by this order. Checks performed under these conditions, while meeting the owning nation's procedural and maintenance certification requirements, do not encompass all checklist items required of U.S. facilities. Special procedures apply for checks performed under these conditions.

(1) For facilities for which the FAA has flight inspection responsibility, and **all checklist items** appropriate for the inspection **have been completed**, the flight inspector must assign a facility status.

(2) For facilities for which the FAA has flight inspection responsibility, and all checklist items appropriate for the inspection have **not been completed,** the flight inspector must discuss the uncompleted items with the facility manager and annotate the report with a statement that the assigned status applies only to the ICAO Annex 10 signal requirements in the as-left configuration. The assigned facility status must be as applied to usability.

(3) If the check does not meet the requirements of this order or ensure the standards of ICAO Annex 10, the host nation must assign the facility status.

(4) For facilities inspected only to the extent that they support U.S. instrument procedures, no status must be assigned, and the report must be annotated as to the limited inspection.

(5) If any checklist items are not completed, they must be listed on the report.

b. Facility Coverage in Limited Areas. When facility coverage throughout the flight inspection standard service volume cannot be checked due to inability to penetrate national borders or restricted airspace, the facility will be classified as RESTRICTED, with the report annotated as to the limited coverage flown. NOTAM and publications action will show the facility as UNUSABLE in the areas not checked.

5.12 NOTAM(s)

a. General. When a flight inspection necessitates NOTAM action, the flight inspector is responsible for initiating the NOTAM(s). All NOTAM(s), or proposed NOTAM(s), will be listed on the DFL. The flight inspector must verify within 24 hours that the appropriate NOTAM(s) were issued, amended, or cancelled. The inspector must verify that NOTAM(s) are published in the appropriate agency publication.

b. Facility NOTAM(s), (NOTAM D). The inspector must immediately initiate NOTAM action whenever a facility restriction is found or revised. Follow the procedures listed here when initiating NOTAM action for facilities that are part of the NAS.

NOTE: "High Impact" airports are generally the OEP airports, but for the purposes of this Order, they are as directed by FICO, and will normally correspond to the Operational Network (OPSNET) airports listed in Order VN200 8240.4, Daily Flight Log.

(1) Safety of Flight (critical). The flight inspector should initiate NOTAM action while airborne through a Flight Service Station (FSS), or other means as able. If the NOTAM(s) affect a High Impact airport, contact FICO as soon as practical (land if necessary).

(2) Post Flight. In a timely manner after landing, the flight inspector will pass the NOTAM and facility information to FICO. FICO will ensure the appropriate Operations Control Center (OCC) has been notified. When new facility restrictions are issued, or existing restrictions are changed or cancelled, FICO will notify the National Flight Procedures Group (NFPG). The NFPG will assess the impact on existing flight procedures.

NOTE: When a flight inspection results in new or changed facility data, the flight inspector must provide information for publication to the FICO TSS data department, initially by any means, but ultimately using FAA Form 8240-20, AVNIS Data Change Submission.

(3) NOTAM(s) Affecting High Impact Airports. Delay issuing non-critical NOTAM(s) until briefing FICO. FICO will brief Aviation System Standards Flight Inspections Operations management on the potential impact on flight operations at the affected airport(s) and, in coordination with the flight inspector, determine what further action to follow.

c. FDC NOTAM(s). Flight Data Center (FDC) NOTAM(s) must be issued if a restriction affects instrument flight procedures, approach minimums, or category (CAT) II or III authorizations. The flight inspector will initiate any flight instrument procedure NOTAM(s) through the NFPG. This should be accomplished through the FICO, which will facilitate contact between the flight inspector and the appropriate flight procedures specialist. Internal processes are in place between FICO, the National Operations Control Center and the NFPG to ensure FDC NOTAM(s) resulting from reported facility outages, flight inspection results, or restriction changes are issued. The OCC automatically notifies the NFPG when there is a facility outage or restoration. The FICO will notify the NFPG when a flight inspection results in a new or canceled facility restriction.

d. Facilities not requiring NOTAM(s). Do not issue a NOTAM to reflect restrictions found during the flight check of radar or direction finding facilities; however, review the instrument flight procedures to ensure that those requiring ground radar are amended or suspended. Coordinate this action with the procedures specialists.

e. Expanded Service Volume (ESV) Facilities. When a facility no longer supports an ESV, the facility is not restricted, but a NOTAM must be issued for the instrument flight procedures predicated on that ESV. Forward ESV data to Resource and Data Management and coordinate appropriate FDC NOTAM(s) with the NFPG or other procedures office.

f. Out-of-Tolerance Standby Equipment. Where one of two transmitters of a facility is restricted due to out-of-tolerance parameters and the other is satisfactory, the satisfactory transmitter may be operated without a NOTAM. However, NOTAM data describing the restriction must be provided to facilities maintenance personnel. In the event the restricted transmitter is used, the operating agency must issue the NOTAM.

g. NOTAM(s) on Military Facilities (including ships)

(1) The military installation commander has the final authority and responsibility for NOTAM issuance and for facility operations of all military facilities which are not part of the National Airspace System (NAS). The commander may elect to use "For Military Use Only" facilities found unsatisfactory for continued NAS usage.

(2) NOTAM(s) involving military facilities or procedures should be recommended to the appropriate military authority for the airfield, facility, or instrument procedure in question. NOTAM(s) for U.S. Army instrument procedures within the United States should be initiated through the NFPG. Any NOTAM action involving U.S. military instrument procedures or facilities overseas should be initiated through the appropriate military authority at the location involved. Military units will issue NOTAM(s) according to existing military regulations and letters of agreement with the appropriate host nation International NOTAM Office.

(3) NOTAM(s) are not issued on shipboard facilities.

h. Preparation of NOTAM(s)

(1) NOTAM(s) must include facility name, type, component, and the unusable area/ altitude. The absence of a specific altitude or distance will denote all altitudes and distances. It is important to include specific information to avoid confusion. The reason for the restriction (e.g., lack of signal, frequency interference, course structure, alignment, unlocks) serves no useful purpose and must not be included in the text of the NOTAM.

(2) Restrictions to TACAN azimuth are not included in agency publications, but are referred to the military for dissemination as they consider necessary. A copy of each NOTAM issued or recommended for TACAN azimuth restrictions must be retained in the facility file for reference during subsequent flight inspections. The NOTAM preparation for the TACAN azimuth component of a VORTAC is identical to the VOR.

i. Facility Restrictions. Every effort should be made to restrict rather than remove from service a facility, or instrument procedure, when out of tolerance conditions are found. Apply the following rules for restricted facility use:

(1) Describe the radials or bearings that are unusable.

(2) Describe the altitude and mileages that are unusable.

(3) VOR/ TACAN/ VOT/ DME/ DF/ NDB/ ASR. Describe radial/ bearing from the station in a clockwise (CW) direction, altitude in terms of **above** or **below** an MSL altitude, and distance in terms of **beyond** or **within** a nautical mile distance.

(4) Localizer/ LDA/ SDF/ TLS Azimuth. Describe laterally in terms of degrees left or right of inbound course and in nautical miles from threshold if the restriction affects the limit of usable signal closest to the threshold. Use distance in nautical miles from the antenna to describe restrictions affecting the usable distance of the facility. Describe altitude in terms of above or below an MSL altitude. Additional reference to DME distances may be used if the DME is part of the SIAP.

(5) Glide Slope/ TLS Elevation. Describe in terms of degrees left or right of inbound course and nautical miles from threshold; restrictions pertaining to altitude must be in terms of above or below an MSL altitude. Ensure the restriction correctly reflects the service volume origin. Additional reference to DME distances may be used if the DME is part of the SIAP.

(6) MLS. Describe in azimuth terms of inbound magnetic courses, using clockwise (CW) references, starting at the restricted portion closest to the inbound right-hand edge of the service volume. Describe elevation terms in degrees when restricting an entire azimuth sector and in terms of feet MSL when restricting a sector beyond a distance. Define elevation restriction affecting decision height in feet MSL. Define distances in DME.

(7) VGSI. For VGSI, describe in terms of nautical miles from threshold and/ or degrees left and right of runway centerline any areas of coverage where the facility is unusable.

(8) Published NOTAM(s) will usually omit, but may include the CW reference. This does not constitute an erroneous NOTAM. Published NOTAM(s) and restrictions must be reviewed by the flight inspector to ensure they convey the correct meaning.

j. NOTAM Examples. The following are examples of conditions and prescribed NOTAM(s):

(1) Condition 1. All components of a VORTAC are unusable in a specific sector due to out-of-tolerance VOR and TACAN course structure and unusable DME. **NOTAM**, Chicago VORTAC: VOR, DME, and TACAN azimuth unusable, 025° cw 075° beyond 25 nm below 3,500 ft.

(2) Condition 2. A VOR does not provide adequate signal to 40 miles at the required altitudes in various areas. **NOTAM** Altoona VOR: VOR unusable, 080° cw 100° beyond 18 nm below 3,500 ft; 100° cw 200° beyond 30 nm below 3,500 ft; 200° cw 300° beyond 30 nm below 4,500 ft; 300° cw 350° beyond 15 nm; 350° cw 010° beyond 30 nm below 4,000 ft.

(3) Condition 3. VOR is unusable in various areas below one altitude. Also, the DME is unusable in one sector. **NOTAM,** Yardley VORTAC: VOR unusable below 1,700 feet in the following areas: 250 cw 265° beyond 17 nm; 265 cw 280° beyond 10 nm; and 280 cw 290° beyond 17 nm. DME unusable 225 cw 275° in the following areas: Beyond 15 nm below 2,400 ft and beyond 30 nm below 5,000 ft.

(4) Condition 4. A Nondirectional radio beacon is not usable in the Southeast quadrant. **NOTAM** Bradford NDB: unusable 090 cw 180° beyond 15 nm.

(5) Condition 5. Glide slope tolerances are exceeded at a specific point on the glidepath. **NOTAM**, Ashville Regional, NC: Rwy 16 ILS glide slope unusable below 2,310 ft MSL.

(6) Condition 6. An ILS localizer exceeds tolerances at 1/2 mile from the runway threshold. **NOTAM,** Hartsville Muni, SC, Rwy 16 ILS unusable from 1/2 nm inbound.

(7) Condition 7. Cat II ILS ceases to meet CAT II criteria. FDC, FI/(P or T), **NOTAM** William B. Hartsfield, Atlanta Int'l, GA: ILS Rwy 9R, CAT II NA.

NOTE: FI/ P means permanent, and FI/ T means temporary flight information.

(8) Condition 8. CAT III ILS localizer exceeds CAT III tolerances in Zone 4. **FDC, FI/P NOTAM** Charleston AFB/Int'l SC: Rwy 15 ILS, CAT III NA.

(9) Condition 9. CAT II ILS localizer exceeds tolerances in Zone 4. **NOTAM,** New Orleans Int'l, LA: Rwy 28 ILS LOC unusable inside runway threshold.

NOTE: The localizer is unrestricted.

(10) Condition 10. CAT III ILS localizer exceeds tolerances in Zone 5. **NOTAM,** New Orleans Int'l, LA: Rwy 28 ILS LOC unusable for rollout guidance.

(11) Condition 11. Glide slope does not meet change/reversal tolerances below a point on the glidepath. **NOTAM,** Ashville Regional, NC: Rwy 16, ILS glide slope unusable for coupled approaches below 2,000 ft MSL.

(12) Condition 12. Localizer does not meet tolerances in the vertical plane. NOTAM, Wellsville Municipal Arpt., Tarantine Field Arpt., Wellsville, NY: ELZ LOC Rwy 28, LOC unusable beyond OM above 3,500, at threshold above 500.

(13) Condition 13. Beyond 5° left of LOC course, there are no glide slope clearances above path, and a glidepath is not provided. NOTAM, Charlotte/Douglas Int'l, NC: Rwy 36R ILS glide slope unusable beyond 5° left of LOC course.

(14) Condition 14

(a) MLS Azimuth Unusable. Because an unusable approach azimuth renders the elevation unusable, refer to any unusable azimuth segment as "MLS unusable". Describe the limits using **inbound courses;** e.g.:

1 UMP MLS unusable 196 cw 206°.

2 UMP MLS unusable 196 cw 206° below 4°.

3 UMP MLS unusable 196 cw 206° beyond 15 DME below 4,000 ft MSL.

(b) Elevation. Refer to any unusable segment as "MLS elevation unusable"; e.g.,

1 UMP MLS elevation unusable 151 cw 156° below 3.5°.

2 UMP MLS elevation unusable 151 cw 156° beyond 15 DME below 7,000 ft MSL.

(c) MLS DME unusable. Refer to any area of unusable DME as "UMP MLS DME unusable".

(15) Condition 15. PAPI lights are baffled and unusable beyond 5° right of centerline due to obstructions: **NOTAM** Heber City-Russ McDonald Fld, UT, RWY 21 PAPI unusable beyond 5° right of runway centerline.

k. Required Advisories for Local NOTAM(s). The flight inspector must notify Air Traffic (AT) personnel when the facility is not authorized for use because of flight inspection actions.

SECTION 2. RECORDS AND REPORTS

5.20 INTRODUCTION. This section provides policy for flight inspection reports and records. The flight inspection report provides permanent, historical interpretation of a system's performance. The report must accurately reflect the operational status of the system, the quality of the signal in space, the instrument flight procedure, and revised obstacle, topographical, and cultural data.

5.21 RECORDS. Flight inspection files are Federal record material. The standards for their retention and destruction are contained in FAA Order 1350.15, Records Organization, Transfer, and Destruction Standards. A facility Reconfiguration (Special/ RF) inspection that meets all the commissioning requirements is considered a Commissioning type inspection for record keeping purposes. Flight inspection reports and the **source material for reports** on all electronically radiated facilities inspected constitute report files that must be archived. Such material must contain, but is not limited to, recorder charts showing facility data used, system status, and self-test results, receiver outputs, and crew inputs affecting measurements. Other material may include data items which are necessary for flight inspection purposes, such as horizon profiles, site drawings, topographic charts, instrument approach/ departure procedure charts, photographs, electronic media, data sheets, aircraft logbooks, VFR Chart field sheets, and obstacle records. PAR, VGSI, and NDB source material is not required to be retained once the report has been archived.

Data logger files must be archived for all inspections utilizing AFIS conducted with a functioning data logger. Every effort should be made to ensure a functioning data logger is available prior to the inspection. When logger files are not available for archive, either due to none being recorded or data corruption post flight, state such in the Remarks block of the report. A central repository has been established and is used to archive all logger files. Use the following instructions to upload logger files with the data indexing application.

- Sign in to the AVN dashboard (http://avnokcprd.amc.faa.gov/dashboard)
- On the top menu bar scroll over FI and select FOMS. This will launch the FOMS homepage.
- From the menu on the left, under "Applications" select "Data Indexing".
- A new window will open entitled "Flight Inspection Data Indexer"
- Under the drop-down menu for Itineraries, select the desired itinerary name. This drop-down menu contains all itineraries covering a three-week period.
- In order to display a range of itineraries outside the three-week window or to narrow the list, select the "Filter Itineraries" bar. This will open a new window that will accept wild card entries. Any part of the itinerary name can be entered for retrieval. For example: If "BTL" is entered, all itineraries containing "BTL" will appear.

- Once the desired itinerary is selected, click on “Select Log Directory”.
- A new window will open that allows selection of the location of the log files. Most commonly this will be the drive where the electronic storage media is inserted, unless the files were saved to a different location.
- Open the folder where the files are contained.
- Once the correct file location is selected, click on “Start Sending”. This will upload all the files from the itinerary.
- After files are uploaded, they can be retrieved by clicking on “Itinerary” under the “Searches” menu on the FOMS homepage.
- Enter desired search criteria and click on “Query”. This will open the “Itinerary Search Results” page.
- Once the correct itinerary is found, there will be a link on the right side of the page under the “Data” column. That link will open to the location where the files are stored and can be retrieved.

NOTE: If there are multiple versions of Java on the computer being used for the file upload, the data indexing utility will not work properly. If an error is received, use the following instructions:

- On the computer, select the “Start” menu
- Go to “Settings”, then “Control Panel”.
- In the control panel window, select “Java”
- In the Java Control Panel window, select the “Java” tab.
- On the bottom pane under “Java Application Runtime Settings”, select “View”
- In the new window that opens, ensure only version (Product) 1.5.0_6 is checked “Enabled”. Uncheck any other versions that may be enabled.
- The data indexing function should work. If it still does not, restart the computer.

a. General Information. Ensure that any information that is included in the facility file is annotated with the following information:

(1) Facility identification/ type of facility

(2) Date(s) of inspection

(3) Type of inspection (e.g., periodic)

(4) Aircraft tail number

(5) Crew initials and numbers

(6) Recorder calibration

(7) Equipment-required flight inspection self-test

(8) Airborne flight inspection system calibrations (i.e., TVPS, system setup, and receiver calibrations)

b. Facility Data Sheets. The flight inspector must ensure that the facility data reflects the most current information and is sufficient to complete the flight check requirements.

5.22 REPORTS. The flight inspection report serves as the primary means of documentation and dissemination of the results of each flight inspection. Requirements for the use, completion, and distribution of standard FAA and suitable military flight inspection forms are contained in FAA Order 8240.36, Flight Inspection Report Processing System (latest revision).

a. Military Facilities

(1) Changing a Facility Classification to Restricted or Unusable or Altering a Restriction. When the results of the flight inspection indicate that the facility classification is to be changed to "restricted" or "unusable" or that facility restrictions have changed, land the aircraft, if practical, and discuss the reasons and recommended action with appropriate representatives of the base commander. If it is impractical to land, give a status report to the control tower (on ground or tower frequency) indicating the exact status of the facility (unrestricted, restricted, or unusable) and all discrepancies found. Provide them with suggested wording for any required NOTAM(s). Request acknowledgement of the information.

(2) Where there has been no change in facility performance, inform the control tower (on ground or tower frequency) of the exact facility classification. Again, request acknowledgement.

(3) If a military installation does not have a control tower, attempt to pass the information over any other available air-to-ground frequency that would ensure dissemination of the flight check results. If no appropriate air-to-ground frequency is available and it is impractical to land, notify the appropriate personnel as soon as possible.

(4) In any of the above cases, inform the appropriate military maintenance personnel of any discrepancies discovered, and the resulting facility classification.

b. Reports Submitted by Military Flight Inspectors.

(1) Flight inspection reports of facilities inspected by military flight inspection crews, who have been delegated the authority for execution of the flight inspection mission, must be accepted by the FAA as official flight inspection reports.

(2) Military flight inspectors must assign a classification or status to those facilities for which they have flight inspection responsibility.

> **NOTE:** Coordination may be in the form of a letter of agreement or may be handled on a case-by-case basis. Coordination with AVN constitutes full flight inspection authority for the respective facility.

c. VFR Aeronautical Chart field sheet notes and obstacle evaluations are a record of having performed the flight inspection and will be archived at NACO.

his Page Intentionally Left Blank

CHAPTER 6. FLIGHT INSPECTION OF INSTRUMENT FLIGHT PROCEDURES

TABLE OF CONTENTS

Paragraphs	*Title*	*Pages*
6.10	INTRODUCTION	6-1
	a. General	6-1
	b. Characteristics	6-1
	c. General Considerations	6-1
	d. Inspector Authority	6-2
	e. Obstacle Evaluations	6-3
6.11	FLIGHT INSPECTION PROCEDURES	6-6
	a. Preflight Requirements	6-6
	b. Airways, Jet Routes, and other Routes	6-7
	c. Fixes	6-9
	d. Holding Patterns	6-10
	e. SIAP(s)	6-11
	f. Flyability	6-13
	g. SID(s) and DP(s)	6-15
6.12	TABLES and SUPPLEMENTAL INFORMATION	6-17
	a. Designated Mountainous Areas	6-17
	b. MEA Gap Criteria	6-18

This Page Intentionally Left Blank

CHAPTER 6. FLIGHT INSPECTION OF INSTRUMENT FLIGHT PROCEDURES

6.10 INTRODUCTION

a. General. Instrument flight procedures specify standard routings, maneuvering areas, minimum and/or procedural altitudes, and visibility minimums for instrument flight rules (IFR) operations.

b. Characteristics. Instrument flight procedures include airways, jet routes, off-airway routes, standard instrument approach procedures (SIAP(s)), Special Aircrew Authorization Required (SAAR) procedures, standard instrument departures (SID(s)), departure procedures (DP(s)), standard terminal approach routes (STAR(s)), and charted visual flight procedures (CVFP(s)).

c. General Considerations. The objective of evaluating instrument flight procedures is to ensure safety and flyability. The following items are included in this evaluation:

(1) Aircraft maneuvering is consistent with safe operating practices for the category of aircraft intending to use the procedure.

(2) Cockpit workload is acceptable.

(3) Existing procedures evaluated for errors in printing and navigation charts properly portray the procedure and are easily interpreted.

(4) The applicable systems (NAVAID(s), satellite, FMS, etc.) support the procedure. References in this section are for clarification only and do not supersede instructions, criteria, or tolerances for facilities or systems contained elsewhere in this order and in FAA Order 8200.1.

(5) A restricted NAVAID may still support an instrument flight procedure when the procedure does not use the out-of-tolerance area. Those areas must be reflected on the flight inspection report and on the facility data sheet where performance will restrict or limit the expected procedure.

(6) A DME arc segment may be used in areas of unusable VOR radial information, provided that the DME, the radial where the arc starts, the lead radial, the final approach radial, and any other radial used in the procedure meet required tolerances.

(7) The flight inspection of an instrument flight procedure and verification of the SIAP obstacle data may be conducted during the applicable system inspection if VMC conditions prevail throughout each of the procedural segments that are to be evaluated.

(8) On preflight review of an amended procedure, it is not necessary to refly amended segments if the minimum altitudes are raised. Ensure descent gradient and maximum reception altitudes remain in compliance with guidance.

(9) Human Factors. Consideration of human factors in instrument flight procedures seeks to optimize the relationship between people and their activities. In the context of flight inspection, a determination is made as to whether a flight procedure is operationally safe and flyable for a minimally qualified sole pilot flying an aircraft with basic IFR instrumentation in IMC using standard navigation charting.

The criteria used to develop instrument flight procedures represent many factors such as positioning requirements, protected airspace, system and avionics capabilities, etc. Human factors such as cockpit workload, pilot error, and memory limitations have been considered. Sensory, perceptual, and cognitive restrictions historically have been incorporated in the criteria only to a limited extent; e.g. length of approach segments, descent rates, turn angles, etc. These are products of subjective judgments in procedural development and cartographic standards. It is incumbent upon the flight inspector to apply the principals of human factors when certifying an original or amended procedure. The following factors must be evaluated:

(a) Complexity. The procedure should be as simple as possible. It should not impose an excessive workload on a sole pilot flying a minimally equipped aircraft.

(b) Interpretability

1 For SIAP(s), the final course should be clearly identifiable, with the primary guidance system or NAVAID unmistakable.

2 For SIAP(s), the procedure should clearly indicate which runway the approach serves and indicate which runway(s) circling maneuvers apply to.

(c) Human Memory Considerations. Pilots must be able to extract information quickly and accurately during an instrument approach. Multiple tasks complicate the memory process and tend to produce prioritization decisions during stressful phases of flight. Workload reduction can be accomplished through methodical chart layout that encourages the pilot to periodically refer to the depicted procedure rather than trying to memorize complex maneuvers.

d. Inspector Authority. At commissioning, the flight inspector has the discretion to reject the procedure if it does not constitute a satisfactory maneuver from a human factors/ flyability standpoint. Concerns must be resolved with the procedure specialist and/or supervisory personnel prior to commissioning. During subsequent checks of a commissioned procedure, new obstructions, signal problems, or other safety concerns constitute reason for a flight inspector to deny or modify a procedure by NOTAM. Human factors/ flyability concerns during subsequent checks must be resolved with the procedure specialist and/or supervisory personnel before any changes are issued.

e. Obstacle Evaluations. The following procedures apply to the obstacle check only and not to the facility inspection associated with the procedure. Both pilots look outside to identify the controlling obstacle. If any doubt regarding an obstacle arises, investigate as necessary and comply with Order 8200.1 paragraphs for determining the altitude and location of a given obstacle. Use appropriate FAA Order 8260 series procedure development criteria or equivalent guidance for ROC values.

(1) For obstacle checks of new or amended procedures, use the following guidance:

(a) Feeder and Initial Segments of a procedure. Fly the procedural azimuth in either direction, identifying the controlling obstacle and comparing its height with other obstacles in the segment. The altitude used to fly this segment will be no higher than the procedural altitudes, minus 100 ft, but no lower than the procedural altitude minus 50% of the ROC and ROC adjustments (e.g., 50% of 1,000 ft = 500 ft; 50% of 2,000 ft in mountainous area =1,000 ft).

(b) Intermediate Segment of a procedure (ROC of 500 ft). Fly the procedural azimuth in either direction, identifying the controlling obstacle and comparing its height with other obstacles in the segment. The altitude used to fly this segment will be no higher than the procedural altitudes, minus 100 ft, but no lower than the procedural altitude minus 50% of the ROC and ROC adjustments (50% of 500 ft = 250 ft).

(c) Final Without Vertical Guidance - Approach segment (ROC less than 500 ft). Fly the procedural azimuth in either direction at the designed procedural altitudes, minus 100 ft, for non-precision, but no lower than the procedural altitude minus 50% of the ROC and ROC adjustments (final ROC can be determined from FAA Form 8260-9 or procedure development criteria). Use the controlling obstacle as a basis for comparing its height with other obstacles in the segment.

(d) Final with Vertical Guidance – Approach segment (using Obstacle Clearance Slope (OCS)). Fly the approach in either direction at the designed glidepath (but no lower than ½ degree below the published glide path angle). If flown in the reverse direction (DA to FAF), begin at the runway threshold and climb as required outbound at designed altitudes (minus no more than ½ degree below the published glide path angle) until reaching the FAF. Consider the increasing altitude of the OCS as you get closer to the FAF.

(e) Missed Approach segment should be flown in the direction of intended use, beginning at the MAP/ DH/ DA at either the MAP altitude, minus 50% of the ROC, or the DH/ DA altitude and climbing at a rate of 152 ft/ nm until reaching the designed altitude or altitude clear of any potential obstacles. (The altitude at the termination point should be no lower than the procedural altitude minus 50% of the ROC of 1,000 ft).

(2) During obstacle verification inspections (other than commissioning inspections), it is not necessary to visually identify the controlling obstacle, but rather to verify that the required obstacle clearance is provided by the minimum procedural altitude(s) for the final segment. Part of the preflight preparation for the obstacle check of a runway at any given airport will include a determination by the PIC if multiple approaches to the same runway may be combined into one single obstruction check. If combining approaches into a "single obstruction check", the altitude flown must be the lowest altitude of any of the combined approaches. The trapezoids of combined approaches should overlap, but under no circumstance can the approach azimuth of the different approaches differ by more than 10°. If all the approaches to a given runway cannot be combined, a separate obstacle check for approaches outside the criteria must be completed. Annotate the DFL if combining the obstacle check is not feasible.

(a) Final Without Vertical Guidance – Approach segment (ROC less than 500 ft). Fly the procedural azimuth in either direction at the designed procedural altitudes, minus 100 ft, for non-precision, but no lower than the procedural altitude minus 50% of the ROC and ROC adjustments (final ROC must be determined). Visually verify the integrity of the required obstacle clearance surface/ slope while flying inbound or outbound.

(b) Final With Vertical Guidance – Approach segment (using OCS). Fly the approach in either direction at the designed procedural altitudes (but no lower than ½ degree below the published glide path angle). Visually verify the integrity of the required obstacle clearance surface/ slope. If flown in the reverse direction (DA to FAF), begin at the runway threshold and climb as required outbound at designed altitudes (minus no more than ½ degree below the published glide path angle) until reaching the FAF. Visually verify the integrity of the required obstacle clearance surface/ slope in the segment, with consideration of the increasing altitude of the OCS as you get closer to the FAF.

(c) Missed Approach segment should be flown in the direction of intended use, beginning at the MAP/ DH/ DA at either the MAP altitude minus 50% of the ROC or the DH/ DA altitude and climbing at a rate o f 152 ft/ nm until reaching the designed altitude or altitude clear of any potential obstacles, (the altitude at the termination point should be no lower than the procedural altitude minus 50% of the ROC and ROC adjustments of 1,000 ft). During a periodic obstacle verification inspection, fly the missed approach procedure to a point where the flight inspector can identify any obstacle that could be a potential hazard.

(3) For approach with vertical guidance segments with sloping obstacle clearance surfaces, only surveyed data should be used when considering obstructions unless newly identified obstacles clearly penetrate such surfaces.

(4) On commissioning checks, if the controlling obstacle is listed as terrain/ trees or as an adverse assumption obstacle (AAO), it is not necessary to verify which tree or terrain feature is controlling, only that no higher manmade obstacle is present in the protected airspace.

(5) On commissioning checks, if unable to confirm that the declared controlling obstacle is the highest obstacle in the segment, list the location, type, and approximate elevation of any obstacles and pass this information to the procedure specialist for consideration.

(6) If a controlling obstacle has been dismantled or eliminated, pass this information to the procedure specialist for consideration.

(7) The flight inspector retains the responsibility to ensure that the procedure provides the required obstacle clearance and may use his or her discretion to vary the flight pattern to best suit the evaluation.

(8) Conduct obstacle evaluations in VMC only.

(9) Identification of New Obstacles

(a) In most instances, accurate information concerning the location, description, and heights of tall towers and other considerable obstacles is available from the FAA database and/or other governmental sources. When a new obstruction is identified and may become the controlling obstruction for the segment, the procedure will be denied until the procedure specialist can analyze the impact of the obstacle on the overall procedure.

(b) Obstacle locations should be noted in latitude/ longitude as determined from aircraft or flight inspection equipment, or radial/ bearing and distance from a navigation facility. If these methods are not available, an accurate description on an aeronautical chart may be used.

(c) Estimated obstacle height will be ascertained via the safest and most expeditious method available. Obstacle heights measured in flight will not be used unless the actual height of the obstruction cannot be determined by other methods. If in-flight height determination is required, accurate altimeter setting and altitude references must be used to obtain precise results. Where possible, note both the MSL and AGL elevation.

(d) An alternative method for determining obstacle height is to select another obstacle in the near vicinity that has a known or published elevation. Fly abeam the uppermost point on the known obstacle and set the copilot's altimeter to read the same MSL elevation as the known obstacle's height. Without resetting the altimeter, fly abeam the obstacle for which the height is unknown and note the altimeter reading.

(e) Pass all information about newly identified obstacles to the procedure specialist. The obstacle information and the method of height determination will be documented on the flight inspection report.

(10) The Terminal Arrival Areas (TAA) of some Area Navigation (RNAV) SIAP(s) may have controlling obstacles that do not lie within the primary or secondary areas of Initial approach segments. There is no requirement to verify that the identified controlling obstacle is the highest obstacle in the entire TAA segment but, while transiting the segment, observe the area for obstacles that may exceed the height of the controlling obstacle. If any such obstacles are identified, pass this information to the procedure specialist for consideration.

(11) Some Ground Proximity Warning Systems (GPWS(s)) may alert while flying over irregular or rapidly rising terrain at altitudes providing the required obstacle clearance. If GPWS alerts are received while inspecting procedures at the minimum procedural altitude, repeat the maneuver. If the alert is repeatable, notify the procedure specialist.

(12) In all cases where it is determined that the minimum procedural altitude of a published segment does not provide at least the required obstacle clearance, action must be taken by the flight inspector to notify the procedure specialist and to ensure that a procedural NOTAM is issued to amend or deny the use of the procedural segment.

6.11 FLIGHT INSPECTION PROCEDURES. The methods used to evaluate signal quality and RNAV systems are detailed in individual sections of this order. Requirements of this section are primarily concerned with procedural aspects.

a. Preflight Requirements

(1) The office initiating the procedure must forward all data necessary for conducting the flight inspection to the FICO who, in turn, will forward the information to the flight inspector responsible for the inspection. If there are special factors relative to the procedure, the FICO should set up a briefing by the procedure specialist, or designee, for the flight inspector. For additional information, see Order VN 8200.6, Flight Inspection Package.

(2) **Procedural data must include** the following as a minimum:

(a) **Charts of sufficient detail** to safely navigate and identify considerable terrain, obstacles, and obstructions.

(b) **Identification of controlling terrain/ obstructions** for each segment.

(c) **Minimum (and maximum where applicable) altitudes** determined to be usable from map study and data base information for each segment of the procedure.

(d) **Narrative description of the procedure.**

(e) **Plan and profile views for SIAP(s).**

(f) **Data for each fix and holding pattern.**

(g) **Airport markings and any special local operational procedure** (e.g., noise abatement, non-standard traffic patterns, lighting activation, etc.)

(3) Current forms are acceptable from established organizations involved in the development of instrument flight procedures. If the procedures package as delivered to the FICO is inconsistent with this section, the package will be returned intact to the developing organization. If, after the package is found to be inconsistent with this section, the flight inspector must return it intact to the FICO who must return it to the developing organization. The FICO/ flight inspector must identify deficiencies on a comment sheet to accompany the returned procedure package.

(4) **Where required, the flight inspector should coordinate and brief ATC** on special handling requirements and/or procedural operation.

(5) **Prior to flight, the flight inspector must verify** that all supporting equipment or systems are in place and functioning.

b. **Airways, Jet Routes, and other Routes**

(1) **Maneuvering**

(a) As appropriate, evaluate the radials and/or bearings that make up the route (airway, jet route, or en route) segment to midpoint or other specified COP.

(b) **If a Minimum Obstruction Clearance Altitude (MOCA) is specified for the route,** perform the evaluation at the MOCA (TRUE) altitude within 22 nm of the facility; otherwise, perform the evaluation at the MEA (TRUE) altitude for the airway or route.

(c) During the initial inspection of a low altitude airway or route segment, ensure that the MOCA (or Minimum En route Altitude (MEA) if no MOCA is specified) provides the required obstacle clearance.

(2) AFIS/ Equipment Setup. Configure AFIS and/or aircraft equipment for analysis of the facility to be inspected in accordance with the appropriate section of this order.

(3) Analysis

(a) The published MEA is predicated upon the MOCA (if applicable), the Minimum Reception Altitude (MRA), airspace, air traffic, and communications requirements. Flight inspection will determine the MRA, minimum communications altitude, and verify the MOCA. The flight inspector will coordinate MEA changes with the procedure specialist to ensure that flight inspection requirements are met.

(b) If a facility will not support an airway or route to the midpoint or specified COP, an effort will be made by the flight inspector to determine a revised COP at the altitude requested. This may require that the facility providing guidance beyond the midpoint or COP also be evaluated. If a usable COP cannot be established, determine if raising the MEA can provide a usable airway or route and, if so, consider evaluating the facilities at the higher altitude.

(c) In some cases, a Maximum Authorized Altitude (MAA) is specified. MAA(s) are limitations based on airspace restrictions, system performance characteristics, or interference predictions. If the MAA is based on an interference problem, the source of the interference should be identified and corrective action initiated where possible to eliminate the MAA.

(4) Special Considerations

(a) FAA Order 8260.3, U.S. Standard for TERPS, authorizes, under specific conditions, route MEA gaps in facility signal reception. The use of an MEA gap may allow for a usable airway or route at a lower altitude. The development of an MEA gap must be coordinated with the procedure specialist.

(b) Ensure that all ESV(s) are processed and approved.

(c) Satisfactory communications coverage over the entire route segment at the MEA must be available with an ATC facility.

(d) The minimum required obstacle clearance for each route segment can be derived from FAA Form 8260-16, Transmittal of Airways/Route Data. In most cases, en route ROC is 1,000 ft (2,000 ft in designated mountainous terrain).

c. Fixes. Navigation fixes can be established by intersections, DME, and RNAV waypoints. The procedure specialist must provide FAA Form 8260-2, Radio Fix and Holding Data Record), for the requested fix. This form provides information on fix make-up, additional facilities that can be used at the fix, holding pattern information, coordinates, fix use, and other information.

(1) Maneuvering. The required maneuvering is determined by the appropriate section of this order, and whether or not the fix lies within the SSV of the facility to be inspected.

(2) AFIS/ Equipment Setup. Configure AFIS and/or aircraft equipment for analysis of the facility to be inspected in accordance with the appropriate section of this order.

(3) Analysis

(a) An MRA will be determined for each navigation facility used for fix makeup. For GPS derived fixes, the procedure specialist establishes the minimum altitude for the GPS fix.

(b) An MRA will be determined for any other navigational facilities used at the fix (usually for SIAP use, such as feeder segments, or for substitute routes).

(c) The minimum ATC communications altitude will be determined for the fix. Verify satisfactory communications are available with each ATC facility shown on FAA Form 8260-2 at the minimum communications altitude, usually established at the lowest MRA of any navigational facility used at the fix.

(4) Special Considerations

(a) Ensure that required ESV(s) are processed and approved.

(b) Air/ ground communications with ATC must be satisfactory at the minimum altitude for each SIAP initial approach fix, and also at the highest missed approach “climb-to” altitude at the missed approach holding fix. At lower altitude, air/ ground communications may be required where essential for the safe and efficient use of airspace.

(c) Ensure that any amended MRA(s), communications altitudes, or other changes determined as a result of the flight inspection are forwarded to the procedures specialist.

d. Holding Patterns

(1) Maneuvering

(a) Data for the holding pattern is found on FAA Form 8260-2, provided by the procedures specialist.

(b) If facility performance and obstacle data are on file, flight inspection of the holding pattern is not required.

(c) Within the contiguous U.S., an obstacle check for a high altitude holding pattern is not required.

(d) If flight inspection is required, maneuver the aircraft through the requested holding pattern at the minimum holding altitude.

(2) AFIS/ Equipment Setup

(a) Configure AFIS and/or aircraft equipment for analysis of the facility to be inspected in accordance with the appropriate section of this order.

(b) For VOR or TACAN, ensure usable signal strength through the turn to the inbound leg of the holding pattern.

(3) Analysis

(a) For low altitude holding patterns, verify that the minimum holding altitude provides the required obstacle clearance in the same manner as a feeder route.

(b) As appropriate, evaluate the radial or bearing that establishes the holding pattern.

(4) Special Considerations

(a) Holding patterns that allow “climb-in-hold” are evaluated differently in the TERPS process. If it appears that the holding pattern requires a “climb-in-hold” evaluation (usually in missed approach or departure holding), verify that such an evaluation was accomplished from the Remarks section of FAA Form 8260-2 or from the procedures specialist.

(b) The minimum required obstacle clearance required for a holding pattern may be found on FAA Form 8260-2. In most cases, en route holding ROC is 1,000 ft (2, 000 ft in mountainous terrain).

e. SIAP(s)

(1) Maneuvering

(a) New SIAP. Fly all procedural segments at the minimum procedural altitude (true). All initial, intermediate, final, and missed approach segments must be flown in the intended direction of procedural use.

(b) Amended SIAP. Fly all amended segments covering a new ground track at the minimum procedural altitude (true).

(2) AFIS/ Equipment Setup. Configure AFIS and/or aircraft equipment for analysis of the facility to be inspected in accordance with the appropriate section of this order.

(3) Analysis

(a) Feeder, Initial, and Intermediate Segments. Evaluate each new or amended terminal route for required obstacle clearance and flyability.

(b) Final Approach Segment. Evaluate each new or amended final segment for required obstacle clearance and flyability.

1 For non-precision SIAP(s), the final segment must be flown to an altitude 100 feet below the MDA.

2 Precision and APV final approaches must be flown to the DA or DH.

3 The final approach course must deliver the aircraft to the desired aiming point. The aiming point varies with the type of system providing procedural guidance and will be determined by the procedure specialist.

4 For commissioning inspections, misaligned or inaccurate data indications will be forwarded to the procedure specialist for further review prior to the commissioning of the procedure.

5 After flight inspection verifies the aiming point, it will not be changed without the concurrence of the procedures specialist. When the system no longer delivers the aircraft to the established aiming point and the system cannot be adjusted to regain the desired alignment, consideration should be given to amending the procedure.

(c) Circling Area. The flight inspector must verify each new or amended proposed circling maneuvers are safe and sound for each of the aircraft categories proposed. Ensure that required obstacle clearance is provided throughout the circling area.

(d) Visual Segment. Helicopter point-in-space and some other procedures have extensive visual segments between the MAP and the landing area. Evaluate the new or amended segment for operational suitability and safety. Recommend procedural adjustments when buildings or obstructions obscure access to the landing area. Each procedure with a "Fly visual" segment proposed for night use must be evaluated at night prior to commissioning, or must be restricted from night use until the evaluation is completed.

(e) Missed Approach Segment. Flight inspection of the new or amended missed approach segment must assure that the designed procedural altitudes provide required obstacle clearance. During periodic inspections, fly the missed approach procedure at least to a point where the flight inspector can identify any obstacles that could be a hazard.

(4) Special Considerations

(a) Communications. Air/ ground communications with ATC must be satisfactory at the minimum approved altitude for each SIAP IAF and at the highest missed approach "climb-to" altitude.

(b) Night evaluation of an airport with no prior IFR service, procedures to newly constructed runways, and procedures to runways lengthened or shortened. A night flight inspection will be conducted to determine the adequacy of the light systems to support the procedure. Night IFR operations will not be authorized until the night evaluation is completed.

(c) Radio Altimeter. CAT II/ III SIAP(s) require the use of radio altimeter. Irregular terrain features could cause erratic radio altimeter indications. For commissioning, report the radio altimeter indication at CAT II DA. For periodic inspections, record the radio altimeter indications for engineering analysis purposes.

(d) Airport Environment. The airport environment must be evaluated for its suitability to support the SIAP. Unsatisfactory or confusing airport markings, non-standard or confusing lighting aids, or lack of ATC communication at critical flight phases may be grounds for denying the use of the procedure. In all cases where an unsatisfactory airport environment is identified on a published procedure, the procedure specialist must be apprised of the unsatisfactory condition and appropriate NOTAM action initiated.

(e) Periodic Reviews. In addition to the in-flight evaluation of each SIAP during a periodic check, conduct a detailed evaluation of each standard or special instrument approach procedure. Notify the National Flight Procedures Office, appropriate military authorities, or private owner of any discrepancies found for possible NOTAM action and correction, and document significant discrepancies on the applicable flight inspection report. Instrument approach procedure discrepancies may not render a procedure unsafe or unusable; the flight inspector is expected to use good judgment and discretion in the evaluation of a procedure. The review should include at least the following:

1 Validity of altimeter setting source

2 Validity of published notes

3 A review of any published FDC NOTAM(s) on the approach procedure for currency and validity.

4 The minimum required obstacle clearance for each procedural segment can be located on FAA Form 8260-9, Standard Instrument Approach Procedure Data Record, contained in the procedure package.

f. Flyability. For procedures with a note stating **"Applicable to Turbojet Aircraft Only",** an appropriately equipped turbojet flight inspection aircraft must be used for flyability evaluation. For complex procedures, additional flyability evaluations may be required in a proponent's simulator or aircraft. Flyability should be evaluated with the aircraft coupled to the autopilot and may require additional evaluation by hand flying. RNAV procedures developed with other than Track-to-Fix (TF) and Direct-to-Fix (DF) leg path/ terminators must be flight checked by an appropriately equipped FMS aircraft. Correct implementation of RNAV leg path/ terminator is critical for route containment and requires evaluation for meeting the intent of the procedure and flyability.

(1) Standard Instrument Departures (SID(s))/ Departure Procedures (DP(s)):

(a) Climb gradient considerations should be applied throughout the departure procedure. Leg length in relation to altitude change versus altitude crossing restrictions (transitioning from "at" or "at or below" to "at" or "at above altitude") needs to be reviewed carefully. For FAA procedures, FAA Order 8260.46, Departure Procedure (DP) Program, states, "**DP(s) requiring a climb gradient** in excess of 500 ft/ nm, either for obstacle clearance or air traffic control restrictions, need approval from Flight Standards Service." In some circumstances, climb gradients up to 500 ft/ nm **may be excessive**. This is directly dependent upon the aircraft types which will use the procedure.

NOTE: USAF/ USN procedures do not require waiver action or approval of any departure climb gradient.

(b) Speed restrictions can also severely limit the usability of a procedure. Any speed restriction has to be compatible with the performance capability of the aircraft expected to comply with the departure. An airspeed restriction below 200 kts should be **extremely limited** in application as to airport, runway, and aircraft.

(c) "Track-to-Fix" (great circle) routes are the predominant leg path/ terminator used in RNAV procedure development. However, significant course/ track changes are being applied independently and in combination with climb gradients and/ or speed restrictions. Public procedures should be designed such that completion of turn limitations, minimum turn radii, and imposed bank angles allow for normal aircraft operating procedures in the accomplishment of the departure.

(2) Standard Terminal Arrival Route (STAR):

(a) The STAR procedure should be designed to standardize descents from the high altitude en route stratum to the terminal environment with a descent gradient of 318 ft per nautical mile (FPNM) or 3°. Below 10,000 ft MSL, the maximum descent gradient should not exceed 330 FPNM.

> **NOTE:** Procedure design may require descent gradients that exceed 330 FPNM. Although not desirable, the procedure may be flyable if appropriate deceleration leg lengths are included to mitigate the effects of high descent gradients.

(b) In addition to using the recommended descent gradients identified in Paragraph (a), the procedure must also allow for deceleration at any waypoint that has a speed restriction and deceleration to transition below 10,000 ft MSL. As a general guideline, deceleration considerations should add 1 nm for each 10 kts of speed reduction required.

The flight inspection evaluation for flyability should be based on 300 – 310 KIAS at 10,000 ft and above and 250 KIAS below 10,000 ft. Where deceleration is necessary, use a 10 kt per nautical mile rate of deceleration to arrive at the required speed.

Vertical path should be easily tracked without use of aircraft drag devices. Use of drag devices should only be required with tailwind conditions in excess of 50 kts. Procedures requiring use of drag devices should have the vertical path redesigned.

A STAR connecting to an initial approach should provide for deceleration to arrive at the initial fix at 200 kts.

(3) Approach. Deceleration considerations should be applied through the initial and intermediate approach segments. The procedure should provide for deceleration to arrive at the FAF at 150 kts.

(a) For a straight-in approach, an initial/ intermediate segment descent gradient not exceeding 250 ft/ nm allows the aircraft to decelerate without having level segments. This provides a continuous, stable descent, and the aircraft can be configured without using extraordinary pilot actions. A straight-in initial/ intermediate segment designed with the maximum gradient of 318 ft/ nm requires the incorporation of a deceleration segment of 1 nm per 10 kts of deceleration to 150 kts at any FAF or an approach without a designated FAF.

(b) For any approach procedure incorporating a turn to the intermediate segment exceeding 35° of turn, the maximum descent gradient of the intermediate segment should not exceed 160 ft/ nm.

(4) Calculating Deceleration Segment Length (Vertical Flyability)

Example: (may be applied to STAR or Initial/ Intermediate approach segments)

An RNAV STAR begins at waypoint ALPHA at 17,000 MSL and 310 kts and requires the aircraft to descend to and cross waypoint BRAVO at 9,000 MSL and 240 kts. The minimum leg length between ALPHA and BRAVO is computed as follows:

(17,000 – 9,000)/ 318 = Minimum leg length using a 3° descent gradient,
8,000/ 318 = 25.157 nm

Plus
(310 kts – 240 kts)/ 10 = Deceleration segment
70/ 10 = 7 nm
25.157 + 7 = 32.157 nm (round to 32.2 nm)

g. SID(s) and DP(s). For RNAV SID(s) and DP(s), see Chapter 13 also.

(1) Maneuvering

(a) For the initial part of the departure procedure, fly over the departure end of each specified runway at approximately 35 ft and establish an initial a climb at either 200 ft per nautical mile or the minimum rate established for the SID or DP, whichever is higher. Continue the climb to 400 ft, or higher if specified, above the departure end of the runway before initiating any turns, and fly the route until it crosses a common fix or route structure on the SID or DP.

(b) Considering obstacles and flyability, fly the most adverse runway routing from over the runway through to an established NAVAID or fix, or to a point where en route obstacle clearance has been established. Climb at either 200 ft per nautical mile or the minimum rate established for the SID or DP.

(c) Fly all transitions at the MOCA or MEA altitudes as specified by the procedural forms. If necessary, consider raising segment MEA(s) or changing COP(s) to establish usable transitions.

(2) AFIS/ Equipment Setup

(a) Configure AFIS and/or aircraft equipment for analysis of the facility to be inspected in accordance with the appropriate section of this order.

(b) When required, program the aircraft FMS or GPS unit with the route waypoints and/or fixes. Care must be taken when programming, as different type waypoints are occasionally used.

(3) Analysis

(a) Evaluate required obstruction clearance using the minimum climb gradient through the departure routing.

(b) Evaluate the initial turns and headings to join courses.

(c) Evaluate the flyability of crossing restrictions, climb gradients, and turns, basing the evaluation on the type of aircraft expected to fly the procedure.

(d) Verify course, distance, radial, and altitude information presented on procedural forms.

(4) Special Considerations

(a) Heading and turn radius established by TERPS may result in headings that will not intercept procedurally specified courses. Determine flyable headings to intercept courses and forward to the procedure specialist for consideration.

(b) Verify that required ESV(s) are approved and processed.

(c) Consider that the procedure may have very low MEA(s) predicated only on obstacles and not account for airspace or aircraft capability. This is particularly the case with RNAV SID(s), as NAVAID performance is usually not a requirement.

(d) To the maximum extent possible, emulate the speeds and performance expectations of aircraft expected to use the procedure.

(e) In some cases, it may be necessary to have the procedure performed in an aircraft certified for the procedure with the flight inspector aboard and in a position where an evaluation can be accomplished.

6.12 TABLES AND SUPPLEMENTAL INFORMATION

a. Designated Mountainous Areas

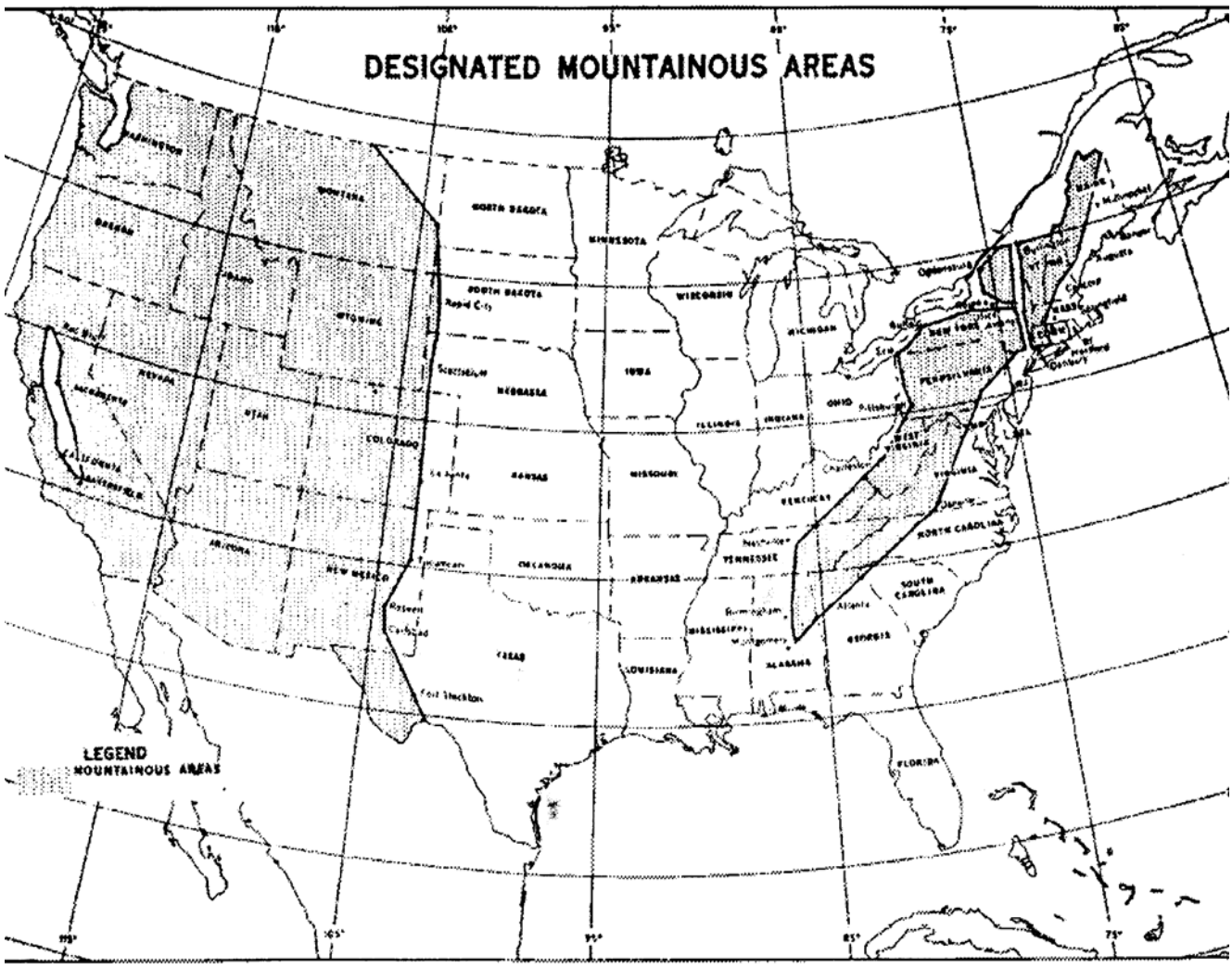

b. MEA Gap Criteria

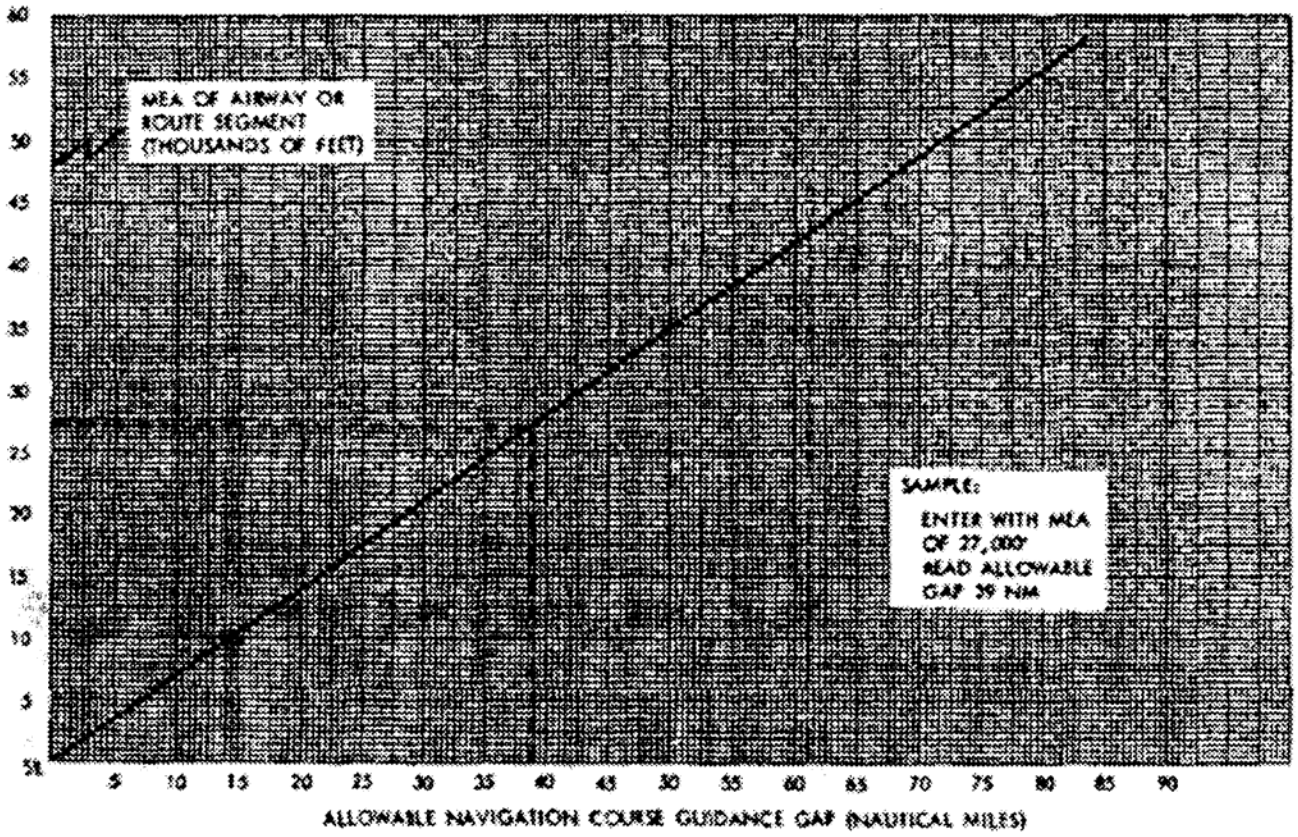

CHAPTER 7. LIGHTING SYSTEMS

TABLE OF CONTENTS

Paragraphs *Title* *Pages*

SECTION 1. VISUAL GLIDE SLOPE INDICATOR (VGSI)

7.10 INTRODUCTION 7-1
a. General 7-1
b. Characteristics 7-1
c. Classification 7-3

7.11 DETAILED DESCRIPTION OF VGSI(s) 7-3
a. Visual Approach Slope Indicator System (VASI) 7-3
(1) VASI-2 7-3
(2) SAVASI-2 7-3
(3) VASI-4 7-4
(4) VASI-12 7-4
(5) VASI-8 7-4
(6) Walker 3-Bar BASI-6 7-5
(7) Walker 3-Bar VASI-16 7-5

b. Precision Approach Path Indicator System (PAPI) 7-6
(1) Four-Box System 7-7
(2) Two-Box System 7-10

c. Pulsating Visual Approach Slope Indicator (PVASI) System ... 7-10
d. T-VASI 7-11
e. Tri-Color VASI 7-12
f. Helicopter Approach Path Indicator (HAPI) 7-13

7.12 FLIGHT INSPECTION PROCEDURES 7-13
a. Light Intensity 7-13
b. Glide Path Angle 7-14
(1) Level Run Method 7-14
(2) On-Path Method for VGSI (non-PAPI) 7-15
(3) Multiple Transition Method 7-18

TABLE OF CONTENTS

Paragraphs *Title* *Pages*

c. Angular Coverage 7-20
d. Obstruction Clearance 7-21
e. System Identification/ Contrast 7-22
f. Radio Control of Lighting 7-23
g. Coincidence (ILS/ MLS/ PAR) 7-23

SECTION 2. APPROACH AND RUNWAY LIGHTS

7.20 INTRODUCTION 7-24
a. Commissioning 7-24
b. Periodic 7-24
c. Night Evaluation with No Prior IFR Service 7-25
d. Night Evaluation of New or Changed Approach Lighting Systems 7-25
e. Lighting Systems Restrictions 7-25
f. Maintenance Personnel 7-25

7.21 LIGHTING SYSTEMS 7-25
a. General 7-25
b. Approach Lighting System 7-25
(1) Sequenced Flashing Lights (SFL) 7-25
(2) Runway Alignment Indicator Lights 7-26
(3) Approach Lighting System (ALS) 7-26
(4) Simplified Short Approach Lighting System (SSALS). 7-28
(5) Medium Intensity Approach Lighting System (MALS). 7-28
(6) Omni-directional Approach Lighting System (ODALS) 7-30
(7) Runway End Identifier Lights (REIL) 7-30
c. Runway Lighting Systems 7-31
(1) Runway Edge Lighting 7-31
(2) Centerline Lighting (CL) 7-32
(3) Touchdown Zone Lighting (TDZL) 7-32
d. Other Airport Lighting 7-32
e. Pilot Control of Airport Lighting 7-32

7.22 FLIGHT INSPECTION PROCEDURES 7-33
a. Approach Lighting Systems 7-33
b. Runway Lighting Systems 7-34

7.23 TABLES AND SUPPLEMENTAL INFORMATION 7-35

FIGURES

Figure 7-1 VGSI Lateral Coverage Area 7-1
Figure 7-2 VASI 7-2
Figure 7-3 PAPI 7-2
Figure 7-4 VASI-2 7-3
Figure 7-5 VASI-4 7-4
Figure 7-6 VASI-12 7-4
Figure 7-7 Walker 3-Bar VASI-6 7-5
Figure 7-8 Walker 3-Bar VASI-16 7-5
Figure 7-9 PAPI Approach Path 7-6
Figure 7-10 4-Box PAPI 7-10
Figure 7-11 2-Box PAPI 7-10
Figure 7-12 Pulsating Visual Approach Slope Indicator (PVASI) 7-11
Figure 7-13 T-VASI 7-11
Figure 7-14 Tri-Color VASI 7-12
Figure 7-15 Helicopter Approach Path Indicator (HAPI) 7-13
Figure 7-16 Level Run Profile 7-15
Figure 7-17 On-Path Profile (Non-PAPI) 7-17
Figure 7-18 PAPI Multiple Transition Profile 7-19
Figure 7-19 Coverage Flight Profile 7-20
Figure 7-20 VGSI Obstruction Clearance Area 7-22
Figure 7-21 ALSF-2 7-27
Figure 7-22 ALSF-1 7-27
Figure 7-23 SSALR/ MALSR and SSALS/ MALS/ MALSF 7-29
Figure 7-24 Omnidirectional Approach Lighting System (ODALS) 7-30
Figure 7-25 Runway End Identifier Lights (REIL) 7-31

TABLES

Table 7-1 Height Groups 1 – 3 Aircraft 7-7
Table 7-2 Height Group 4 Aircraft 7-7
Table 7-3 Conversion Table 7-8
Table 7-4 Runways with Approach Lights 7-33
Table 7-5 Runways without Approach Lights 7-33

This Page Intentionally Left Blank

CHAPTER 7. LIGHTING SYSTEMS

SECTION 1. VISUAL GLIDE SLOPE INDICATOR (VGSI)

7.10 INTRODUCTION

a. General. The Visual Glide Slope Indicators, (VGSI), are ground devices that use lights to define a vertical approach path during the final approach to a runway. The visual signal consists of at least two and not more than four colors. Allowable colors are red, amber, green, or white. Only red is used to indicate the lowest below-path sector of the system.

Many factors such as snow, dust, precipitation, color of background, terrain, etc., affect the color interpretation of the VGSI. Some deterioration of system guidance may occur as the pilot approaches the runway threshold, due to the spread of light sources and narrowing of individual colors.

Valid runway and VGSI data must be available to validate VGSI angles. Systems without valid data cannot be commissioned.

b. Characteristics:

(1) VGSI(s) are aligned to provide a glide path of at least 1.0° above obstacles. Unrestricted VGSI(s) provide coverage to 10° either side of the runway centerline extended measured from the runway threshold to a distance specified for the system when using the AFIS PAR/ VGSI mode. This lateral coverage is measured from the upwind bar or light, extending from the threshold out to a point a normal glide path can commence. Lateral guidance is obtained by reference to either visual cues or electronic aids.

Figure 7-1
VGSI Lateral Coverage Area

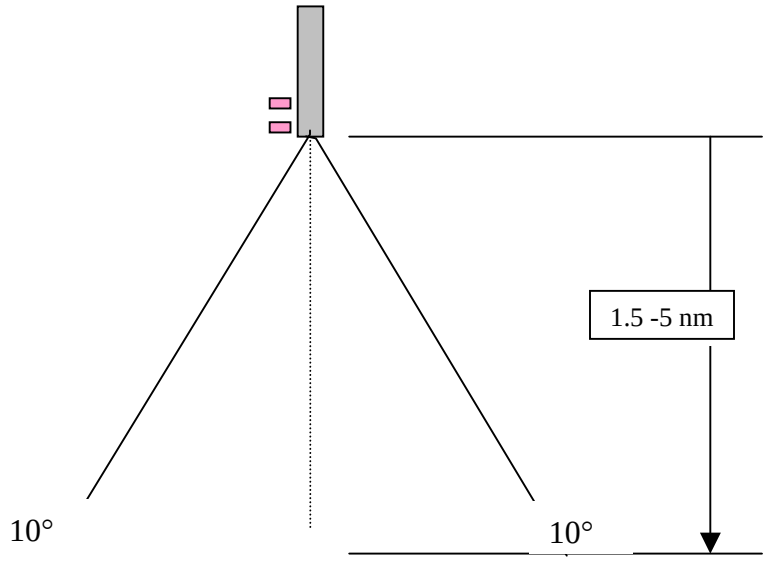

(2) VGSI(s) provide vertical guidance for a VFR approach or for the visual portion of an instrument approach. The angle established by the VGSI is referred to as the Visual Glide Path Angle.

The visual glide path angle is normally 3.0°. Siting criteria or operational needs may require installations with other than the standard angle, i.e. high cockpit aircraft (FAA Order 6850.2, Height Group 4). Setting the required visual angle is the responsibility of ground installation personnel. This angle is normally published in the Airport/ Facility Directory.

The signal formats used to establish the visual glide path angles are:

- Single light source
- Two or Three light sources in a longitudinal array
- Three, four, or more light sources in a longitudinal, and/or lateral array.

(3) Depending on the type of VGSI(s) and system design, the light intensity can be either manually or automatically controlled for daylight or nighttime operations. Some systems have three settings allowing for day, twilight, and nighttime operations. On certain types of systems, maintenance can select other options for nighttime operations to accommodate local site conditions. The normal intensity setting for daylight is 100 percent, for twilight periods 30 percent, and for hours of darkness, 10 percent.

(4) Visual Approach Slope Indicator System (VASI) or Precision Approach Path Indicator System (PAPI) light boxes are numbered starting at (1), with the box nearest the runway on each side and working outboard. For international use, this numbering process is reversed.

Figure 7-2

VASI

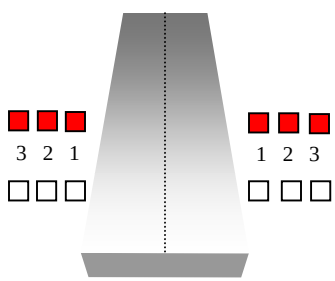

Figure 7 -3

PAPI

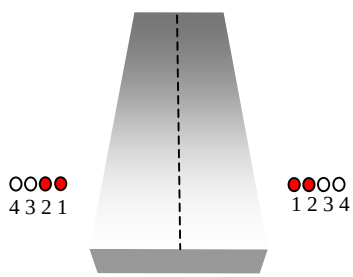

(5) Threshold Crossing Height (TCH) is the height of the lowest on-path signal at the threshold. The minimum TCH is determined by the most critical aircraft that normally operates at that runway. The TCH of VGSI(s) will normally be 25 to 75 ft. Specific TCH criteria for each type system is located in FAA Order 6850.2, Visual Guidance Lighting Systems.

c. Classification. There are several classifications of VGSI(s) in use today. The primary systems are:

- Visual Approach Slope indicators (VASI)
- Precision Approach Path Indicators (PAPI)
- Pulsating Visual Approach Slope Indicators (PVASI)
- T-VASI
- Tri-color VASI
- Helicopter Approach Path Indicator (HAPI)

Each of these types presents a different visual indication to the pilot and requires different in-flight interpretation.

7.11 DETAILED DESCRIPTION OF VGSI(s)

a. Visual Approach Slope Indicator System (VASI) consists of either two or three light bars placed perpendicular to the runway. The light bars consist of one, two, or three boxes aligned on the left or both sides of the runway. Each box contains three high intensity lamps behind a horizontally divided filter with red colored and clear portions. The basic configurations of VASI are described below:

(1) VASI-2 consists of two light boxes. This system provides descent information under daytime conditions to a distance of 3 miles.

Figure 7-4
VASI - 2

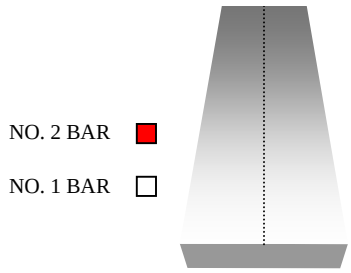

(2) Simplified Abbreviated Visual Approach Slope Indicator System (SAVASI-2) consists of two light boxes with a single lamp in each box. This system is designed for non-jet, utility runways, and provides descent information under daytime conditions to a distance of 1.5 miles.

(3) **VASI-4** consists of two light bars and four light boxes. This system provides descent information under daytime conditions to a distance of 4 miles.

Figure 7-5

VASI - 4

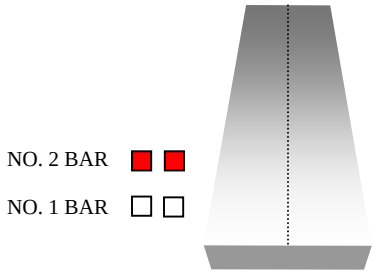

(4) **VASI-12** consists of two light bars and 12 light boxes. This system provides descent information under daytime conditions to a distance of 5 miles.

Figure 7-6

VASI - 12

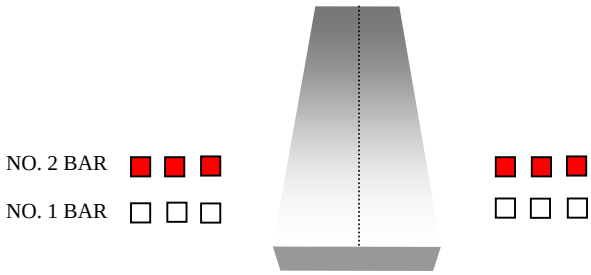

(5) **VASI-8**, which consists of eight lights, is basically the 12-box system with the outer four boxes removed and provides descent information under daytime conditions to a distance of 5 miles. It is located on both sides of runway.

(6) Walker 3-Bar VASI-6 is a 3-bar system. Each bar consists of two light boxes aligned on the left side of the runway. The system provides two visual glide paths, the lower glide path normally set at 3.0° and the higher glide path is normally set 1/4° higher, to accommodate high cockpit aircraft out to a distance of 3 miles.

Figure 7-7

WALKER 3-BAR
VASI - 6

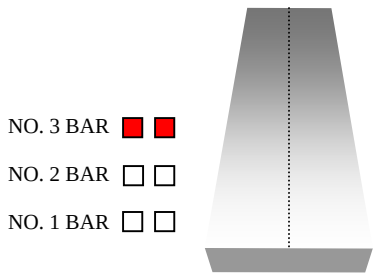

(7) Walker 3-Bar VASI-16 consists of 16 light boxes installed is basically a VASI-12 with the addition of an upwind 2-box light bar on each side of the runway. This provides an additional visual glide path above and almost parallel to the normal path. The upper path is designed for high cockpit aircraft, ensuring a safe, minimum wheel clearance over the runway threshold. This system provides descent information under daytime conditions to a distance of 5 miles. Light bars are located on both sides of runway.

Figure 7-8
WALKER 3-BAR
VASI - 16

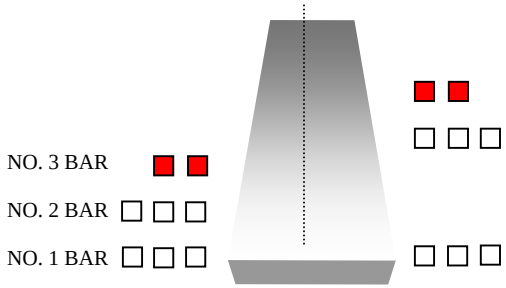

b. Precision Approach Path Indicator System (PAPI) uses a two-color light projector system that produces a visual glide path. Each light box consists of at least two optical projectors that produce a single beam of light. The upper part of the beam is WHITE and the lower part RED. When passing through the beams, the transition from one color to the other is almost instantaneous.

Figure 7-9

PAPI APPROACH PATH

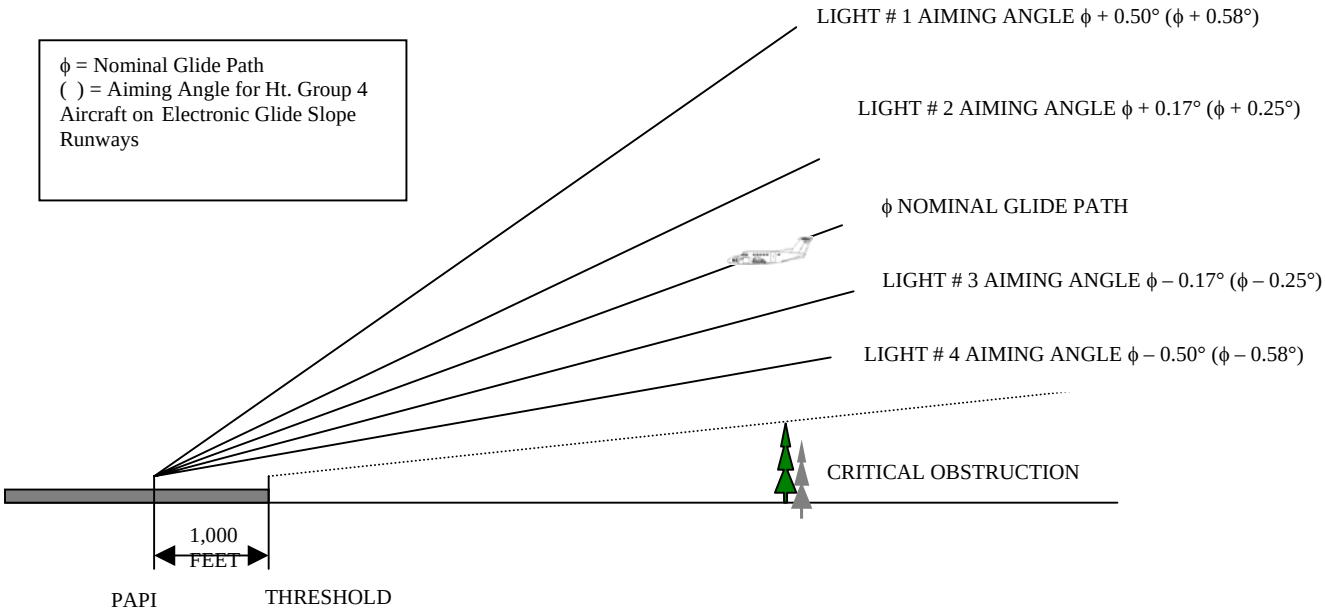

There are two basic configurations of PAPI(s) that are described below:

(1) Four-Box System. The glide path angle of a 4-box system is the midpoint of the angular setting of the center pair of light boxes. The on-path width is the difference between the angles of light boxes 2 and 3. Normal installation requires 0.33° between light box settings 1 and 2, 2 and 3, and 3 and 4. Systems that support large aircraft require 0.50° between light boxes 2 and 3.

Table 7-1

HEIGHT GROUPS 1 - 3 AIRCRAFT

BOX	2.50	2.60	2.70	2.80	2.90	3.00	3.10	3.20	3.30	3.40	3.50	3.60	3.70	3.80	3.90	4.00
1	3.00	3.10	3.20	3.30	3.40	3.50	3.60	3.70	3.80	3.90	4.00	4.10	4.20	4.30	4.40	4.50
2	2.67	2.77	2.87	2.97	3.07	3.17	3.27	3.37	3.47	3.57	3.67	3.77	3.87	3.97	4.07	4.17
3	2.33	2.43	2.53	2.63	2.73	2.83	2.93	3.03	3.13	3.23	3.33	3.43	3.53	3.63	3.73	3.83
4	2.00	2.10	2.20	2.30	2.40	2.50	2.60	2.70	2.80	2.90	3.00	3.10	3.20	3.30	3.40	3.50

Table 7-2

HEIGHT GROUP 4 AIRCRAFT

BOX	2.50	2.60	2.70	2.80	2.90	3.00	3.10	3.20	3.30	3.40	3.50	3.60	3.70	3.80	3.90	4.00
1	3.08	3.18	3.28	3.38	3.48	3.58	3.68	3.78	3.88	3.98	4.08	4.18	4.28	4.38	4.48	4.58
2	2.75	2.85	2.95	3.05	3.15	3.25	3.35	3.45	3.55	3.65	3.75	3.85	3.95	4.05	4.15	4.25
3	2.25	2.35	2.45	2.55	2.65	2.75	2.85	2.95	3.05	3.15	3.25	3.35	3.45	3.55	3.65	3.75
4	1.92	2.02	2.12	2.22	2.32	2.42	2.52	2.62	2.72	2.82	2.92	3.02	3.12	3.22	3.32	3.42

NOTE: Maintenance establishes the alignment of the individual boxes using a degrees, minutes, seconds format instead of the above angle format. This has caused confusion between maintenance and flight inspection crews. The following charts contain the angles and the conversion to degrees, minutes, seconds. Use these charts to aid in setting the angle alignment.

Table 7-3

Conversion table degrees, tenths, hundredths to Degrees, Minutes, Seconds

D.DD°	D° MIN' SEC"	D° MIN.MIN'	D.DD°	D° MIN' SEC"	D° MIN.MIN'
2.00	2° 00' 00"	2° 0.0'	2.50	2° 30' 00"	2° 30.0'
2.01	2° 00' 36"	2° 0.6'	2.51	2° 30' 36"	2° 30.6'
2.02	2° 01' 12"	2° 1.2'	2.52	2° 31' 12"	2° 31.2'
2.03	2° 01' 48"	2° 1.8'	2.53	2° 31' 48"	2° 31.8'
2.04	2° 02' 24"	2° 2.4'	2.54	2° 32' 24"	2° 32.4'
2.05	2° 03' 00"	2° 3.0'	2.55	2° 33' 30"	2° 33.0'
2.06	2° 03' 36"	2° 3.6'	2.56	2° 33' 36"	2° 33.6'
2.07	2° 04' 12"	2° 4.2'	2.57	2° 34' 12"	2° 34.2'
2.08	2° 04' 48"	2° 4.8'	2.58	2° 34' 48"	2° 32.8'
2.09	2° 05' 24"	2° 5.4'	2.59	2° 35' 24"	2° 35.4'
2.10	2° 06' 00"	2° 6.0'	2.60	2° 36' 00"	2° 36.0'
2.11	2° 06' 36"	2° 6.6'	2.61	2° 36' 36"	2° 36.6'
2.12	2° 07' 12"	2° 7.2'	2.62	2° 37' 12"	2° 37.2'
2.13	2° 07' 48"	2° 7.8'	2.63	2° 37' 48"	2° 37.8'
2.14	2° 08' 24"	2° 8.4'	2.64	2° 38' 24"	2° 38.4'
2.15	2° 09' 00"	2° 9.0'	2.65	2° 39' 00"	2° 39.0'
2.16	2° 09' 36"	2° 9.6'	2.66	2° 39' 36"	2° 39.6'
2.17	2° 10' 12"	2° 10.2'	2.67	2° 40' 12"	2° 40.2'
2.18	2° 10' 48"	2° 10.8'	2.68	2° 40' 48"	2° 40.8'
2.19	2° 11' 24"	2° 11.4'	2.69	2° 41' 24"	2° 41.4'
2.20	2° 12' 00"	2° 12.0'	2.70	2° 42' 00"	2° 42.0'
2.21	2° 12' 36"	2° 12.6'	2.71	2° 42' 36"	2° 42.6'
2.22	2° 13' 12"	2° 13.2'	2.72	2° 43' 12"	2° 43.2'
2.23	2° 13' 48"	2° 13.8'	2.73	2° 43' 48"	2° 43.8'
2.24	2° 14' 24"	2° 14.4'	2.74	2° 44' 24"	2° 44.4'
2.25	2° 15' 00"	2° 15.0'	2.75	2° 45' 00'	2° 45.0'
2.26	2° 15' 36"	2° 15.6'	2.76	2° 45' 36"	2° 45.6'
2.27	2° 16' 12"	2° 16.2'	2.77	2° 46' 12"	2° 46.2'
2.28	2° 16' 48"	2° 16.8'	2.78	2° 46' 48"	2° 46.8'
2.29	2° 17' 24"	2° 17.4'	2.79	2° 47' 24"	2° 47.4'
2.30	2° 18' 00"	2° 18.0'	2.80	2° 48' 00"	2° 48.0'
2.31	2° 18' 36"	2° 18.6'	2.81	2° 49' 36"	2° 48.6'
2.32	2° 19' 12"	2° 19.2'	2.82	2° 49' 12"	2° 49.2'
2.33	2° 19' 48"	2° 19.8'	2.83	2° 49' 48"	2° 49.8'
2.34	2° 20' 24"	2° 20.4'	2.84	2° 50 24"	2° 50.4'
2.35	2° 21' 00"	2° 21.0'	2.85	2° 51' 00"	2° 51.0'
2.36	2° 21' 36"	2° 21.6'	2.86	2° 51' 36"	2° 51.6'
2.37	2° 22' 12"	2° 22.2'	2.87	2° 52' 12"	2° 52.2'
2.38	2° 22' 48"	2° 22.8'	2.88	2° 52' 48"	2° 52.8'
2.39	2° 23' 24"	2° 23.4'	2.89	2° 53' 24"	2° 53.4'
2.40	2° 24' 00"	2° 24.0'	2.90	2° 54' 00"	2° 54.0'
2.41	2° 24' 36"	2° 24.6'	2.91	2° 54' 36"	2° 54.6'
2.42	2° 25' 12"	2° 25.2'	2.92	2° 55' 12"	2° 55.2'
2.43	2° 25' 48"	2° 25.8'	2.93	2° 55' 48"	2° 55.8'
2.44	2° 26' 24"	2° 26.4'	2.94	2° 56' 24"	2° 56.4'
2.45	2° 27' 00"	2° 27.0'	2.95	2° 57' 00"	2° 57.0'
2.46	2° 27' 36"	2° 27.6'	2.96	2° 57' 36"	2°57.6'
2.47	2° 28' 12"	2° 28.2'	2.97	2° 58' 12"	2° 58.2'
2.48	2° 28' 48"	2° 28.8'	2.98	2° 58' 48"	2° 58.8'

2.49	2° 29' 24"	2° 29.4'
2.50	2° 30' 00"	2° 30.0'

2.99	2° 59' 24"	2° 59.4'
3.00	3° 00' 00"	3° 0.0

D.DD°	D° MIN' SEC"	D° MIN.MIN'
3.00	3° 00' 00"	3° 0.0'
3.01	3° 00' 36"	3° 0.6'
3.02	3° 01' 12"	3° 1.2'
3.03	3° 01' 48"	3° 1.8'
3.04	3° 02' 24"	3° 2.4'
3.05	3° 03' 00"	3° 3.0'
3.06	3° 03' 36"	3° 3.6'
3.07	3° 04' 12"	3° 4.2'
3.08	3° 04' 48"	3° 4.8'
3.09	3° 05' 24"	3° 5.4'
3.10	3° 06' 00"	3° 6.0'
3.11	3° 06' 36"	3° 6.6'
3.12	3° 07' 12"	3° 7.2'
3.13	3° 07' 48"	3° 7.8'
3.14	3° 08' 24"	3° 8.4'
3.15	3° 09' 00"	3° 9.0'
3.16	3° 09' 36"	3° 9.6'
3.17	3° 10' 12"	3° 10.2'
3.18	3° 10' 48"	3° 10.8'
3.19	3° 11' 24"	3° 11.4'
3.20	3° 12' 00"	3° 12.0'
3.21	3° 12' 36"	3° 12.6'
3.22	3° 13' 12"	3° 13.2'
3.23	3° 13' 48"	3° 13.8'
3.24	3° 14' 24"	3° 14.4'
3.25	3° 15' 00"	3° 15.0'
3.26	3° 15' 36"	3° 15.6'
3.27	3° 16' 12"	3° 16.2'
3.28	3° 16' 48"	3° 16.8'
3.29	3° 17' 24"	3° 17.4'
3.30	3° 18' 00"	3° 18.0'
3.31	3° 18' 36"	3° 18.6'
3.32	3° 19' 12"	3° 19.2'
3.33	3° 19' 48"	3° 19.8'
3.34	3° 20' 24"	3° 20.4'
3.35	3° 21' 00"	3° 21.0'
3.36	3° 21' 36"	3° 21.6'
3.37	3° 22' 12"	3° 22.2'
3.38	3° 22' 48"	3° 22.8'
3.39	3° 23' 24"	3° 23.4'
3.40	3° 24' 00"	3° 24.0'
3.41	3° 24' 36"	3° 24.6'
3.42	3° 25' 12"	3° 25.2'
3.43	3° 25' 48"	3° 25.8'
3.44	3° 26' 24"	3° 26.4'
3.45	3° 27' 00"	3° 27.0'
3.46	3° 27' 36"	3° 27.6'
3.47	3° 28' 12"	3° 28.2'
3.48	3° 28' 48"	3° 28.8'
3.49	3° 29' 24"	3° 29.4'
3.50	3° 30' 00"	3° 30.0'

D.DD°	D° MIN' SEC"	D° MIN.MIN'
3.50	3° 30' 00"	3° 30.0'
3.51	3° 30' 36"	3° 30.6'
3.52	3° 31' 12"	3° 31.2'
3.53	3° 31' 48"	3° 31.8'
3.54	3° 32' 24"	3° 32.4'
3.55	3° 33' 30"	3° 33.0'
3.56	3° 33' 36"	3° 33.6'
3.57	3° 34' 12"	3° 34.2'
3.58	3° 34' 48"	3° 32.8'
3.59	3° 35' 24"	3° 35.4'
3.60	3° 36' 00"	3° 36.0'
3.61	3° 36' 36"	3° 36.6'
3.62	3° 37' 12"	3° 37.2'
3.63	3° 37' 48"	3° 37.8'
3.64	3° 38' 24"	3° 38.4'
3.65	3° 39' 00"	3° 39.0'
3.66	3° 39' 36"	3° 39.6'
3.67	3° 40' 12"	3° 40.2'
3.68	3° 40' 48"	3° 40.8'
3.69	3° 41' 24"	3° 41.4'
3.70	3° 42' 00"	3° 42.0'
3.71	3° 42' 36"	3° 42.6'
3.72	3° 43' 12"	3° 43.2'
3.73	3° 43' 48"	3° 43.8'
3.74	3° 44' 24"	3° 44.4'
3.75	3° 45' 00'	3° 45.0'
3.76	3° 45' 36"	3° 45.6'
3.77	3° 46' 12"	3° 46.2'
3.78	3° 46' 48"	3° 46.8'
3.79	3° 47' 24"	3° 47.4'
3.80	3° 48' 00"	3° 48.0'
3.81	3° 49' 36"	3° 48.6'
3.82	3° 49' 12"	3° 49.2'
3.83	3° 49' 48"	3° 49.8'
3.84	3° 50 24"	3° 50.4'
3.85	3° 51' 00"	3° 51.0'
3.86	3° 51' 36"	3° 51.6'
3.87	3° 52' 12"	3° 52.2'
3.88	3° 52' 48"	3° 52.8'
3.89	3° 53' 24"	3° 53.4'
3.90	3° 54' 00"	3° 54.0'
3.91	3° 54' 36"	3° 54.6'
3.92	3° 55' 12"	3° 55.2'
3.93	3° 55' 48"	3° 55.8'
3.94	3° 56' 24"	3° 56.4'
3.95	3° 57' 00"	3° 57.0'
3.96	3° 57' 36"	3° 57.6'
3.97	3° 58' 12"	3° 58.2'
3.98	3° 58' 48"	3° 58.8'
3.99	3° 59' 24"	3° 59.4'
4.00	4° 00' 00"	4° 0.0

The on-glide path indication is two RED and two WHITE lights on the light bar. When the aircraft goes below the glide path, the pilot sees a progressively increasing number of RED lights, and if the aircraft goes above the glide slope, the number of WHITE lights increases. This system provides descent information under daytime conditions to a distance of 4 miles.

Figure 7-10

4 – BOX PAPI

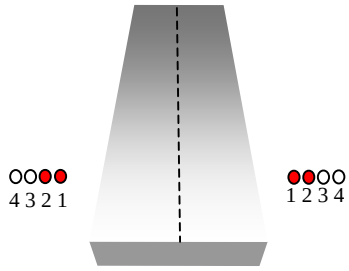

(2) Two-Box System. This system is designed for utility type runways. The glide path angle is the midpoint between the angular settings of the two light boxes. The on-path width of this system is normally 0.50°, but may be reduced to provide obstacle clearance. The on-glide path indication is one RED and one WHITE light. When the aircraft goes below the glide path, the pilot sees two RED lights and two WHITE lights above glide path. This system provides descent information under daytime conditions to a distance of 2 miles. The system is normally installed on the left side of the runway, but may be on the right or on both sides.

Figure 7-11

2 – BOX PAPI

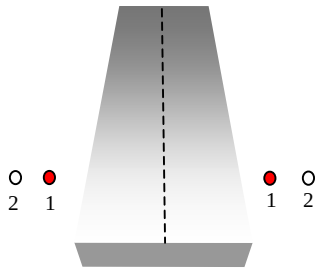

c. Pulsating Visual Approach Slope Indicator System (PVASI(s)) normally consist of a single light unit, projecting a two-color visual approach path. The below glide path indication may be pulsating or steady RED, and the above glide path indication is normally pulsating WHITE. The above and below path pulsating lights appear to pulse faster the farther off path the pilot flies. The on-glide-path indication for one system is a steady WHITE light, and for another system, the on-glide-path indication is an alternating RED and WHITE light. The on-path width of the steady WHITE light is approximately 0.35°. This system provides descent information under daytime conditions to a distance of 4 miles.

NOTE: Since the PVASI consists of a single light source, which could possibly be confused with other light sources, pilots should exercise care to properly locate and identify the light signal.

Figure 7-12
PULSATING VISUAL APPROACH SLOPE INDICATOR

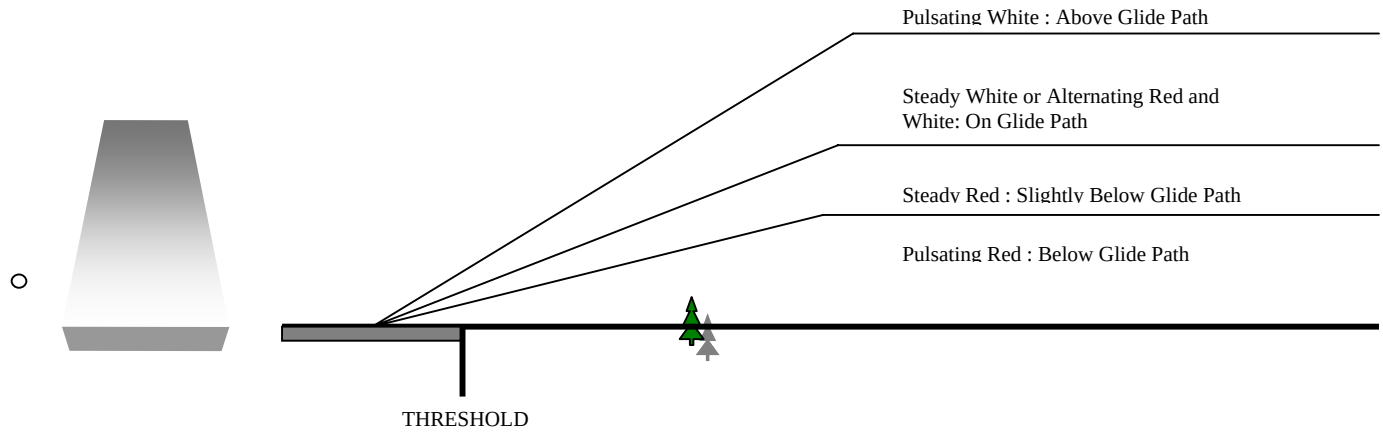

d. **The T-VASI** presents a T-shaped light configuration. The standard version has 10 lights on each side of the runway; the abbreviated AT-VASI is installed on only one side. If the aircraft is above the path, the vertical 'stem' of the T appears inverted above the horizontal path. The length of the stem is relative to the amount the aircraft is above the angle. As the aircraft nears the glide angle, the stem length decreases until it is not visible at the glide angle. As the aircraft goes below the glide angle, the stem of the T appears below the horizontal lights. When the aircraft reaches 1.9°, the lights turn RED, indicating well below glide path. When above the path, the fly-up lights should not be visible, and when below the path, the fly-down lights should not be visible.

Figure 7-13

T - VASI

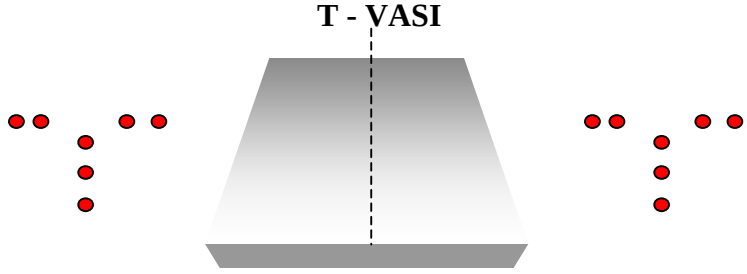

BELOW GLIDE PATH INDICATION

e. Tri-Color VASI (TRCV) normally consists of a single light unit projecting a three-color visual approach path into the final approach area of the runway upon which the indicator is installed.

- Above glide path indication – AMBER
- On glide path indication – GREEN
- Below glide path indication – RED

These types of indicators have a useful range of approximately ½ to 1 mile during the day and up to 5 miles at night, depending upon the visibility conditions.

Note (1): Since the tri-color VASI consists of a single light source, which could possibly be confused with other light sources, pilots should exercise care to properly locate and identify the light signal.

Note (2): When the aircraft descends from GREEN to RED, the pilot may see a dark AMBER color during that transition.

Figure 7-14

TRI – COLOR VASI

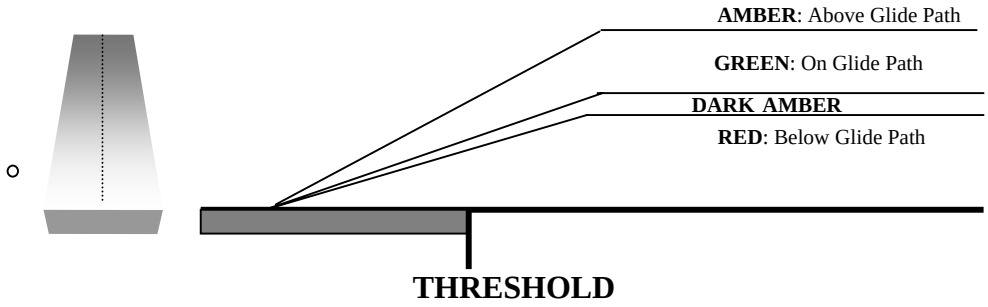

f. The Helicopter Approach Path Indicator (HAPI) system provides angular indications by changing light color between red and green and by pulsing the light. The on-path indication is a steady green light and, as the angle increases, the light flashes at a rate of at least 2 flashes/second (2 Hz). The slightly below path indication is a steady red indication, which turns to a flashing red indication at well below path.

The width of the on-path should be 0.75°, and the width of the slightly below indication should be 0.25°.

Figure 7-15

HAPI

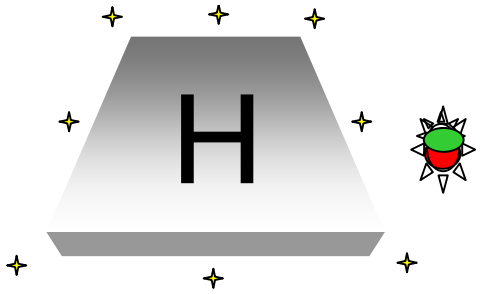

7.12 FLIGHT INSPECTION PROCEDURES

a. Light Intensity

(1) Description. This procedure is used to ensure all lights operate at the same relative intensity at each setting.

(2) Maneuvering. For facilities that are manually controlled, fly inbound while the controller changes the intensity settings to all operating ranges. Systems that use automatic intensity settings should be checked in the same manner as the manual systems if a method for changing the intensity is available.

(3) Analysis: Intensity should be observed throughout the flight inspection. Ensure all lamps (boxes or bars) are operating and are at the same relatively perceived intensity for each setting.

(4) Other Considerations. Bright sunlight may reduce the effectiveness of the VGSI(s). The normal intensity setting for daytime operation is 100%, 30% for twilight operations, and 10%for hours of darkness.

Slow transitions (see Appendix 1 for definition) from red to white, or vice versa, may be an indication of poor focusing. Past results of systems with this problem were low angles.

b. Glide Path Angle

(1) Level Run Method:

(a) Description. The level run method may be used to determine the path angle of all VGSI types. Average the results of at least two runs for commissioning type inspections. Keeping a constant altitude and airspeed, the flight inspector marks the appropriate indications for the VGSI type.

(b) AFIS/ Equipment Setup. Mission Specialist select PAR/ PAPI function and setup per TI 4040.55.

(c) Maneuvering:

1 Position the aircraft inbound on the runway centerline in the below path sector at the procedural intercept altitude or 1,000 ft AGL, whichever is higher.

2 Proceed inbound at a distance applicable for the type of system (1.5 - 5.0 nm) while maintaining constant airspeed and altitude, in the landing configuration.

3 Using the Mission Specialist's ON-PATH key or co-pilot's LORAN WPT (if equipped) button, "Event" the AFIS as each box changes from RED to WHITE.

4 Descend and execute normal runway updating, (50 foot run), using co-pilot's runway update button or Television Positioning System (TVPS).

(d) Analysis. Check for normal sequence of light box color changes. Check for proper angle adjustment.

(e) Other Considerations. If an ILS, MLS, or PAR serve the same runway, the visual approach glide path should coincide with the one produced electronically. Non-coincidence of angles are allowed, provided it is published as such.

Figure 7-16

Level Run Profile

Aircraft Configuration

A/C	Speed KIAS	Flaps	Gear
CL601/ 4	150-180	20	DN
Lear 60	160-200	20	DN
BE300	140-160	Approach	DN
HS125	Vref+25	15	DN

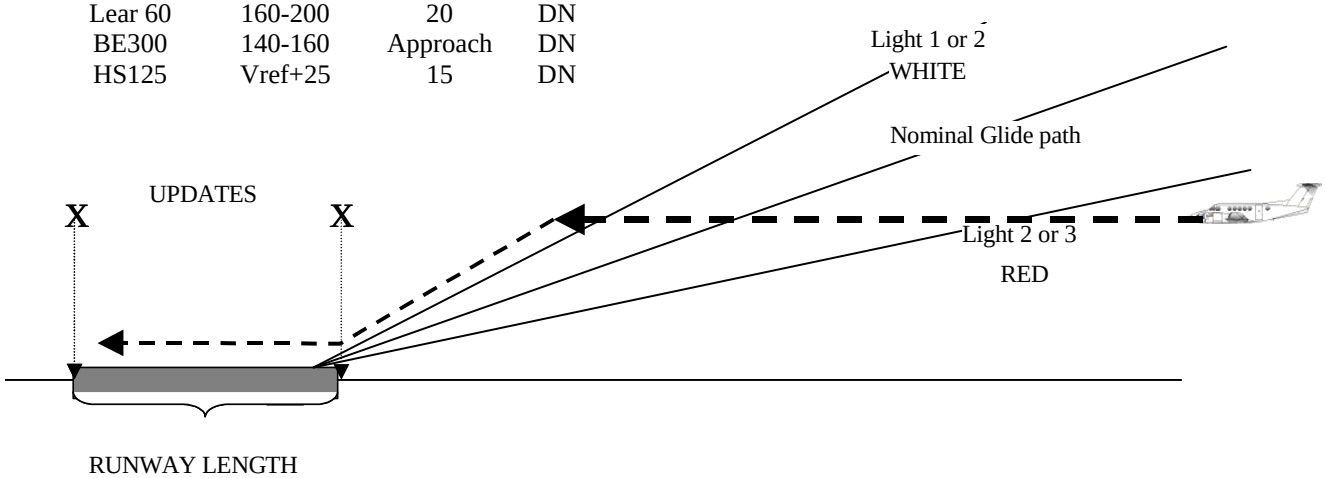

(2) On-Path Method for VGSI (non-PAPI):

(a) Description. The on-path method, using AFIS or theodolite, may be used to determine the path angle of all VGSI types other than PAPI. If theodolite is used, the operator tracks the pilot's window and notes the angles when the pilot reports the desired indication.

(b) AFIS/ Equipment Setup. Mission Specialist select PAR/ PAPI function and setup per TI 4040.55.

(c) Maneuvering:

1 Position the aircraft inbound at a starting distance of 5.0 nm on the runway centerline in the below path sector in the intended direction of use while in the landing configuration.

2 Start at the procedural intercept altitude or 1,000 ft AGL, whichever is higher.

3 Upon reaching the glide path indications, begin a descent and keep the aircraft in the center of the on-glide path indication while maintaining constant airspeed.

4 Using the Mission Specialist's ON-PATH key or co-pilot's LORAN WPT (if equipped) button, "Event" the AFIS at each point the pilot judges the indication to be "ON-PATH".

5 Descend and execute normal runway updating, (50 foot run), using co-pilot's runway update button or Television Positioning System (TVPS).

(d) Analysis. Check for normal sequence of light box color changes. Check for proper angle adjustment. The path angle is the average of the corrected ON-PATH angles.

(e) Other Considerations. If an ILS, MLS, or PAR serve the same runway, the visual approach glide path may coincide with the one produced electronically. Non-coincidence of angles are allowed, provided it is published as such. This method is acceptable for all inspections, including commissioning.

(f) Theodolite Method

1 **Maneuvering:**

a Position the theodolite beside the runway so the imaginary glide path, originating from a point abeam the runway reference point (RRP), will pass through the theodolite eyepiece.

> **NOTE:** The RRP is the point on the runway where the visual glide path intercepts the surface.

b Position the aircraft inbound on the runway centerline in the below path sector in the landing configuration.

c Start at the procedural intercept altitude or 1,000 ft AGL, whichever is higher.

d The operator tracks the aircraft during the level run. The pilot calls when passing the desired indications, and the theodolite operator notes the angles. The center of the on-path indications is used as the glide path angle. For PAPI, the glide angle is the average of the angles measured when the two boxes (Boxes 2 and 3 on 4-box systems) change from RED to WHITE.

> **NOTE:** The center of the on-path indications is used as the glide path angle. For PAPI, the glide angle is the average of the angles measured when the two boxes (Boxes 2 and 3 on 4-box systems) change from RED to WHITE. Average the results of at least two runs for commissioning-type inspections.

Figure 7-17

ON PATH Profile (Non-PAPI)

Aircraft Configuration

A/C	Speed KIAS	Flaps	Gear
CL601/ 4	140 - 180	20	DN
Lear 60	160-200	20	DN
BE300	140 - 160	Approach	DN
HS125	Vref+25	15	DN

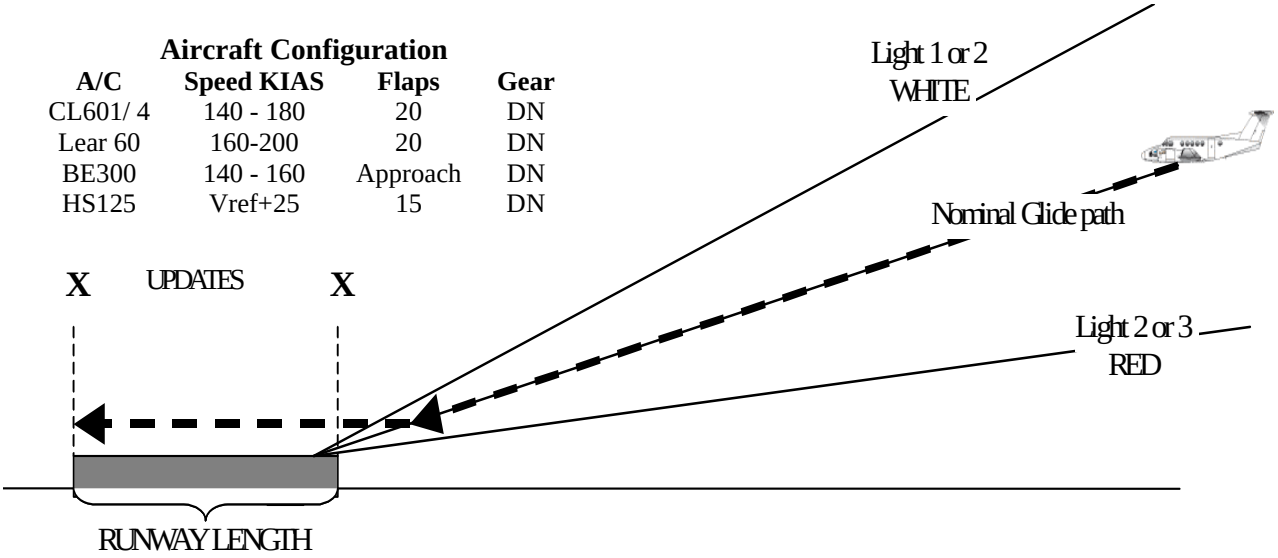

(3) Multiple Transition Method

(a) Description. The **"Multiple Transition"** method uses slight changes in pitch attitude to measure the angles at which a box changes from a low to high and a high to low indication. This method is acceptable for all PAPI inspections, including commissioning. When measuring individual boxes, an average of equal numbers of white/ red and red/ white transitions is required. Confirm out-of-tolerance conditions with individual measurements of all boxes.

(b) AFIS/ Equipment Setup. Mission Specialist select PAR/ PAPI function and setup per TI 4040.55.

(c) Maneuvering:

1 Starting from below-path inbound on-course at a distance of 5.0 nm from threshold, fly through the RED-WHITE change, then slightly increase the rate of descent to see a WHITE to RED transition of the box being checked.

2 Repeat the process to ensure that there are an equal number of transitions in each direction; otherwise, the calculation will be weighted to one side.

3 At each transition point use the Mission Specialist's ON-PATH key or co-pilot's LORAN WPT (if equipped) button to "Event" the AFIS.

4 Descend and execute normal runway updating, (50 foot run), using the co-pilot's runway update button or Television Positioning System (TVPS).

(d) Analysis. Check for normal sequence of light box color changes. Check for proper angle adjustment. System angle is the average of box 2 and box 3 angles (PAPI-4) or of box 1 and box 2 angles (PAPI-2).

Figure 7-18
PAPI Multiple Transition Profile

Aircraft Configuration

A/C	Speed KIAS	Flaps	Gear
CL601/ 4	15 – 180	20	DN
Lear 60	160 – 200	20	DN
BE300	140 – 160	Approach	DN
HS125	Vref+25	15	DN

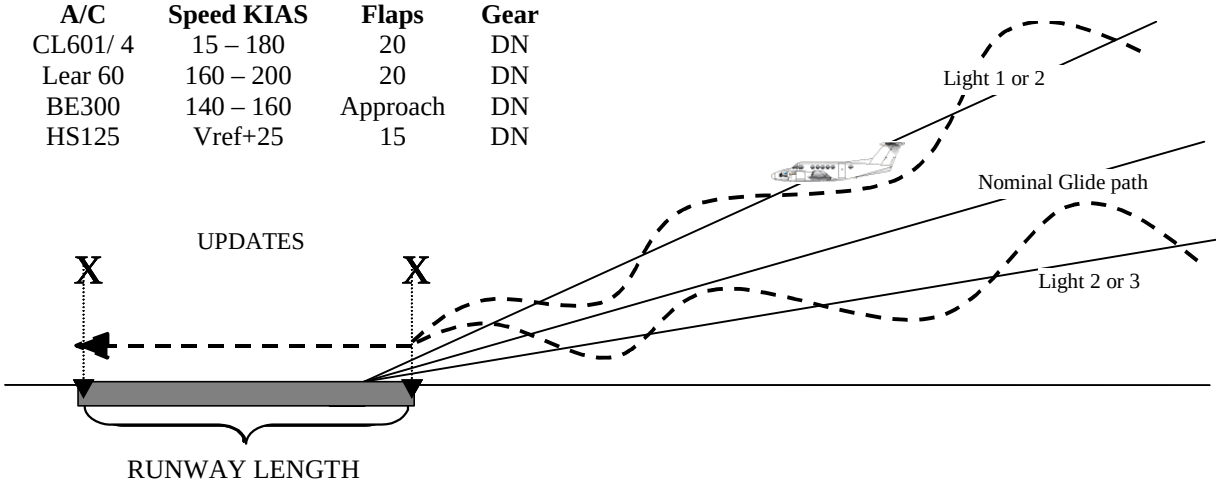

CAUTION
Pilot-induced oscillations could be dangerous. Use extreme caution while conducting this maneuver—never put the crew and aircraft in danger.

c. Angular Coverage

(1) Description. Unrestricted VGSI(s) provide coverage/ obstacle clearance 10° either side of the runway centerline extended, measured from the runway threshold when using the AFIS PAR/VGSI mode. The lateral coverage may be reduced for obstacles by the use of blanking devices or baffles; in this case, the facility is restricted.

(2) AFIS/ Equipment Setup. Mission Specialist select PAR/ PAPI function and setup per TI 4040.55.

Figure 7-19
Coverage Flight Profile

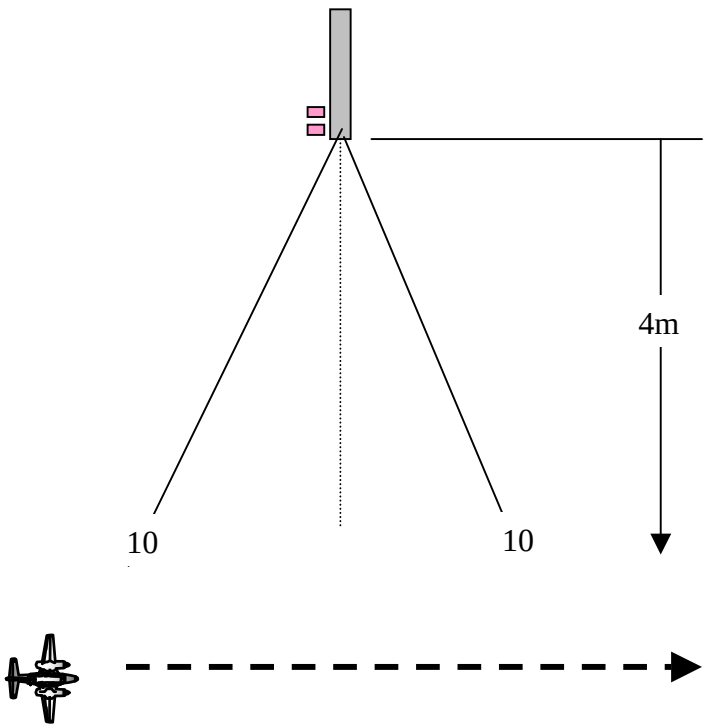

Aircraft Configuration

A/C	Speed KIAS	Flaps	Gear
CL601/ 4	170- 250	UP	UP
Lear 60	160 – 200	20	UP
BE300	140 – 160	UP	UP
HS125	Vref+25-220	15	UP

(3) Maneuvering:

(a) During commissioning inspections, fly a perpendicular crossing to determine the horizontal angular coverage of the VGSI(s).

(b) Lateral coverage is measured by flying either a clockwise or counterclockwise arc at approximately 4 nm (or service volume) at the "ON-PATH" altitude. (Approximately 1300 feet above site elevation, for a 3° angle at 4 nm).

(c) With the AFIS set up, the Pilot announces when the VGSI(s) are first and last usable.

(d) The Technician will read and record the lateral angle left and right of centerline.

(4) Analysis. Observe the point where the VGSI becomes usable or unusable. The usable area is the angular coverage. When coverage or obstacle clearance is less than 10° either side of the runway centerline, restrict the facility, issue a NOTAM, and ensure publication in the Airport/ Facility Directory.

(5) Other Considerations. If an offset ILS/ MLS is installed on the same runway as a VGSI (the VGSI will be aligned to the runway), the angular relationships must be carefully analyzed to determine the coverage suitability. For a system installed on only one side to be considered usable, all lights must be visible. For dual side installations, coverage from either side is required.

d. Obstruction Clearance

(1) Description. The VGSI(s) must provide clearance above all obstacles within the commissioned operational service volume. Flight Inspection verifies that specific VGSI below path indications clear all obstacles within the commissioned service volume. The below-path approach is conducted during commissioning inspections, and anytime there is a questionable obstruction, to determine satisfactory guidance and obstruction clearances. A theodolite may be required to verify a critical obstacle. Obstruction clearance at the lateral coverage extremities may be evaluated during the coverage arc. Confirm questionable clearance by inbound flight.

(2) AFIS/ Equipment Setup: Mission Specialist select PAR/ PAPI function and setup per TI 4040.55.

(3) Maneuvering:

(a) Position the aircraft outside of the normal glide slope intercept distance below the glide path.

(b) While proceeding inbound, a definite below path indication must be visible on the VGSI(s) while maintaining clearance above all obstacles in the approach path.

(c) Conduct below path approaches on runway centerline extended and along each side of the angular coverage from the point where the VGSI's angle intercepts 1,000 ft AGL or procedural altitude, whichever is higher.

Figure 7-20
VGSI Obstruction Clearance Area

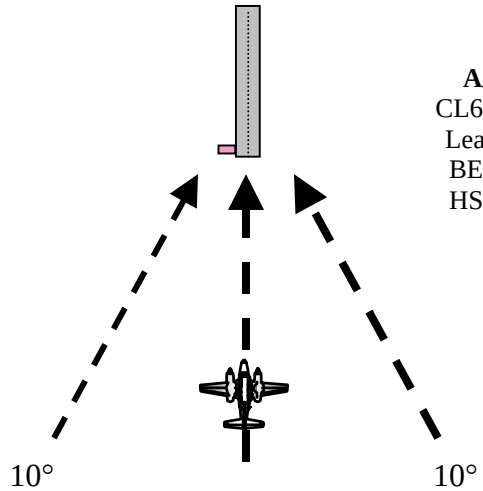

Aircraft Configuration

A/C	Speed KIAS	Flaps	Gear
CL601/ 4	150 – 180	20	DN
Lear 60	160 – 200	20	DN
BE300	140 – 160	Approach	DN
HS125	Vref+25	15	DN

(4) Analysis. Verify that specific VGSI below path indications clear all obstacles within the commissioned operational service volume. A definite climb indication must be evidenced by the system while maintaining clearance above all obstacles. The visual glide path should be at least 1° above all obstacles in the service volume of the VGSI.

(5) Other Considerations. Definite climb indications are:

(a) VASI. A definite RED/ RED light must be visible on both upwind and downwind bars while maintaining clearance above all obstacles.

(b) PAPI. A definite RED must be visible on all light boxes while maintaining clearance above all obstacles.

(c) PVASI/ HAPI. A definite flashing RED must be visible on the light unit while maintaining clearance above all obstacles.

(d) T-**VASI.** A definite RED must be observed on all 4 horizontal and all 3 vertical lights while maintaining clearance above all obstacles.

e. System Identification/ Contrast

(1) Description. VGSI(s) must provide a glide path that is easily identifiable and readily distinguishable from other visual aids and aeronautical lights within the runway threshold and touchdown zone area.

(2) Maneuvering. This evaluation is conducted in conjunction with the other inspections.

(3) Analysis. Observe if any surrounding lights or aircraft on taxiways interfere with the identification or use of the installed system. If there is any question of misidentification or interference, this inspection parameter should be checked at night. If a specific problem can be identified during the day, there is no requirement to confirm it at night.

(4) Other Considerations: Misidentifying or failure to readily acquire the VGSI system will require an unusable status designation.

f. Radio Control of Lighting

(1) Description. Radio control of lighting is available at selected airports to provide airborne control of lights by keying the aircraft's microphone. All lighting systems that are radio controlled at an airport, whether on a single runway or multiple runways, operate on the same radio frequency.

(2) Maneuvering. The aircraft should be positioned 4 to 5 miles from the airport at minimum line-of-sight altitude.

(3) Analysis. The sensitivity of the VGSI's ground radio control should be adjusted to allow facility activation when a proper radio signal is transmitted. Check for standardization of radio controlled lighting operations, as depicted in the Airmen's Information Manual.

(4) Other Considerations. If Pilot-Controlled Lighting is inoperative, initiate NOTAM action and attempt to contact airport authority to have the lights manually activated for night or IFR use**.** Some lighting systems have a photocell that prevents operation during daylight hours. Flight inspectors will verify this with airport authorities before initiating NOTAM action. This information will be added to airport data sheets.

g. Coincidence

(1) (ILS/ MLS/ PAR)

(a) Description. When VGSI(s) and ILS, MLS, or PAR serve the same runway, the visual approach glide path should coincide with the one produced electronically. VGSI installations are engineered to provide close Runway Reference Point (RRP) coincidence with the Runway point of Intercept (RPI), using the same commissioned angle for both systems. Siting conditions affecting the electronic aid's achieved RPI may result in achieved RPI/ RRP coincidence values beyond installation specifications, but satisfactory for use. Non-coincidence of angles and/or intercept points may be allowed, providing they are published as such. Approved waivers to electronic glide slopes must apply to VGSI systems. Some PAPI and PVASI are installed to serve aircraft in Height Group 4. The RRP of these systems is engineered to be 300 – 350 ft down the runway from the electronic RPI. PAPI or PVASI sited height group 4 must be identified in Airport/ Facility Directories or similar publications.

(b) AFIS/ Equipment Setup: Mission Specialist select PAR/PAPI function and setup per TI 4040.55.

(c) Maneuvering:

1 Fly the **electronic glide slope** from approximately 2 nm to threshold for systems installed to support aircraft in Height Groups 1, 2, and 3. For PAPI/ PVASI installed for Height Group 4, independently fly both the electronic and visual glide slopes.

2 While flying the **visual glide slope,** monitor or record the ILS/ MLS glide slope for expected ILS/ MLS displacement at the 6,000 ft and 1,000 ft points.

(d) Analysis. Compare the electronic and visual glide slopes in the area between 6,000 ft and 1,000 ft prior to threshold for coincidence of runway point-of-intercept.

(e) Other Considerations. For PAPI/ PVASI sited for Height Group 4 aircraft, compare the achieved runway intersection points of both systems.

(2) Barometric Vertical Navigation (VNAV). When VGSI(s) and SIAP(s) with Baro VNAV glidepath information serve the same runway, the visual approach path should coincide with the SIAP glidepath(s). Non-coincidence of angles and/or intercept points is acceptable, providing they are published as such.

SECTION 2. APPROACH AND RUNWAY LIGHTS

7.20 INTRODUCTION

a. Commissioning flight inspection is required for all runway and approach lighting systems that support a public-use or military instrument approach procedure. These systems may include approach lights, runway end identifier lights (REIL), runway edge lights, runway centerline and threshold lighting, and pilot control features of these systems.

b. Periodic or recurring inspections will be conducted concurrently with the periodic inspection of the primary navigational facility that the lighting supports. The periodic inspection of the primary facility will be considered complete if circumstances prohibit inspection of the lighting systems, provided all other checklist items contained in FAA Order 8200.1 have been accomplished satisfactorily.

c. Night evaluation of an airport with no prior IFR service. A night flight inspection will be conducted to determine the adequacy of the light systems to support the procedure. Night IFR operations will not be authorized until the night evaluation is completed. (See Chapter 6).

d. Night evaluation of new or changed approach lighting systems Commissioning inspections of approach lighting systems must include a night evaluation. Any addition or deletion of approach lighting components that result in SIAP visibility minimum changes must also be evaluated at night.

e. Lighting systems restrictions. It is not intended that runway and approach lighting systems be classified as unrestricted, restricted, or unusable unless a hazard to safety exists.

f. Maintenance personnel should make every effort to correct discrepancies discovered on an approach lighting system during commissioning flight inspection of the primary navigation aid or procedure. Where a hazard to safety exists, correction of discrepancies will be made prior to public use of the system; otherwise, correction of minor deficiencies will be made as soon as possible.

7.21 LIGHTING SYSTEMS

a. General

(1) An approach lighting system is a configuration of lights positioned symmetrically about the runway centerline extended, starting at the runway threshold and extending outward into the approach zone. This system provides visual information on runway alignment, height perception, roll guidance, and horizontal reference.

(2) Approach lighting systems are designed to improve operational capability and safety of aircraft during approach and landing operations, particularly during the hours of darkness and/or reduced visibility. Although these facilities are considered visual navigational facilities, they are used with electronic landing aids, and generally will support reduced visibility minimums.

b. Approach Lighting System. Standard U.S. lighting systems consist of the following:

(1) Sequenced Flashing Lights (SFL)

(a) If installed, sequenced flashing lights may be installed on each centerline bar of an approach lighting system beginning 1,000 ft from the threshold and extending outward the length of the lighting system. Sequenced Flashing Lights on USAF systems will commence 200 ft from the runway threshold. Sequenced Flight Lights sequence toward the threshold at a rate of twice per second. They appear as a ball of light traveling in the direction of the landing threshold at a very high rate of speed.

(b) Sequenced Flashing Lights are standard with ALSF systems.

(c) Sequenced Flashing Lights may augment a SSALS or MALS to become a SSALF or MALSF, respectively.

(2) Runway Alignment Indicator Lights (RAIL)

(a) The standard RAIL system consists of five sequenced flashing lights installed 200 ft apart on the runway centerline extended, beginning 200 ft beyond the outer end of the approach lighting system.

(b) Runway Alignment Indicator Lights may augment a SSALS or MALS to become a SSALR or MALSR, respectively.

(3) Approach Lighting System (ALS). Installed with sequenced flashing lights (SFL) and designated as either ALSF-1 or ALSF-2, depending upon the configuration. ALSF-1 is the standard Category I system; ALSF-2 is the standard Category II and Category III system.

(a) A**LSF-1.** The ALSF-1 (See Figure 7-21) is the standard Category I approach lighting system with sequenced flasher lights. The ALSF-1 can also support Category II approaches. It consists of a light bar containing five lamps at each 100-ft interval starting 300 ft from the runway threshold and continuing out to 3,000 ft (total of 28 centerline bars). Light bars are installed perpendicular to the runway centerline extended and all lights are aimed away from the runway threshold. The centerline light bar at 1,000 ft from the threshold is supplemented with eight additional lights on either side, forming a light bar 100 ft long and containing 21 lights. This bar is called the 1,000-ft bar. All of the aforementioned lights are white in color. The terminating bar, installed 200 ft from the threshold, is 50 ft long and contains 11 red lights. Wing bars or pre-threshold bars, each containing 5 red lights, are located 100 ft from the threshold, one on either side of the runway. The innermost light (nearest runway centerline) of each wing is located in-line with the runway edge lights. The threshold bar is a row of green lights spaced 5 to 10 ft apart that are located near the threshold and extended across the runway threshold to approximately 45 ft from the runway edge on either side of the runway. The ALSF-1 operates on five intensity settings of 100%, 20%, 4%, 0.8%, and 0.16%. This system may be authorized for approval of Category II minima by appropriate authority.

(b) ALSF-2. The ALSF-2 (See Figure 7-22) is the standard Category II approach lighting system and differs from the ALSF-1 system only in the inner 1,000 ft (nearest the runway threshold) with the outer 2,000 ft being identical for both. The terminating bar and wing bars of the ALSF-1 configuration are replaced with centerline bars of 5 white lights each. In addition, there are side row bars containing 3 red lights each on either side of the centerline bars at each light station in the inner 1,000 ft. Also, this system has an additional light bar (4 white lights each) on either side of the centerline bar 500 ft from the threshold. These lights form a crossbar referred to as the 500-ft bar. The ALSF-2 operates on five intensity settings of 100%, 20%, 4%, 0.8%, and 0.16%.

Figure 7-21

ALSF-1

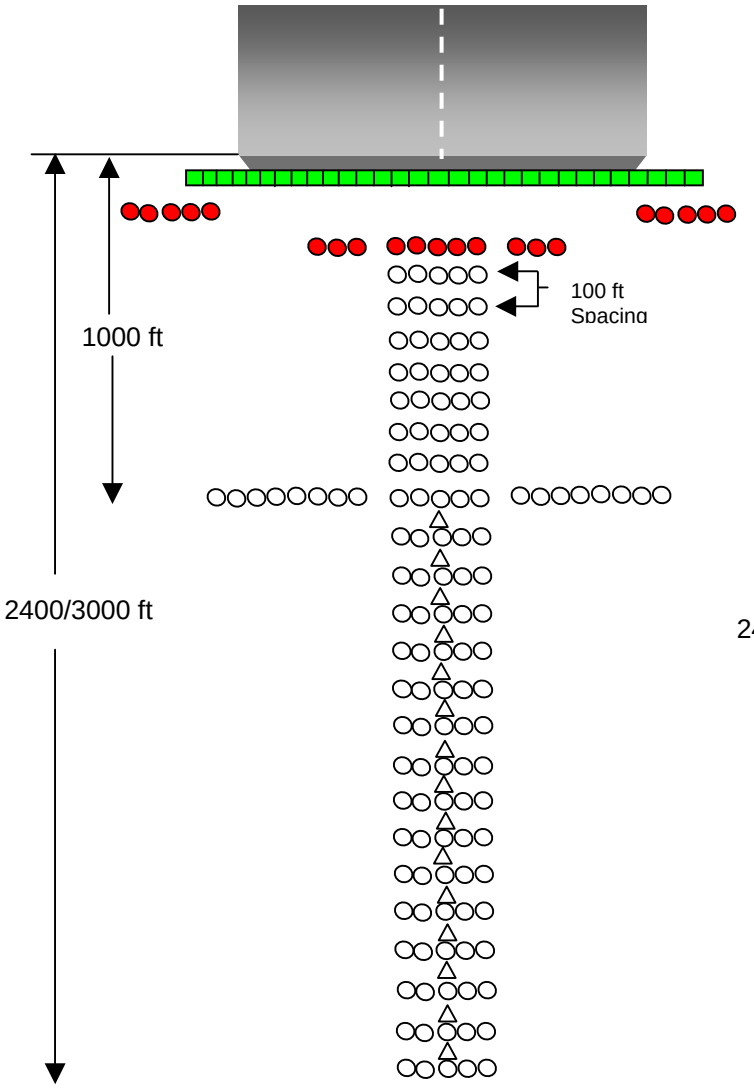

Figure 7-22

ALSF-2

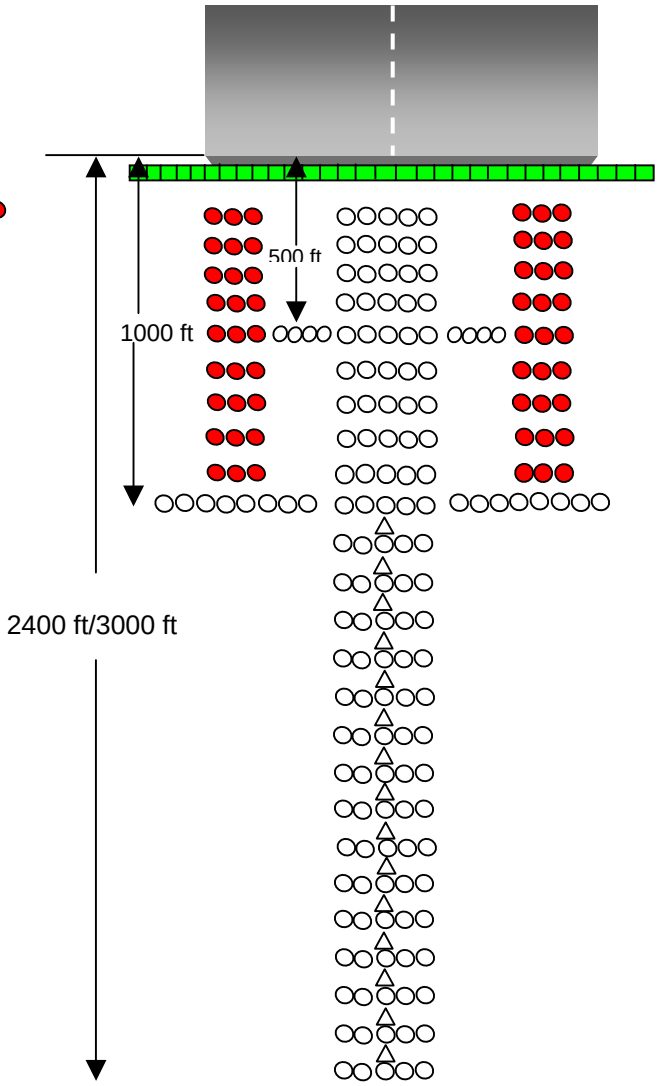

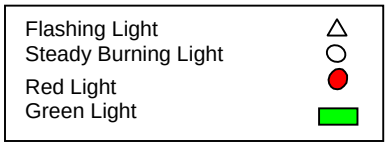

(4) Simplified Short Approach Lighting System (SSALS). Usually installed with SFL and designated as SSALF, or installed with Runway Alignment Indicator Lights (RAIL) and designated as SSALR. SSALS supports Category I systems. (See Figure 7-23) This is a 1,400-ft system and utilizes the standard ALS centerline light bar hardware and is capable of being upgraded to a standard 3,000-ft system. It consists of seven light bars of five white lamps each, spaced 200 ft apart, beginning 200 ft from the threshold. Two additional light bars, containing five white lamps each, are located on either side of the centerline bar at 1,000 ft from the runway threshold forming a crossbar 70 ft long. All lights in this system operate on three intensity settings of approximately 100%, 20%, and 4%. SSALR(s) may be incorporated as part of an ALSF-2 system for operational purposes. During IFR conditions, the full ALSF-2 system must be operating.

> **NOTE:** Some part-time control towers will leave just the SSALR(s) operational since Category II operations and subsequent use of ALSF-2 lights require a manned control tower.

(a) SSALSF (SSALR with SFL). This system is identical to the SSALS system, except for the addition of three sequenced flashers located on the runway centerline at the outer three light bar stations. These flashers assist pilots in making early identification of the system in areas of extensive ambient background light. The sequenced flashers have an "on-off" switch and will operate on all intensity settings of the steady burning lights.

(b) SSALR (SSALS with RAIL). This is a 3,000-ft system and is identical to the SSALS, except that five sequenced flasher lights spaced 200 ft apart are added on the centerline, beginning 200 ft beyond the end of the SSALS system. The sequenced flashers have a separate on-off switch but do not have a separate intensity control; they operate with all intensity settings of the steady burning lights and runway edge lights.

(5) Medium Intensity Approach Lighting System (MALS). Usually installed with SFL and designated as MALSF, or installed with RAIL and designated as MALSR. MALS supports Category I systems and non-precision approaches. This system is 1,400 ft in length, consisting of seven light bars of five lamps each, located on the runway centerline, extended and spaced 200 ft apart. Two additional light bars are located on either side of the centerline bar at 1,000 ft from the runway threshold. All lights in this system operate on two intensity settings, 100% and 10%, controlled through the runway edge lighting system.

(a) MALSF (MALS with SFL). This system is identical to the MALS, except that three sequenced flasher lights are located at the outer three light bar stations. These sequenced flashers do not have an intensity control; they operate on both intensity settings of the steady burning lights.

(b) MALSR (MALS with RAIL). This system is the same as a MALS configuration, except that five sequenced flashers are added on the extended runway centerline, beginning 200 ft beyond the outer end of the MALS system and extending out at 200-ft intervals to 3,000 ft. The MALSR and SSALR may have an overall length of 2,400 ft at locations where the glideslope is greater than 2.75°. The MALSR may be used with precision navigation aids, i.e., PAR, ILS.

Figure 7-23

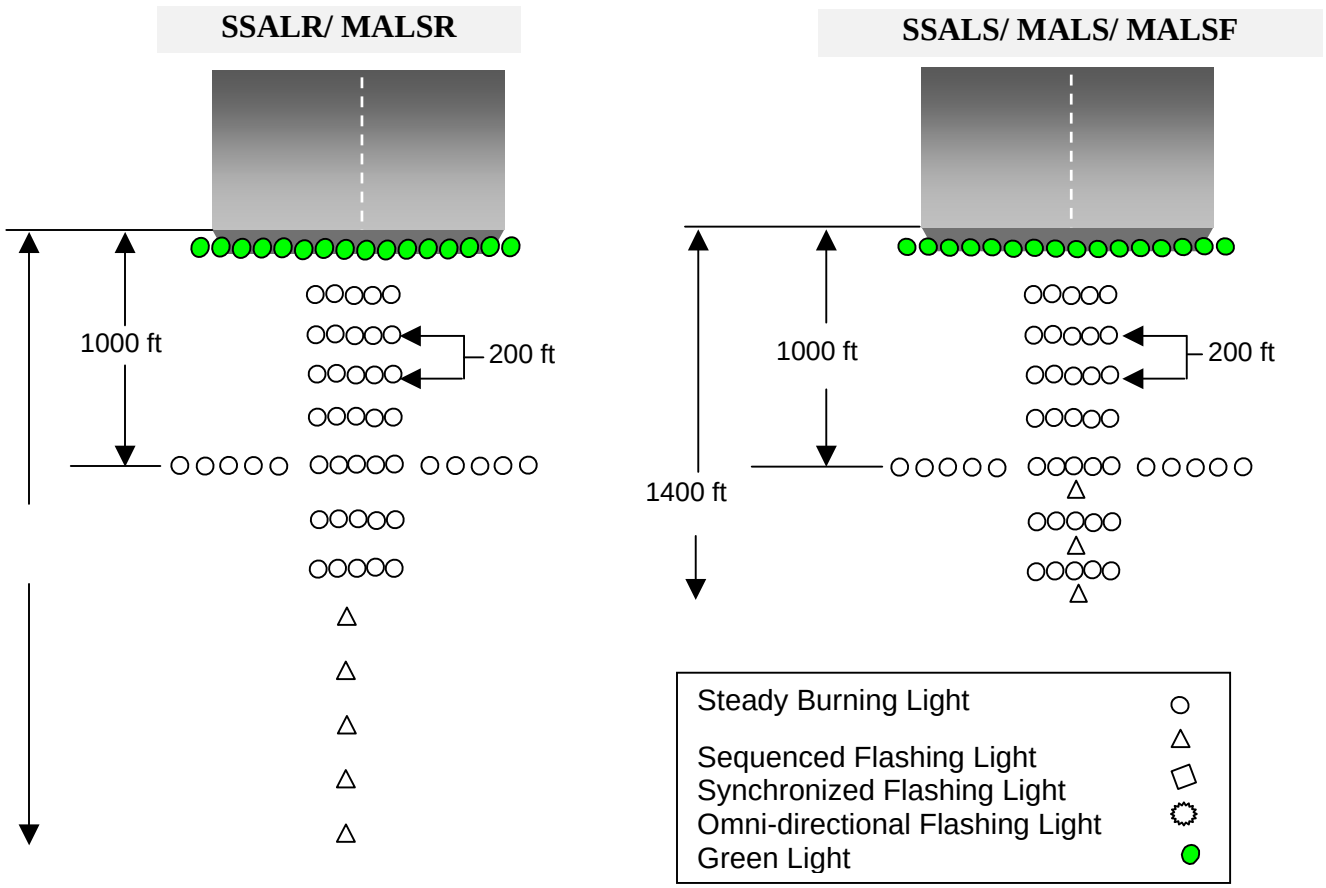

(6) Omni-directional Approach Lighting System (ODALS) supports non-precision approaches. ODALS consists of seven omnidirectional flashing lights. Five lights are located on the runway centerline extended, with the first light located 300 ft from the threshold and extending at equal intervals up to 1,500 ft from the threshold. The other two lights are located, one on each side of the runway threshold. They should flash in sequence toward the runway threshold at a rate of once per second, with the two lights located on each side of the runway flashing simultaneously.

Figure 7-24
ODALS

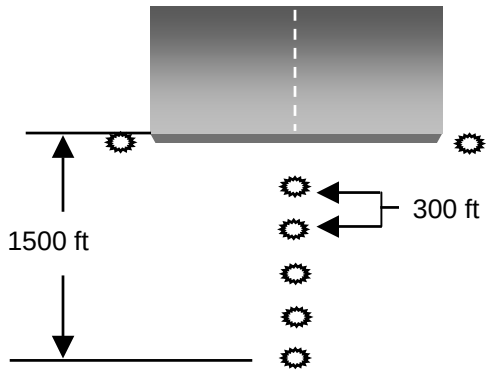

(7) Runway End Identifier Lights (REIL) provide rapid and positive identification of the approach end of a particular runway. REIL do not provide course alignment, descent, or altitude information. The system consists of a pair of synchronized flashing lights located laterally on each side of the runway threshold. REIL systems may be either omni-directional or unidirectional facing the approach area.

(a) Unidirectional REIL (Figure 7-P). Unidirectional REIL are installed where environmental conditions require that the area affected by the flash from the REIL will be greatly limited. Unidirectional REIL systems have a flash rate of 120 flashes per minute (± 10%), and a beam pattern of 10° vertical and 30° horizontal. Installation instructions call for the beam axis of an unbaffled unit to be aligned 15° outward from a line parallel to the runway and inclined at an angle 10° above the horizontal. If this standard setting is operationally objectionable, optical baffles are provided and the beam axis of the unit is oriented 10° outward from a line parallel to the runway centerline and inclined at an angle of 3°above horizontal.

(b) Omni-directional REIL, (OD REIL) system provides good circling guidance and is the preferred system. OD REIL systems have a flash rate of 60 flashes per minute (± 10%), and a beam pattern from 2 to 10° above horizontal.

NOTE: These approach lighting system configurations are identified as the United States Standard. While there are other lighting system configurations in existence, no attempt has been made to describe all systems in this section since they are considered nonstandard lighting systems. Where it is necessary to make an in-flight evaluation of non-standard systems, the flight inspector must determine that they fulfill the operational requirements for which they are installed and do not create signals that might be misleading or hazardous.

Figure 7-25
REILS

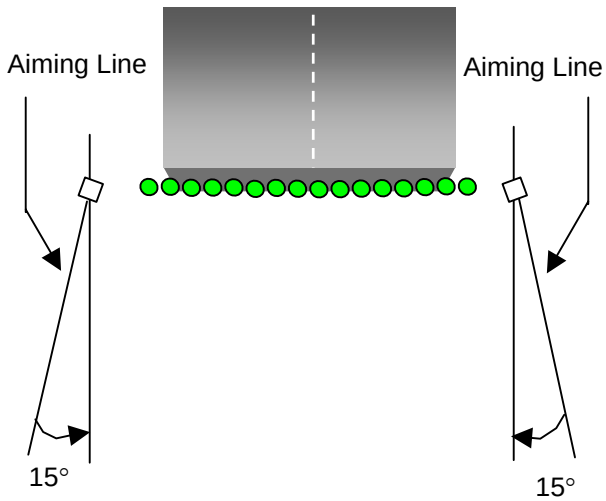

c. Runway Lighting Systems. Runway lighting is used to outline the edges of runways during periods of darkness or restricted visibility. These light systems are classified according to the intensity they are capable of producing.

(1) Runway Edge Lighting

(a) Standard runway edge lights are white, except on instrument runways where amber lights replace the white lights on the last 2,000 ft (or one half the runway length, whichever is less) to form a caution zone for landings. Only one side of the light is amber; the other side remains white, allowing use for both ends of the runway for landing. They are classified as one of the following: High Intensity Runway Lights (HIRL), Medium Intensity Runway Lights (MIRL), or Low Intensity Runway Lights (LIRL)

(b) The lights marking the ends of the runway emit red lights toward the runway to indicate the end of the runway toward departing aircraft, and emit green lights toward aircraft on approach to indicate the threshold to landing aircraft.

(c) Displaced runway thresholds have the threshold lights installed laterally outside the edges of the runway.

(2) Centerline Lighting (CL). Runway centerline lights are located along the centerline of the runway length. To prevent conflict with the centerline pavement markings, centerline lights may be offset by as much as 2 ft either side of the marking. To prevent possible interference with aircraft exiting the runway, on major taxiway turnoffs the lighting should be located on the opposite side of the centerline pavement marking. Until the last 3,000 ft of runway, the centerline lights are white. The last 3,000 ft of the lighting is color-coded as alternating red and white lights (from 3,000-1,000 ft of remaining runway) or red lights (last 1,000 ft of runway) to aircraft approaching the runway end. They appear as white lights to aircraft proceeding in the other direction on the runway.

(3) Touchdown Zone Lighting (TDZL). Touchdown zone lighting consists a series of two rows of light bars, each consisting of three lights each, located symmetrically about the runway centerline with the first light bars located 100 ft from the runway threshold. The bars are spaced 100 ft apart and are installed on the first 3,000 ft of runway or, for runways less than 6,000 ft in length, on the first half of the runway.

d. Other Airport Lighting

(1) Other airport lighting installed may include taxiway edge lights, taxiway centerline lights, taxiway lead-off lights, land and hold short lights, apron lights, runway guard lights, stop bar lights, clearance bar lights, or airport beacons.

(a) Some airports have "Surface Movement Guidance and Control System" (SMGCS) or similar systems installed for low visibility operations.

(b) Details of these lighting systems, which do not normally required flight inspection, are contained in various Advisory Circulars available on FAA websites.

e. Pilot Control of Airport Lighting

(1) Radio control of lighting is available at selected airports to provide airborne control of lights by keying the aircraft's transmitter. Normally, all lighting systems that are radio controlled at an airport, whether on a single runway or multiple radios, operate on the same radio frequency.

(2) The control system consists of a 3-step control responsive to 7, 5, and/or 3 transmitter clicks.

(3) Lighting is normally set up to remain illuminated for a period of 15 minutes. All lighting is illuminated from the most recent time of activation and may not be extinguished prior to the end of the cycle (except for 1-step and 2-step REIL(s) that may be turned off when desired by keying the transmitter 5 or 3 times respectively).

Table 7-4

RUNWAYS WITH APPROACH LIGHTS

Lighting System	No. of Int. Steps	Status During Nonuse Period	Intensity Step Selected Per No. of Mike Clicks		
Approach Lights (Med. Int.)	2	Off	Low	Low	High
Approach Lights (Med. Int.)	3	Off	Low	Med	High
HIRL	3	Off or Low	†	†	†
MIRL	5	Off or Low	†	†	†
VASI	2	Off	◊	◊	◊

† Predetermined intensity step.
◊ Low intensity for night use. High intensity for day use as determined by photocell control.

Table 7-5

RUNWAYS WITHOUT APPROACH LIGHTS

Lighting System	No. of Int. Steps	Status During Nonuse Period	Intensity Step Selected Per No. of Mike Clicks		
			3 Clicks	5 Clicks	7 Clicks
HIRL	3	Off or Low	Low	Med	High
MIRL	5	Off or Low	Step 1 or 2	Step 3	Step 5
LIRL	1	Off	On	On	On
VASI☆	2	Off	◊	◊	◊
REIL☆	1	Off	Off	On/Off	On
REIL☆	3	Off	Low	Med	High

◊ Low intensity for night use. High intensity for day use as determined by photocell control.
☆ The control of VASI and/or REIL may be independent of other lighting systems.

7.22 FLIGHT INSPECTION PROCEDURES

a. Approach Lighting Systems

(1) Maneuvering. For a precision approach, fly the final segment on the precision glideslope. For a non-precision approach, fly at the lowest MDA to a point where an approximate 3.00° glidepath begins, transitioning to the approximate 3.00° glidepath, observe the light system gives appropriate indication for safe pilotage.

(2) AFIS/ Equipment Setup. There is no requirement for AFIS. It may be helpful to program the ILS-3 mode with ILS associated with the lighting system for distance and degrees offset information. GPS mode may sometimes be used for airports without a precision approach.

(3) Analysis

(a) Evaluate light intensity by sequencing through the normal intensity settings to determine that the relative brightness of each intensity setting is uniform. All light units should be operating with the proper filters in place, corresponding to the type of system installed.

(b) Determine if each light and light bar is properly aimed for associated approach type. The flight inspector will identify any lights or light bars that are inoperative or misaligned. Improper alignment, up or down, can be detected by positioning the aircraft above and below the normal approach path.

(c) Evaluate the pilot control lighting feature for satisfactory operation on commissioning and subsequent inspections.

(4) Other Considerations

(a) Inoperative approach lighting systems may increase the visibility minimums of SIAP(s). Inoperative sequenced flashing lights, apart from the basic approach lighting system, may also cause an increase in visibility minimums. Once a lighting aid NOTAM is issued, there is no need for the issuance of procedural NOTAM, as the SIAP Inoperative Table or separately published minimums provides pilots with the necessary adjustments.

(b) If the pilot control lighting feature is inoperative, initiate NOTAM action and attempt to contact the airport authority to have the lights manually activated for night or IMC use.

(c) Approach lights, except semi-flush lights, are aimed vertically to a point on the ILS or PAR glide path 1,600 ft in advance of the light; therefore, it is necessary that the aircraft be positioned on the glide path for proper evaluation. For non-precision type navigational facilities, a three-degree glide path angle is simulated for aiming purposes.

b. Runway Lighting Systems

(1) Maneuvering. Position the aircraft as needed to evaluate the lighting system as it will be seen by any aircraft using the system during normal operations.

(2) A**FIS/ Equipment Setup.** There is no requirement for AFIS. It may be helpful to program the ILS-3 mode with ILS associated with the lighting system for distance and degrees offset information. GPS mode may sometimes be used for airports without a precision approach.

(3) Analysis

(a) Evaluate light intensity by having the runway lighting system sequenced through the intensity settings to determine that the relative brightness of each intensity setting is uniform. All light units should be operating with the proper filters in place, depending upon the system installed.

(b) Evaluate the pilot control lighting feature for satisfactory operation on commissioning and subsequent inspections.

(4) Special Considerations. If the pilot control lighting (PCL) feature is inoperative, initiate NOTAM action and attempt to contact the airport authority to have the lights manually activated for night or IMC use.

7.23 TABLES AND SUPPLEMENTAL INFORMATION (Reserved)

This Page Intentionally Left Blank

CHAPTER 8. COMMUNICATIONS

TABLE OF CONTENTS

Paragraphs *Title* *Pages*

SECTION 1. ULTRA-HIGH FREQUENCY (UHF)/ VERY HIGH FREQUENCY (VHF)

8.10 INTRODUCTION 8-1

8.11 PREFLIGHT REQUIREMENTS 8-1

8.12 FLIGHT INSPECTION PROCEDURES 8-1

8.13 DETAILED PROCEDURES 8-1
a. Coverage 8-1
b. Flight Profiles 8-1
c. Additional Frequencies 8-1
d. Light Gun Signals 8-1
e. Standby Equipment 8-2
f. Terminal Communications (TCOM) 8-2
g. En Route Communications (ECOM) 8-2
h. Automatic Terminal Information Service (ATIS) 8-2
i. Automated Weather Observing System (AWOS)/ Automated Surface Aviation Observing System (ASOS) 8-2
j. Transcribed Weather Broadcast 8-2

8.14 ANALYSIS 8-2

SECTION 2. DIRECTION FINDING STATIONS (DF)

8.20 INTRODUCTION 8-3

8.21 MAINTENANCE ACTIONS AND FLIGHT INSPECTION REQUIREMENTS 8-3
a. Activities Requiring a Confirming Flight Inspection 8-3
b. Activities Requiring a Confirming Flight Inspection or Regional Authorization 8-3

TABLE OF CONTENTS

Paragraphs	*Title*		*Pages*
8.22		FLIGHT INSPECTION PROCEDURES	8-4
	a.	General Information	8-4
	b.	Bearing Accuracy Check	8-4
	c.	Orbits	8-6
	d.	Preliminary Station Alignment	8-8
	e.	Communications and Coverage	8-8
	f.	Station Passage	8-9
	g.	Operator Performance	8-9
	h.	Standby Power	8-9
	i.	Emergency DF Approaches	8-10
	j.	Standby Equipment	8-10
8.23		TABLES AND SUPPLEMENTAL INFORMATION (Reserved)	8-10

Figures

Figure 8-1	Bearing Accuracy Flight Profile	8-5
Figure 8-2	Orbit Flight Profile	8-6

CHAPTER 8. COMMUNICATIONS

SECTION 1. ULTRA –HIGH FREQUENCY (UHF)/ VERY HIGH FREQUENCY (VHF)

8.10 INTRODUCTION. Air/ ground communications services within the NAS are classified according to function. En route communications (ECOM) is the service provided between ARTCC controllers and pilots, and includes Remote Center Air/ Ground Communications (RCAG) and Backup Emergency Communications (BUEC) facilities. Terminal communications (TCOM) is the service provided between approach and departure controllers and pilots in terminal airspace, including RCF and ATCT facilities. FSS communications (FCOM) is the service provided between the FSS and the pilot and is advisory in nature, such as EFAS. Other advisory services include ATIS, AWOS, and ASOS, all of which may be transmitted on a NAVAID or a discrete communications frequency.

8.11 PREFLIGHT REQUIREMENTS. The flight inspector must prepare for the flight inspection in accordance with the procedures outlined in Chapter 4. Coverage requirements, including tailored sector definitions, must be provided by local facility maintenance and air traffic personnel.

8.12 FLIGHT INSPECTION PROCEDURES. The performance of communications facilities is accurately predicted by computer-aided modeling. Therefore, commissioning inspections are only required when requested by facilities maintenance engineering. Periodic inspections must be conducted on a surveillance basis in conjunction with evaluation of associated navigation and air traffic control facilities.

8.13 DETAILED PROCEDURES

a. Coverage. When coverage cannot be predicted by facility engineering, a flight inspection will be requested. Evaluate facilities where the minimum en route altitude (MEA) is determined by communications coverage. During requested commissioning inspections, coverage must be determined by the air traffic service requirements established locally**.**

b. Flight profiles may vary according to the local requirements and could include an orbit or a detailed sector evaluation. Communications for fixes, hand-off positions, changeover points, or controlled airspace must be checked.

c. Additional frequencies assigned to the same service requirement will not require a complete inspection, but should be evaluated on a surveillance basis.

d. Light Gun Signals must be checked for adequate coverage on the ground and in flight.

e. Standby equipment must be checked during any requested commissioning inspection.

f. Terminal Communications (TCOM) includes tower, ground control, clearance delivery, departure, arrival, and light gun communications. Commissioning inspections, when requested, must be conducted at the extremities of the airport to determine if there are blind spots and adequate coverage. Departure and arrival frequencies must be checked to verify service throughout the established sector volume.

g. En route Communications (ECOM) includes VHF and UHF air/ ground frequencies and BUEC channels. When requested, these frequencies must be evaluated throughout the established sector service volume.

h. Automatic Terminal Information Service (ATIS) broadcast on a NAVAID facility must be commissioned and reported with that NAVAID. Coverage should be the same as the NAVAID. When commissioning is requested, ATIS broadcast on a discrete communications frequency must be checked in accordance with local requirements, but not to exceed a maximum of 60 nm and 25,000ft AGL. Departure ATIS must be verified at the airport extremities.

i. Automated Weather Observing System (AWOS)/Automated Surface Aviation Observing System (ASOS). These systems provide local weather observations and may be broadcast on a NAVAID or a discrete VHF communications frequency. Transmission on a NAVAID must be verified.. Local altimeter settings from these systems can result in lower minimums for standard instrument approach procedures. Whenever this occurs, ensure that the associated procedure has been flight inspected to the new minimum prior to publication. When AWOS/ ASOS is used as the primary airport altimeter source, flight inspection must verify reception at or before the initial approach fix (IAF).

j. Transcribed Weather Broadcast (TWEB). This system broadcasts route-oriented data with specially prepared National Weather Service forecasts, inflight advisories, and winds aloft plus pre-selected current information, such as routine or special weather reports (METAR/SPECI), NOTAM(s), and special notices. The data is broadcast continuously over selected L/MF and H NDB(s) and/or VOR(s).

8.14 ANALYSIS. Unsatisfactory conditions must be brought to the attention of the appropriate air traffic control and facilities maintenance personnel.

SECTION 2. DIRECTION FINDING STATIONS (DF)

8.20 INTRODUCTION. DF equipment is of particular value in locating disorientated aircraft. Direction finding stations use normal VHF or UHF transmissions from aircraft to determine bearing information from the ground station. DF equipment is usually installed and operated by Flight Service Stations (FSS). Most installations of DF allow for the selection of any VHF communications frequency, but flight inspections are conducted on those frequencies specified for FSS use in the DF service volume. In some locations, DF facilities have the capability of providing an emergency approach procedure to an airport.

8.21 MAINTENANCE ACTIONS AND FLIGHT INSPECTION REQUIREMENTS

a. Activities *Requiring* a Confirming Flight Inspection. The entire DF antenna array has been replaced, or any dipole elements have been repaired or replaced. All parameters are within normal operating tolerances.

b. Activities *Requiring* a Confirming Flight Inspection or *Regional Authorization*. Doppler DF antenna systems--when no more than three dipole elements of the array have been repaired or replaced, the requirement for a flight inspection may be waived by the region, provided the following conditions are met:

(1) The ground check is within initial tolerances.

(2) Satisfactory operation of the DF is confirmed through two or more aircraft targets-of-opportunity.

(3) Air Traffic personnel have received a pilot report that a facility has an error exceeding 6°, and the report has been verified by a bearing check of another aircraft in the same vicinity.

(4) The facility has been re-commissioned or certified following an extended interruption, modernization, or antenna relocation, or for any other reason determined by the region to justify flight inspection

8.22 FLIGHT INSPECTION PROCEDURES

a. General Information

(1) The use of AFIS to determine aircraft azimuth is considered the best practice for DF checks.

(2) A DF periodic check will consist of at least one bearing accuracy check within the service volume and at a minimum distance of 20 nm. The check should be conducted at a minimum altitude of 1,500 ft above facility elevation, an altitude that provides obstacle clearance in the area, or the lowest radio line of site altitude for the position of the aircraft, whichever is higher. If needed due to weather or other circumstances, the check can be conducted at the minimum IFR altitude for the area.

(3) The mission specialist should key the radio for approximately five seconds. **Annotate the bearing at the end of the 5-second transmission.** After the transmission, the DF operator should transmit the indicated DF bearing to the aircraft.

(4) The flight inspector will brief the DF operator and, if used, the theodolite operator, to avoid confusion during the inspection.

(5) For commissioning inspections, prepare a chart with the DF facility accurately plotted and appropriate radials, orbital ground track, selected ground checkpoints and azimuth, or other information added as needed. If a plotting board is used, orient the chart to the magnetic variation of the facility. The scale of the chart should be 1:500,000 or larger.

b. Bearing Accuracy Check. The bearing accuracy check is conducted to determine the ability of the DF facility to furnish accurate bearings throughout the service area, and provides the reference for other checks. DF bearing accuracy will be determined by comparing the indicated bearing received from the DF operator with the actual aircraft azimuth as determined using AFIS, theodolite, or ground checkpoints.

(1) Maneuvering

(a) AFIS. Position the aircraft either inbound or outbound within the service volume at least 20 nm from the DF antenna. Make a DF transmission that lasts approximately 5 seconds and note the indicated bearing at the end of the transmission. The difference between what is annotated and what the DF operator reads back is the bearing error.

Figure 8-1
Bearing Accuracy Flight Profile

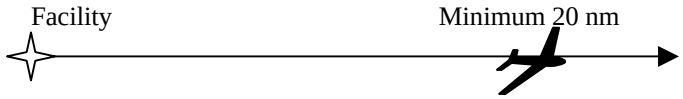

Aircraft Configuration

A/C	Speed KIAS	Flaps	Gear
CL601/ 4	170- 210	UP	UP
Lear 60	170- 200	UP	UP
BE300	170- 200	UP	UP
HS125	170- 200	UP	UP

(b) Ground Checkpoints. Position the aircraft over the selected ground checkpoint at the coverage altitude. Where possible, these checkpoints should be located at or near the limits of the DF and communication range to validate bearing accuracy and service volume simultaneously. Make a 5 second DF transmission and note the indicated bearing received from the operator at the end of the transmission and the plotted azimuth of the checkpoint.

(2) AFIS/ Equipment Setup

(a) AFIS. Program the AFIS FI Data page of the VORTAC mode with latitude, longitude, magnetic variation, and facility elevation. The AFIS system will be programmed for an RNAV radial flight path, either inbound or outbound.

(b) Ground Checkpoints. Select a prominent ground checkpoint that is identifiable from the air and plotted on the chart. Use the plotting board to determined the magnetic azimuth of the selected ground checkpoint.

(3) Analysis. Compare the determined actual azimuth with the indicated DF bearing received from the DF operator to determine the bearing error.

(4) Special Considerations

(a) DF coverage will not substantially exceed line-of-sight. Coverage is dependent on the aircraft transmitter power output, DF antenna height, terrain, and the effects of signal reflections.

(b) After completing a bearing accuracy check, station adjustment may be necessary to balance station error and keep all bearing within tolerance.

c. Orbits. Orbital inspections are used to determine individual bearing errors through various quadrants from the DF station. Actual aircraft azimuth is determined using AFIS, theodolite, or ground checkpoints. At least four bearing checks will be completed in each quadrant being inspected.

(1) Maneuvering. Orbit radius will be at the facility service volume or to satisfy operational requirements, whichever is less. For commissioning inspections, orbits will be flown at an altitude that will provide 1,500 ft. above facility elevation, 1,000 ft. (2,000 ft. in designated mountainous areas) of obstacle clearance, or the minimum altitude that will provide radio line of sight, whichever is higher.

(a) AFIS. Fly an AFIS RNAV, GPS, or FMS orbit. If using GPS or FMS for aircraft navigation, the facility coordinates will be loaded as a waypoint around which the orbit will be flown.

(b) Ground Checkpoints. Fly a GPS or FMS orbit, or establish a ground track using ground checkpoints at the orbit distance. If using GPS or FMS for aircraft navigation, the facility coordinates will be loaded as a waypoint around which the orbit will be flown.

Figure 8-2
Orbit Flight Profile

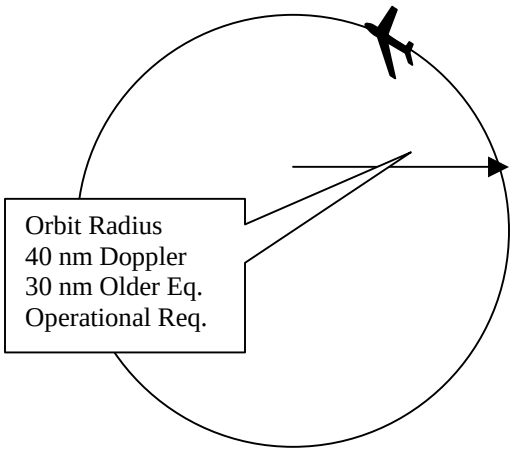

Aircraft Configuration

A/C	Speed KIAS	Flaps	Gear
CL601/4	170 - 200	UP	UP
Lear 60	170 - 200	UP	UP
BE300	170 - 200	UP	UP
HS125	170 - 200	UP	UP

(2) AFIS/ Equipment Setup

(a) AFIS. Program the AFIS FI Data page of the VORTAC mode with latitude, longitude, magnetic variation, and facility elevation. If desired, an event mark may be made on the recording at the position of each DF transmission; comparison can then be made to the 5° bearing marks on the recording.

(b) Ground Checkpoints. Select prominent ground checkpoints that are identifiable from the air and plotted on the chart. Use the plotting board to determine the magnetic azimuth of each selected ground checkpoint.

(3) Analysis

(a) AFIS. Compare the indicated bearing received by the DF operator with the AFIS aircraft azimuth to determine bearing error.

(b) Ground Checkpoints. Compare the indicated bearing received from the DF operator with the azimuth of each ground checkpoint to determine bearing error.

(4) Special Considerations

(a) If communications or bearing errors become unsatisfactory, climb to an altitude where communications can be satisfactorily established and/or bearing errors are satisfactory. If communications and bearing accuracy remain satisfactory on the next bearing check, descend to the minimum altitude that will provide satisfactory bearings and communications, whichever is higher, and continue the orbit. This procedure will define the lowest altitudes through the coverage area at which acceptable communications and bearing information can be expected, and will provide the basis for defining the usable service volume of the facility.

(b) Whenever bearing errors are very large in a particular area and normal elsewhere, it may be advisable to investigate the area further by checking radially or by partial orbits at different ranges.

(c) When unsatisfactory conditions cannot be corrected, the DF operator will be advised of the areas that are unusable. The unusable areas will be noted on the fight inspection report and the facility assigned a “restricted” classification. A NOTAM will not be issued, nor will the restriction be published elsewhere.

d. Preliminary Station Alignment. This check establishes the initial equipment alignment during a commissioning inspection.

(1) Maneuver. Maneuver the aircraft at an altitude that will assure radio line of sight with the DF station. Conduct a bearing accuracy check. If the bearing is in tolerance, begin a coverage orbit.

(2) AFIS/ Equipment Setup. Select an azimuth from the DF facility to establish alignment reference.

(3) Analysis. If the DF bearings are out of tolerance, or if the trends of DF bearing errors indicate that the facility alignment should be optimized, have facility maintenance adjust the alignment. Repeat the preliminary station alignment check.

(4) Other Considerations. If the bearings throughout the first quadrant are satisfactory, proceed with the orbit check for at least 90° of azimuth.

e. Communications and Coverage. Voice communication is the means for getting DF information to a pilot, and quality of communications greatly affects the capability of the DF to provide service.

(1) Maneuvering

(a) During a commissioning inspection, all frequencies proposed for use will be checked. If available for use, the emergency frequencies will also be checked. These checks may be accomplished on the orbit or during radial flight at the extremes of coverage.

(b) For periodic inspections, voice communications will be checked on all specified frequencies if less than four are used for DF bearings. If more than four frequencies are available, at least four frequencies will be checked. If available for use, the emergency frequencies will also be checked.

(2) AFIS/ Equipment Setup. Not applicable to this check.

(3) Analysis. Communications will be clear and readable throughout the service volume.

(4) Other Considerations. Specified frequencies are those normally used by the FSS in the geographical area.

f. Station Passage

(1) Maneuvering. Fly inbound to the DF antenna from a position at least 5 miles away from the DF antenna at an altitude of 1,500 feet above the antenna. Obtain sufficient steers from the DF operator to overfly the antenna.

(2) AFIS/ Equipment Setup. Not applicable to this check

(3) Analysis. Note the distance from the aircraft to the DF antenna when the operator reports station passage.

(4) Other Considerations. This check may be performed in conjunction with the DF approach procedure at the discretion of the pilot and DF operator.

g. Operator Performance. The flight inspector must determine that the overall system is safe and reliable.

(1) Maneuvering. Note the performance of the DF operator during the check. Request that the DF operator provide a steer to overfly the DF facility.

(2) AFIS/ Equipment Setup. Not applicable to this check.

(3) Analysis. The operator must be able to direct the aircraft over the facility, report station passage and provide pertinent information relative to the use of the DF service.

(4) Other Considerations. The operator should be able to direct the aircraft to a position from which a safe landing can be made if the DF facility supports an emergency approach procedure (DF approaches are not SIAP(s)).

h. Standby Power. If standby power is installed, have the facility power source switched to the standby source for the check.

(1) Maneuvering. An orbit on standby power will be performed at the same distances and altitudes as those for a commissioning profile.

(2) AFIS/ Equipment Setup. Program the AFIS FI Data page of the VORTAC mode with latitude, longitude, magnetic variation, and facility elevation. If desired, an event mark may be made on the recording at the position of each DF transmission; comparison can then be made to the 5° bearing marks on the recording.

(3) Analysis. Compare the two orbits, and ensure that all applicable tolerances are met.

(4) Other Considerations. Standby power checks are not required for facilities powered by batteries that are constantly charged by another power source. The Facility Data Sheet should indicate the source of standby power.

i. Emergency DF Approaches

(1) Maneuvering. Conduct the approach in accordance with the DF operator's instructions and evaluate the obstacle clearance and flyability in accordance with Chapter 6.

(2) AFIS/ Equipment Setup. Not applicable to this check.

(3) Analysis. The flight inspector will note the position of the aircraft relative to the airport and determine whether it will permit a safe landing.

(4) Other Considerations

(a) DF approaches are conducted during a commissioning check.

(b) Airways facilities personnel or DF facility operators may request a check of the approach during any inspection if, in their opinion, verification of the procedure, obstructions, or equipment performance is desired.

(c) There is no periodic requirement to check an Emergency DF approach.

j. Standby Equipment. If standby equipment is available, during a commissioning inspection, evaluate preliminary station alignment, bearing accuracy, alignment orbit, communication and coverage, station passage, and DF approaches on the standby transmitter during a commissioning inspection.

(1) Maneuvering. Maneuver the aircraft as specified in this section for each of the required checks.

(2) AFIS/ Equipment Setup. AFIS and equipment setup is a specified in this section for each of the required checks.

(3) Analysis. Standby equipment will meet the same operational tolerances as the primary equipment.

(4) Other Considerations.

8.23 TABLES AND SUPPLEMENTAL INFORMATION. (Reserved)

CHAPTERS 9 – 10

RESERVED

CHAPTER 11. RHO-THETA SYSTEMS

TABLE OF CONTENTS

Paragraphs *Title* *Pages*

SECTION 1. GENERAL

11.10 INTRODUCTION 11-1
a. General 11-1
b. Characteristics 11-1
c. Classification 11-1

11.11 FLIGHT INSPECTION RHO-THETA 11-3
a. General 11-3
b. Alternate AFIS Positioning Modes 11-4

11.12 MAINTENANCE ACTIONS AND FLIGHT INSPECTION REQUIREMENTS 11-4
a. VOR, DVOR, VOR/ DME, and VORTAC 11-4
b. VHF Omni-Range Test Facilities (VOT) 11-6

SECTION 2. VHF OMNIRANGE (VOR) and TACAN/ DME FLIGHT INSPECTION PROCEDURES

11.20 DETAILED FLIGHT PROCEDURES 11-6
a. Reference Radial Check 11-6
b. Monitor Reference Evaluation 11-8
c. En Route Radials 11-10
d. Intersection Radials/ DME Fixes 11-10
e. Terminal Radials/ Fixes (Approach, Missed Approach) 11-11
f. Orbital Evaluations 11-14
g. Expanded Service Volume 11-18
h. Receiver Checkpoints 11-19
i. Standby Transmitters 11-21
j. Standby Power 11-21
k. Associated Facilities 11-22

11.21 ANALYSIS 11-22
a Sensing and Rotation 11-22
b. Modulation Levels 11-23
c. ID 11-25
d. Signal Strength 11-26
e. Alignment 11-26

Paragraphs *Title* *Pages*

f. Roughness and Scalloping 11-26
g. Bends 11-26
h. Polarization 11-29
i. Voice 11-29

SECTION 3. DISTANCE MEASURING EQUIPMENT (DME)

11.30 DME COVERAGE 11-30
11.31 DISTANCE ACCURACY 11-30
a. Maneuvering 11-30
b. Analysis 11-30
c. Other Considerations 11-30
d. Erroneous Distance Information 11-31

11.32 IDENTIFICATION 11-31

11.33 DME COVERAGE 11-31

SECTION 4. SHIPBOARD TACAN

11.40 INTRODUCTION 11-32

11.41 DETAILED PROCEDURES 11-32

11.42 CHECKLIST 11-32

SECTION 5. VOR TEST FACILITY (VOT)

11.50 INTRODUCTION 11-34

11.51 GENERAL 11-34

11.52 CLASSIFICATION 11-34

11.53 DOCUMENTATION 11-34

11.54 PREFLIGHT REQUIREMENTS 11-35

11.55 FACILITIES MAINTENANCE PERSONNEL 11-35

11.56 FLIGHT INSPECTION PERSONNEL 11-35

Paragraphs *Title* *Pages*

11.57 FLIGHT INSPECTION PROCEDURES 11-35
a. Sensing 11-35
b. Modulation Levels 11-35
c. Identification 11-36
d. Frequency Interference 11-36
e. VOT Reference Point 11-36
f. Alignment 11-37
g. Coverage 11-38
h. Monitor 11-38
i. Standby Power 11-39

SECTION 6. TABLES

11.60 TABLES
Table 11-6 Intersections (Coverage) 11-40

FIGURES

Figure 11-1A Standard High Altitude Service Volume 11-2
Figure 11-1B Standard Low Altitude Service Volume 11-2
Figure 11-1C Standard Terminal Service Volume 11-2
Figure 11-2A Service Volume Lower Edge Terminal 11-3
Figure 11-2B Service Volume Lower Edge Standard High and Low 11-3
Figure 11-3 AFIS Reference Radial Maneuver 11-7
Figure 11-4 Terminal Radials/ Fixes (Approach, Missed Approach) Maneuver 11-12
Figure 11-5 Alignment Orbit 11-14
Figure 11-6 Coverage Orbit 11-17
Figure 11-7 Airport Surface Markings 11-20
Figure 11-8 Receiver Checkpoint Signs 11-20
Figure 11-9 VOR Sensing and Rotation 11-22
Figure 11-10 TACAN Sensing and Rotation 11-23
Figure 11-11A Bends 11-27
Figure 11-11B Structure 11-28

TABLES

Table 11-1 Classifications for Rho-Theta Systems 11-1
Table 11-2A Reference Radial Check (Periodic) 11-6
Table 11-2B Reference Radial Check (Establishment) 11-7
Table 11-3 Monitor Reference Evaluation 11-9
Table 11-4 TACAN Modulation Levels 11-24
Table 11-5 VOT Classification 11-34
Table 11-6 Intersections (Coverage) 11-40

This Page Intentionally Left Blank

CHAPTER 11. RHO-THETA SYSTEMS

SECTION 1. GENERAL

11.10 INTRODUCTION

a. General. A VOR operates in the VHF frequency range from 108 – 118 MHz. They share this frequency range with ILS Localizers, the Localizers operating on the odd (100 KHz) frequencies and the VOR operating on the even frequencies. TACAN and DME are separate components but operate in the same frequency range. TACAN/ DME operates in the UHF frequency range from 960 – 1215 MHz. A VOR and TACAN or DME are considered collocated as follows:

(1) Standard VOR used in terminal areas for approach procedures, the separation of the VOR antenna and the associated DME or TACAN antenna must not exceed 100 ft.

(2) Doppler VOR used in terminal areas for approach procedures, the separation of the VOR antenna and the associated DME or TACAN antenna must not exceed 260 ft.

(3) Any non-terminal procedures, where the highest position-fixing accuracy of the system is required, the antenna separation limits of subparagraphs (1) and (2) apply.

(4) For all other procedures, the separation of a VOR antenna and associated DME or TACAN antenna must not exceed 2,000 ft.

b. Characteristics. VOR, TACAN, and DME are "line of site" facilities; coverage is greatly affected by intervening terrain and objects that cause reflections of the radiated signal. There are two unique channels for TACAN and DME transmitters, "X" and "Y" with X using 12 µs pulse spacing and Y using 30 µs pulse spacing, because of this difference in pulse spacing a TACAN or DME transmitter is capable of being one of 252 discreet channels with 1 MHz spacing, 126 X channels and 126 Y channels.

c. Classification. The classifications for Rho-Theta systems is determined by the Standard Service Volume (SSV) as follows:

Table 11-1

SSV CLASS DESIGNATOR	ALTITUDE & RANGE BOUNDRIES
T (Terminal)	From 1,000' AGL up to and including 12,000' AGL at radial distances out to 25 nm.
L (Low Altitude)	From 1,000 AGL up to and including 18,000' AGL at radial distances out to 40 nm
H (High Altitude)	From 1,000' AGL up to and including 14,500' AGL at radial distances out to 40 nm. From 14,500' AGL up to and including 60,000' AGL at radial distances out to 100 nm. From 18,000' AGL up to and including 45,000' AGL at radial distances out to 130 nm.

Figure 11-1A
Standard High Altitude Service Volume
(See Figure A11-6 for altitudes below 1,000 ft.)

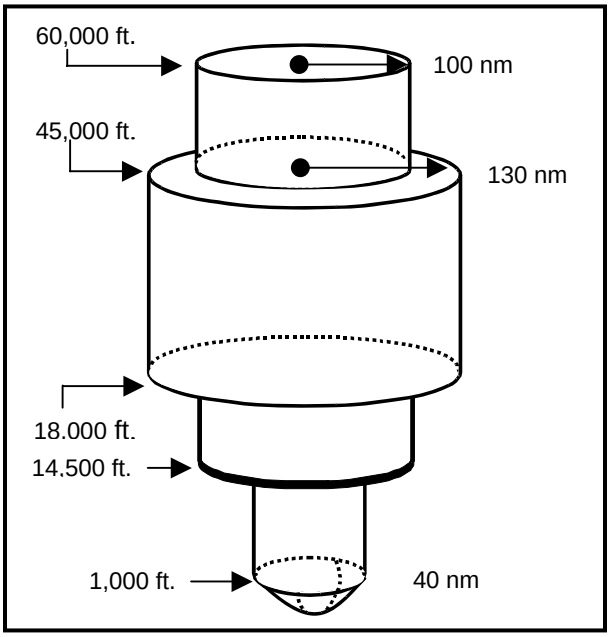

Figure 11-1B
Standard Low Altitude Service Volume
(See Figure A11-6 for altitudes below 1,000 ft.)

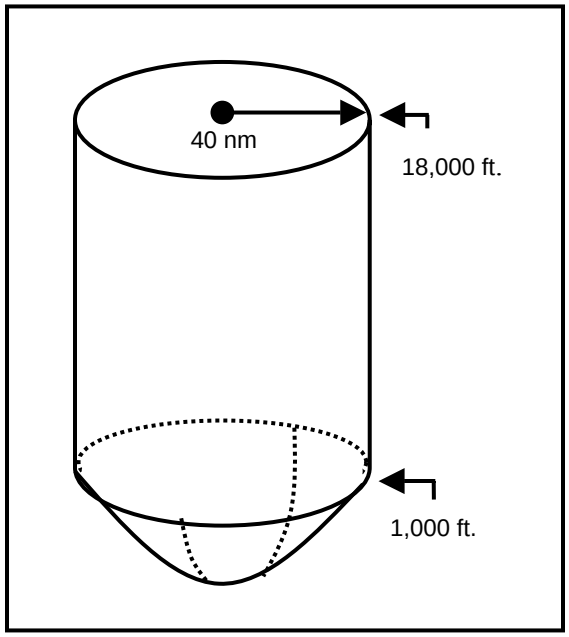

Figure 11-1C
Standard Terminal Service Volume
(See Figure A11-5 for altitudes below 1,000 ft.)

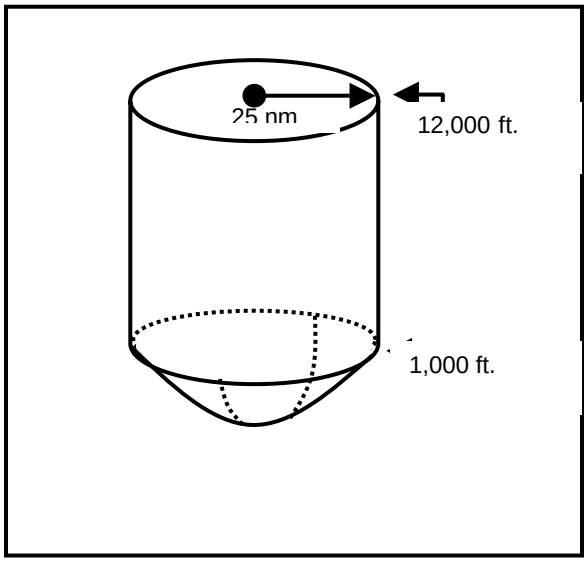

Figure 11-2A
Service Volume Lower Edge Standard High and Low Class

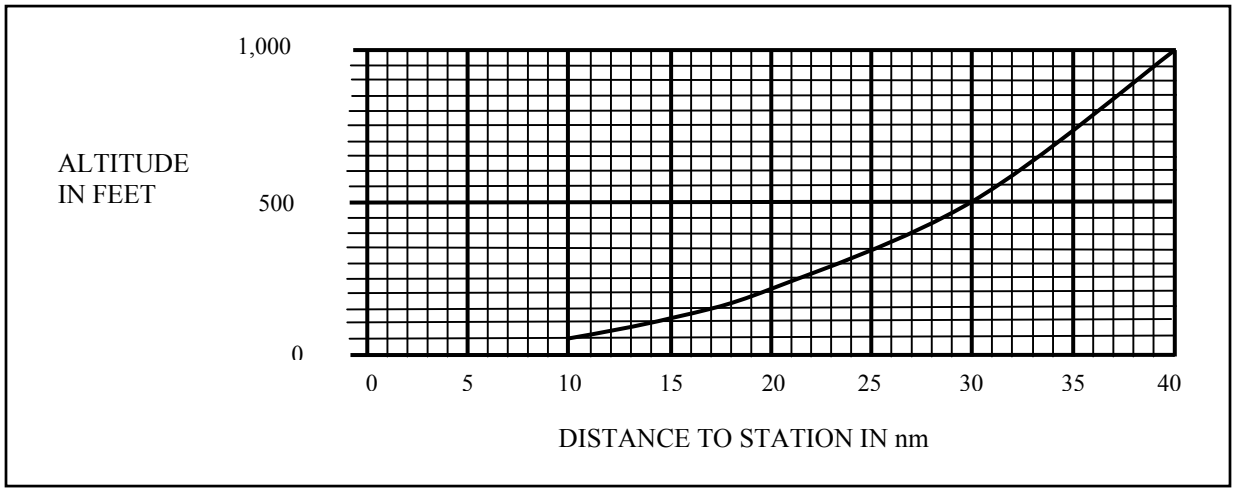

Figure 11-2B
Service Volume Lower Edge Standard Terminal Class

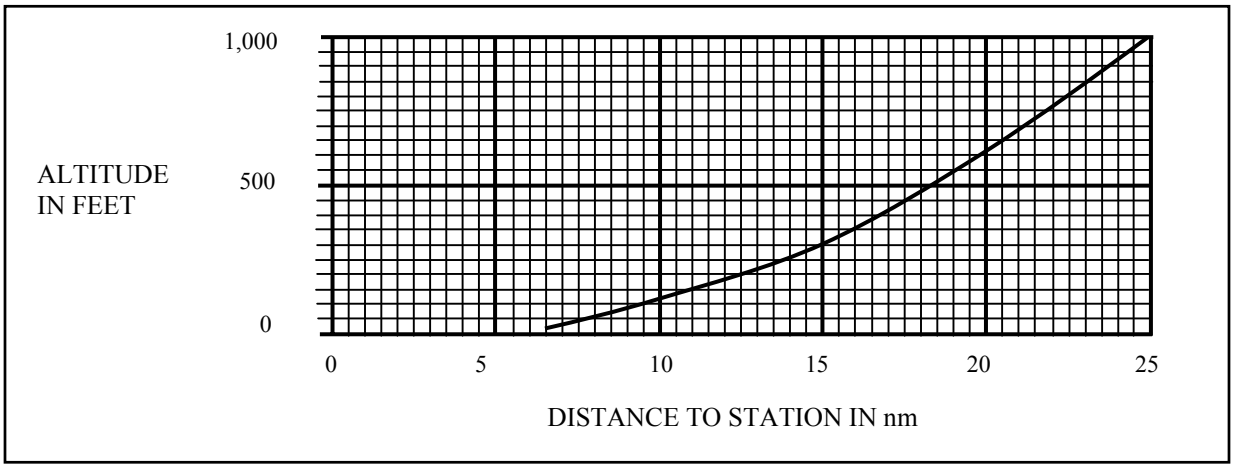

11.11 FLIGHT INSPECTION RHO-THETA

a. General. The accuracy of the Automatic Flight Inspection System (AFIS) measurement is dependent on precise aircraft positioning. Position updating is defaulted to the Hybrid Mode, Global Positioning System (GPS), and is the Preferred Flight Inspection positioning Method for all RHO-THETA inspections.

b. Alternate AFIS Positioning Modes. FI-DME: AFIS automatically selects DME facilities in the vicinity of the facility under test to provide position updates. MN-DME: the Mission Specialist manually enters DME for AFIS positioning. The PIC may change to FI DME or MN DME Mode if the Hybrid Mode is not operable or suspect for position accuracy. Either mode will require flying an altitude for adequate DME reception.

(1) AFIS must not be used for measurement inside 5nm from the facility when using Hybrid Mode (GPS) positioning.

(2) AFIS must not be used for measurement inside 10 nm from the facility when using FI-DME or MN-DME Mode positioning.

(3) When automatic AFIS positioning is not available, use of Ground Checkpoint Method or Theodolite is acceptable.

11.12 MAINTENANCE ACTIONS AND FLIGHT INSPECTION REQUIREMENTS

a. VOR, DVOR, VOR/ DME, and VORTAC

(1) Activities **Requiring** a Confirming Flight Inspection:

(a) Major changes in local obstructions or buildings, which may affect the signal strength, coverage, or courses.

(b) Replacement or installation of the TAC/ DME antenna or RF subassemblies (excluding transmission lines) of the antenna.

(c) Modernization or corrective maintenance of a major nature to the counterpoise, such as extension of the counterpoise.

(d) A change in facility operating frequency.

(e) A change in output power level for the purpose of increasing or decreasing service volume.

(f) The installation and operation of the TACAN antenna (with no change to the VOR antenna system).

(g) Those activities stated in subparagraph (b) below, when standard ground references cannot be reestablished.

(h) The replacement or modification of the test generator if the tolerances for ground check cannot be met.

(2) Activities that **Do Not Require** a Confirming Flight Inspection. Maintenance may accomplish the following without a confirming flight inspection:

(a) The replacement of any or all solid-state components.

(b) The replacement or repair of equipment components or units.

(c) The complete tuning of the transmitter.

(d) The measurement and adjustment of all modulation levels.

(e) Phasing adjustments

(f) The replacement of Doppler VOR distributor.

(g) The installation or relocation of the DME mast, the TAC monitoring pole, or a Remote Communications Outlet (RCO) antenna pole (if accomplished in accordance with current instructions).

(h) The replacement of the polarizer when reset to the previous setting, or readjustment of the polarizer when a portable ground polariscope is used to optimize the facility for minimum vertical polarization.

(i) The installation or replacement of obstruction lights, or the painting of the antenna shelter.

(j) The Replacement of the RTA-2 upper and lower bearings, the spin motor, and the radome.

(k) Accomplishment of other maintenance procedures, such as refurbishment of VOR/ DVOR counterpoise, wood decking, and/or terenplate, provided conditions are restored to those that existed at the time of the last flight inspection (as reflected in facility records) and ground check is within $\pm 0.2^0$ of the reference ground check.

(l) Accomplishment of other maintenance procedures, such as any or all of the following, provided conditions are restored to those that existed at the time of the last flight inspection (as reflected in facility records).

1 The repair, alignment, or replacement of the goniometer.

2 The repair, replacement, modification, or repositioning of any fixed field detector used for facility monitoring.

3 The replacement or modification of any signal evaluation element in the monitors.

4 The adjustment or replacement of the RF transmission lines (including feedlines, stubs, positioners, and bridges, either coaxial or hybrid).

5 The adjustment or replacement of the VOR antennas or components (including pedestals, loops, baluns, and supporting braces).

6 The replacement, repair, or modification of test equipment. (For the VOR/ DVOR, if unable to make before and after measurements, a confirming flight inspection will not be required if the tolerances for ground check are met.)

b. VHF Omni-Range Test Facilities (VOT)

(1) Activities **Requiring** a Confirming Flight Inspection:

(a) Changes in output power or attenuator settings that would affect station coverage.

(b) Replacement of the antenna.

(c) Major change in local airport obstructions, buildings, etc., that may affect the minimum signal strength and coverage.

(2) Activities **Not Requiring** a Confirming Flight Inspection:

(a) All maintenance activities, such as replacement or repair of modules, solid state components, and transmission lines in the transmitter, monitor, or remote status and control unit (RSCU).

(b) Adjustments to the transmitter, monitor, or RSCU, as long as all parameters are returned to the reference value.

SECTION 2. VHF OMNIRANGE (VOR) and TACAN/ DME FLIGHT INSPECTION PROCEDURES

11.20 Detailed Flight Procedures

a. Reference Radial Check. A Reference Radial (ARR) must be established when establishing an orbital reference and evaluated during subsequent checks. The AFIS segment or checkpoint will be used as a reference for subsequent checks of course alignment and airborne monitor evaluations. Evaluate the same segment in the same direction at the established altitude during subsequent inspections. An approach radial is recommended as the reference.

Table 11-2A

Establishment			
Maneuver	**VORTAC**	**AFIS**	**Analysis**
At least a 5nm segment between 10 & 25 nm, (5 & 25 nm Hybrid mode)	Normal	Radial In or out	Ensure selected radial is within all applicable radial tolerances, and is representative of mean orbital alignment. If feasible, an approach radial at the same altitude as alignment orbit is recommended.

Table 11-2B

Periodic Check			
Maneuver	**VORTAC**	**AFIS**	**Analysis**
Distance and Altitude. From Facility Data Sheet	Normal	Radial In or out as applicable	If alignment is found > 1° than previously established, perform an alignment orbit. If the orbit remains satisfactory, find a new radial that better represents the orbital alignment, and re-establish both the reference radial and alignment orbit. Notify Maintenance when the ARR and orbit are re-established. Notification may be accomplished through Flight Inspection Central Operations if maintenance is not on site and/or abnormal delays occur.

(1) Maneuvering

(a) AFIS method. The aircraft must be coupled to the RNAV on the azimuth and altitude designated on the Facility Data Sheet as the ARR. The radial is evaluated on at least a 5 nm segment between 5 and 25 nm (10 – 25 nm other than hybrid mode). Fly a radial and altitude that will have a minimal impact on air traffic.

Figure 11-3
AFIS Reference Radial Maneuver

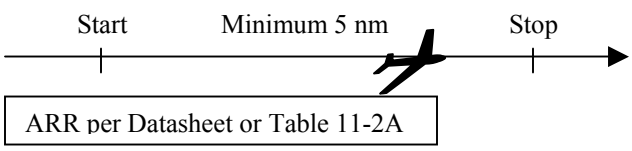

Aircraft Configuration

A/C	Speed KIAS	Flaps	Gear
CL601/ 4	180 -220	UP	UP
Lear 60	180 –220	UP	UP
BE300	180 – 220	UP	UP
HS125	180 –220	UP	UP

(b) Ground Checkpoint method. If non-AFIS techniques are used, the alignment radial should lie over a well-defined ground landmark or use a theodolite bearing. After the landmark/ checkpoint has been selected, measure it to the nearest tenth of a degree. Round to the nearest degree of the measured bearing from the antenna, which overlies this checkpoint. This will establish a radial, which can be selected in the omnibearing selector (OBS). Fly the aircraft along this selected radial (usually at 1500' above the antenna), deviate temporarily to fly directly over the landmark/ checkpoint. Make an event directly over the checkpoint.

(c) Theodolite Method

1 Adjust the theodolite to sight along the bearing, which will coincide with the radial. Fly the aircraft along the radial at 1500' above the antenna. The theodolite operator will advise the pilot when the aircraft is drifting right or left of the selected azimuth.

2 The theodolite operator will actuate the event marker by means of the 1020 Hz tone, or verbal mark when the aircraft is observed on the correct bearing. Determine the value of deflection on the crosspointer and compute the alignment error.

3 **The following alternate method** may be used. Fly the aircraft on-course with reference to the crosspointer, maintaining a constant altitude. The theodolite operator will track the airplane and mark the recording in the aircraft from the theodolite site. The bearing of the aircraft, as determined by the theodolite, must be the actual measured magnetic azimuth. The alignment of the radial can then be computed from the recording.

(2) **Analysis.** When using AFIS, the announced mean alignment is the ARR alignment. When course roughness or scalloping occurs during an alignment evaluation, the graphical average of the deviations must be used. Determine the alignment IAW FAA Order 8200.1. Evaluate DME accuracy (if so equipped) and ID.

(3) **If in FIDME mode** for positioning, determine an altitude that will provide adequate DME positioning updates. Altitudes of 5,000' or higher above the antenna elevation may be required for optimum aircraft position accuracy.

NOTE: An FMS or AFIS computed bearing may be used to navigate. Aircraft using FMS on the RNAV track for the ARR should verify the FMS is using the same magnetic variation value applied to the facility under inspection.

(4) **For locations where DME updating is not available,** use the FI FAC Manual Update function and fly outbound on that radial. Document this procedure on the Facility Data Sheet.

b. **The monitor reference evaluation** establishes the reference value used by ground maintenance to set the minimum amount of azimuth course shift required to activate the ground facility monitor alarm system.

(1) **Maneuvering.** Monitor references may be established either in the air or on the ground. Once established, it must become the reference for all subsequent checks.

(a) **The ground procedure** is the preferred method for monitor evaluations. (Record and document alignment and shift). Document the checkpoint location for inclusion on the AVNIS Data Sheet.

1 **Locate** a position on the ground no closer than 0.5 nm easily accessible [a Ground Checkpoint (GCP) if possible] with steady crosspointer and in-tolerance signal strength. Radio communications with Air Traffic Technical Operations personnel is also required.

2 **Establish** a reference alignment, with the facility in the normal operating condition. Then instruct Maintenance to shift the course to the reference limit, either left or right of course, and evaluate the shift. Have Maintenance shift the course in the opposite direction and again evaluate the shift. Finally, instruct Maintenance to return the facility to the normal condition.

Table 11-3

Run	Maneuver	VORTAC	AFIS	Analysis
1	Ground Position no closer than 0.5 nm (GCP if available)	Normal	RMS recorder running	Establish reference alignment with stable cross pointer and in tolerance signal strength
2	Same as step 1	Shifted to alarm one direction	Same as step 1	Check for alignment shift from reference established in step 1 = or < tolerances in Order 8200.1, Chapter 11.
3	Same as step 1	Shifted to alarm in opposite direction	Same as step 1	Check for alignment shift from reference established in step 1 = or < tolerances in Order 8200.1, Chapter 11.

(b) Airborne Procedure:

1 Establish ARR with the facility in normal condition.

2 Enter a holding pattern on the ARR. Have Maintenance shift the course to the reference limit either left or right of course. Couple to the aircraft to the RNAV azimuth and fly the ARR radial again, evaluate the shift.

3 Have Maintenance shift the course in the opposite direction and again fly the ARR coupled and evaluate the shift.

4 Finally, instruct Maintenance to return the facility to the normal condition, and fly the ARR with the facility back in normal condition.

NOTE: Instantaneous shifts measured on the error trace may be used to establish monitor references, provided roughness and/or bends do not render results different than expected from the above procedure. The normal setting must be checked upon completion of the course shifts.

(2) Analysis. Monitor shifts of more than 1° will be brought to the attention of personnel for determination of whether environmental or equipment related.

(3) Other considerations

(a) There is no requirement in the final normal check that the course returns to the initial normal measurement reading.

(b) Facilities that have dual parallel monitors require a monitor evaluation on one transmitter only. Facilities that have two individual monitors require evaluations on each transmitter.

c. En Route Radials

(1) Maneuvering. Inspect en route radials along the desired procedural azimuth and altitude requested, either inbound or outbound, throughout its intended use (ESV documentation may be required).

(a) Flight Inspection Standard Service Volume (FISSV). Radials flown to determine the FISSV must be flown at a minimum altitude of 1000' (2000' in designated mountainous terrain) above the site elevation or highest terrain or obstruction, to a distance of 40 nm for "L" and "H" class facilities, or 25 nm for "T" class facilities. The 40 mile and 25 mile distances are considered the FISSV coverage distance.

(b) Radials supporting instrument flight procedures must be checked for signal quality and accuracy. Fly Airways, Off-Airway Routes, or routes at or below the minimum requested altitudes. If these radials have procedural use beyond the FISSV distance, they must be inspected to the additional distance at the requested altitudes.

(c) Change-Over Points (COP). The minimum en route altitude (MEA) for an airway COP must be the altitude where usable signals exist from the supporting stations. There is no requirement to check coverage beyond the COP.

d. Intersection Radials/ DME Fixes

(1) Intersections are used to identify azimuth positions in space. These intersections can be used for navigational fixes, reporting points, DME fixes, COP(s), etc. Establish a minimum Reception Altitude (MRA) for each intersection that does not meet the minimum en route IFR altitude (MEA). The MRA is the altitude where reliable signals can be received within the procedural design area.

(2) When Fixes are located within the FISSV, coverage throughout the fix displacement area can be predicted (fix displacement evaluation is not required). Inspect these fixes along the track used to define the fix at the proposed procedural use altitude.

(3) When a fix is located beyond the FISSV of any facility that supports the fix, the appropriate fix displacement coverage evaluation must be accomplished for that facility. Refer to Chapter 22 for flight inspection procedures of ESV(s).

(4) During a periodic evaluation, verify that crossing radials identifying the fixes support the procedure. Verification may be made by analysis of cockpit instrumentation.

(5) Crossing Radials. When a crossing radial is used to define a point in space (i.e., IAF, FAF, etc.), there is no requirement to fly it radially. The evaluation of the crossing radial is accomplished while the aircraft remains on the procedural track.

(a) For a commissioning or reconfiguration evaluation, or new procedure development, the crossing radial must be verified by recording trace analysis for azimuth alignment, course sensitivity or modulation, identification, roughness and scalloping, and signal strength. (Alignment may be determined by manual crosspointer analysis of the crossing radial at the fix.) If the fix is not contained within the FISSV of either facility, an ESV must be established to support the procedure.

(b) For a periodic evaluation, verification may be accomplished by recording trace or analysis of the cockpit instrumentation.

(c) AFIS Crossing Radial Setup: On System plot control page, toggle System C control to Auto On or Manual, toggle NCU Input to System receiver to be used for inspection, toggle system tune to Manual, toggle deviation offset to Manual and Execute page, enter radial to be checked in (OBS) deviation offset, Enter Frequency of system to be checked in ALT FREQ. Scratch pad, execute page.

e. Terminal Radials/ Fixes (Approach, Missed Approach). Evaluate the entire radial segments that comprise the STAR, SID/ DP, or SIAP on commissioning and frequency change inspections. On commissioning and frequency change inspections, the radials must be evaluated to include the holding patterns, procedure turns, approach and missed approach, or departure routings. During periodic, antenna change, and facility rotation inspections, evaluate only the final approach segment of the SIAP (Figure 11-4). Evaluate other terminal radials on a surveillance basis.

(1) Maneuvering: All final approach segments must be flown in the direction of the intended use (with the exception of TACAN Null checks). All evaluations must be conducted at the procedural altitudes, except the final approach segment. This segment is evaluated from the FAF (or final descent point) descending to 100 ft below the lowest MDA to the MAP (Figure 11-4). In addition, descend to 100 feet below all stepdown fix altitudes inside the FAF. An event mark must be made at the MAP and the minimum altitude flown at the MAP annotated on the recording. During site, commissioning, reconfiguration, antenna change, frequency change, and changes to the SIAP, evaluate the ± 5° VOR radials on each side of the final approach radial. Evaluation of these offset radials needs only be done on one transmitter and must be evaluated at the same altitudes and in the same direction as the final approach radial segment.

Figure 11-4
Terminal Radials/ Fixes (Approach, Missed Approach) Maneuver

	Aircraft Configuration		
A/C	**Speed KIAS**	**Flaps**	**Gear**
CL601/ 4	140 – 180	20	DN
Lear 60	160 – 200	20	DN
BE300	140 – 160	Approach	DN
HS125	Vref+25 - 180	15	DN

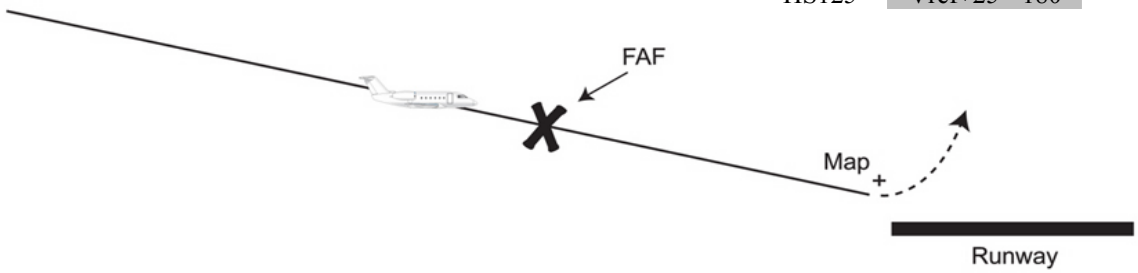

(2) On Commissioning Inspections, missed approach and SID/ DP radials for facilities, which are located within the airfield boundary must be evaluated from overhead the station outbound to the limits depicted for the procedure. If no termination point is depicted, the radial must be checked to where it joins the en route structure or the expected coverage limit of the facility category, i.e. 25 nm for a "T" class and 40 nm for "L" or "H" class facilities.

(3) During Facility Rotation for MAGVAR Changes, evaluate one TACAN null and or VOR offset radial 5° beyond the final approach radial IAW Paragraphs 11.20e(1) and (6). For example, when the published final approach radial is changed from R090 to R087, based on a magnetic variation change from 2° East to 5° East, fly R082 as the null/offset radial. R095 will have been flown previously to support the R090 approach and provides the 5° minimum requirement for the other side. Ensure the published facility restrictions, receiver checkpoints, and ESV radials, changed per the MAGVAR check, are reported on the flight inspection report.

(4) Analysis. Check azimuth alignment, course sensitivity or modulations, polarization (when within 5 to 20 nm of the station) 5° offset radials do not require polarization check), roughness, scalloping, bends, ID, sensing, and signal strength, and other required parameters throughout the maneuvers. Ensure the procedure is compatible with human factors (see FAA Order 8200.1, Chapter 6, Paragraph 6.15c), the navigational guidance is satisfactory, and it delivers the aircraft to the desired "Aiming Point".

(5) Other Considerations. When terminal fixes are located within the facility's FISSV or below the FISSV but within the standard service volume, coverage throughout the fix displacement area can be predicted, and fix displacement evaluation is not required.

(6) TACAN Azimuth Null Checks: On commissioning, antenna change, new procedures inspections, and changes to procedures inspections that result in a FAF altitude change of 300 ft or more the following null checks are required: Approach radial, ± 5° either side of the approach radial.

(a) Maneuvering. May be flown inbound or outbound on a level flight, from 3 nm outside the FAF to 3 nm inside the FAF at the lowest minimum FAF altitude.

(b) Analysis. Nulls defined as any repeatable out-of-tolerance crosspointer action or condition of unlock usually accompanied by rapid changes in the automatic gain control (AGC) and oscilloscope indications of a loss or distortion of the 15 and 135 Hz modulation components are not permitted in this area. If a null is found, measure the vertical angle by flight in the area described above at an altitude 500 ft above or below the minimum FAF altitude (caution and map analysis should be used if 500 ft below FAF altitude is lower than MDA). Inform Air Traffic Technical Operations personnel for evaluation and possible correction. If the null cannot be corrected by antenna change or height adjustment, a new procedure will need to be developed which will avoid the affected area.

(c) Other Considerations. Null checks are required on only one transponder. If the TACAN facility is located at the FAF, the null check is not required due to the effect of station passage.

(d) If the ground facility is emitting false reply pulses, erroneous distance information may be present. This condition usually occurs within 25 nm of the antenna. Whenever actual false lock-ons are experienced, the offending facility must be removed from service until this condition is remedied.

f. Orbital Evaluations are used to determine azimuth error distribution and signal quality. Orbit data is used as reference information. Establish a reference alignment orbit during commissioning, antenna change, facility rotation, if no orbital reference exists, or if ARR and alignment dates on the AVNIS data sheet don't match. Evaluate for deviation from the established reference during all subsequent orbital evaluations.

(1) Alignment Orbit is used to determine the accuracy and optimum error distribution of the azimuth. The objective of the check is to help Facilities Maintenance personnel determine environmental problems close in to the facility. The evaluation is conducted for 360° of azimuth. AFIS and GPS hybrid is the preferred method.

Figure 11-5
Alignment Orbit

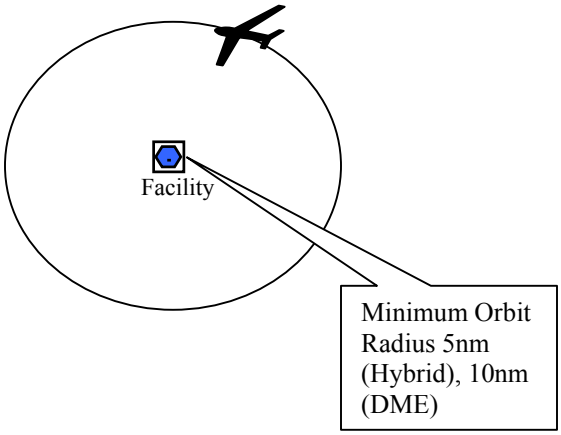

Aircraft Configuration

A/C	Speed KIAS	Flaps	Gear
CL601/4	MAX 250	UP	UP
Lear 60	MAX 250	UP	UP
BE300	MAX 250	UP	UP
HS125	MAX 250	UP	UP

Radius 5-7 nm (MAX GS 190 kts)
Radius 8-10 nm (MAX GS 210 kts)
Radius > 10 nm (MAX GS 250 kts)
(GS is related to TACAN antenna rotation speed)

(a) Maneuvering. When using AFIS an orbit radius of 5 nm and beyond may be flown when using GPS hybrid or equivalent for updating. Use 10 nm and beyond when using DME/ RNAV updating. The orbit may be flown clockwise (CW) or counterclockwise (CCW), but once established, it must be flown in the same direction, at the same distance and altitude, on each subsequent inspection (Figure 11-5).

NOTE: Counter-clockwise orbit is preferred to reduce error that may be generated when checking mechanically rotating TACAN antennas.

Compute a tapeline (TL) altitude to fly the orbit at a standard angle of 4° to 6° from the site.
Alignment Orbit Altitude Calculation:

TL = (TAN Ø)(Dist. Ft)
Earth Curvature (EC) = $(\text{Dist nm})^2$ (0.833)
Alignment Orbit Altitude = TL + EC + Antenna Elevation

The ratio between distance and altitude becomes critical when looking for low angle reflections or shadowing. Altitudes and distances may be modified when conditions prevent establishing them at the recommended 4° to 6° (air traffic requirements, engineering or maintenance support, and site conditions. Indicate deviations from the standard on the flight inspection report.

(b) If alignment cannot be determined orbitally, it may be measured by flying one radial in each quadrant. Determine the radial alignment from at least a 5 nm segment flown within the distance and angular parameters listed in the above paragraph. A partial orbit, augmented with radial alignment, is preferred over alignment determined solely by radial means. The Flight Inspection Policy Team must approve the use of radial flight in lieu of orbital alignment.

(c) One orbit may be flown on dual transmitter facilities during any inspection, except commissioning, by requesting transmitter changes. If sufficient transmitter changes cannot be accommodated (at least one in every 40°), fly an orbit on each transmitter (see transmitter differential tolerances).

(d) Course error distribution must be determined prior to rotation (if required) to achieve optimum station balance. It is not necessary to refly the orbit after this facility rotation, provided the direction and magnitude of the adjustment can be confirmed by radial flight check. Apply the confirmed azimuth shift to the alignment orbit for the final error spread determination and plotting. Complete the remaining facility rotation checklist items after the rotation.

(e) Subsequent Inspections. On periodic inspections, if a change in mean course alignment of more than 1.0° is found, contact Facility Maintenance. Facility maintenance will conduct an evaluation to determine if the change in the facility was caused by a maintenance problem or caused by an environmental change.

(f) Ground Checkpoint Manual Mode Method. Checkpoints charted on sectional are desired every 20° of azimuth; however, acceptable results can be obtained with fewer checkpoints if a precise orbit track is maintained. Whenever possible, checkpoints should be selected that will occur near the crossing of a whole radial. If it is necessary to make major changes in altitude during the orbit, discontinue the orbit at a checkpoint, maneuver in that area while changing altitudes. Cross the last checkpoint at the new altitude and mark the checkpoint on the recording. Minor changes in altitude may be made without interrupting the orbit. Ground checkpoints may be established and used at locations where map or chart accuracy is questionable by verifying accuracy with a theodolite. Easily identifiable and permanent types of ground references should be used for checkpoints. By establishing good ground checkpoints, the necessity for recurring theodolite use for periodic checks can be eliminated. Subsequent flight checks can be made using the appropriate chart marked with ground checkpoints.

(g) Theodolite Method. The orbit radius must be the maximum visual range for the theodolite operator. Advise the theodolite operator of the bearing, vertical angle, altitude, and range of the aircraft from the site when the aircraft is established on the orbit. After sighting the aircraft, the theodolite operator must preset the theodolite to the nearest 5° or 10° increments ahead of the aircraft and, at the preselected reference point on which the aircraft (engine, nose, etc) crosses the vertical crosshair, transmit the 1020 Hz tone or verbal mark to the aircraft (theodolite azimuth should also be transmitted). Rotate the theodolite to the next 5° or 10° azimuth increment and repeat the procedure. Repeat this procedure through complete orbit with an overlap of at least one transition. The combined receiver error and radial displacement at each 10° point where the course line crosses the center of the recording may be measured with 10-point dividers. Use the leading edges of the appropriate mark indication as a standard. Station error, corrected for receiver error, and theodolite offset, may be determined and plotted.

(h) Analysis: During the orbit evaluate azimuth alignment, course sensitivity or modulations, sensing and rotation, roughness and scalloping, identification, and signal strength. Out-of-tolerance conditions found during an orbital inspection must be confirmed by a radial evaluation before restricting a facility or issuing a NOTAM. The radial evaluations normally have priority. When optimizing the alignment, the mean orbital alignment should be within ± 0.5°, and the system differential between a collocated VOR and TACAN should not exceed 1.0°. For dual transmitter systems, use the primary transmitter as the reference.

(2) Coverage Orbit. This check is conducted to determine the facility's ability to support the Flight Inspection Standard Service Volume (FISSV). The FISSV must be established as follows: On "T" class facilities, the FISSV is 25 nm and 1,000 ft (2,000 ft in designated mountainous areas) above antenna elevation and intervening terrain. On "L" and "H" class facilities the distance extends to 40 nm, and the altitudes remain the same as for the "T" class facility. Establish facility restrictions and performance status based on the FISSV (Figure 11-6).

(a) Maneuvering. One complete orbit (one transmitter only) must be flown at an orbit distance of 25 nm for "T" class or 40 nm for "L" and "H" class facilities. Fly at an altitude 1,000 ft (2,000 ft in designated mountainous areas) above antenna elevation or intervening terrain. When in-tolerance signals are not obtained, fly at an altitude where tolerances are met. If these altitudes are higher than the FISSV altitudes, facility restrictions and NOTAM actions are required.

Figure 11-6
Coverage Orbit

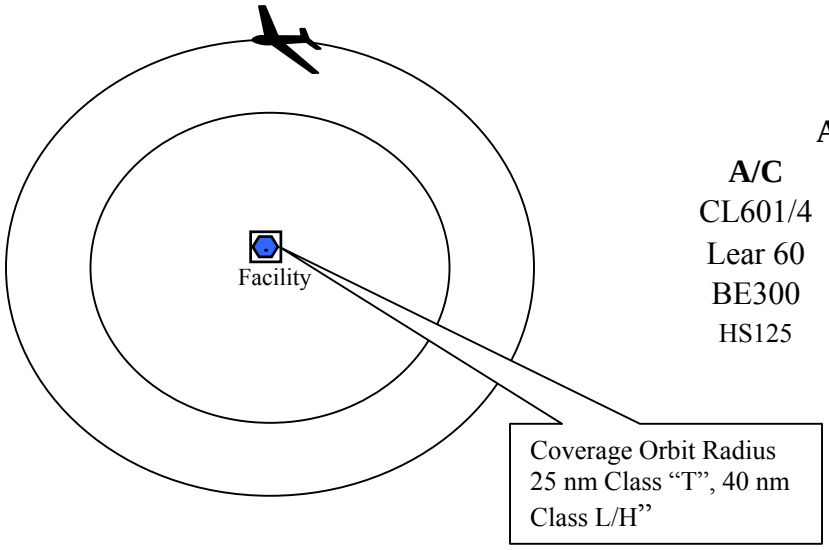

Aircraft Configuration

A/C	Speed KIAS	Flaps	Gear
CL601/4	MAX 250	UP	UP
Lear 60	MAX 250	UP	UP
BE300	MAX 250	UP	UP
HS125	MAX 250	UP	UP

NOTE: For fuel planning, use the formula 2 πR to find the distance around the orbit, i.e, 25 nm orbit (e.g., 2 x 3.1416 x 25 = 157 nm); 40 nm orbit is approximately 250 nm.

(b) Analysis: During the orbit, evaluate azimuth alignment, course sensitivity, modulations, sensing and rotation, roughness and scalloping, identification, and signal strength.

A restriction defines an area of unusable signal. When out-of-tolerance (OT) conditions are found, they will be verified by radial flight. Radials flown through the most severe OT area may be used to define the distance and altitude limits of the entire segment. Restriction lateral limits will be set by radial flight. Radial inspection results normally have priority over orbital inspection data. In areas of multiple restricted segments, it may be appropriate to group those segments into larger, easier to understand restrictions. The advantages of this over-restriction in some areas must be weighed against user requirements. Fly an arc at the FISSV of the facility at the restricted altitude to encompass the restricted area to determine usable signal coverage. Report restrictions in CW direction, including distance and altitude. Restricted areas are generally not smaller than 10°. Example restriction: From 127 - 187, Beyond 12, Below 5,500'.

Procedures flown below or outside the FISSV, which are found unsatisfactory, must be denied, but a facility restriction is not required.

Revalidate ESV(s) anytime a coverage orbit is required by Order 8200.1. If coverage is not required but is accomplished upon special request, ESV(s) are not required to be revalidated unless revalidation is part of the special flight inspection request.

g. Expanded Service Volume (ESV). An ESV is a volume of airspace, outside of a facility Standard Service Volume (SSV), that is approved for operational use by Spectrum Engineering, and where a facility meets the applicable flight inspection requirements. ESV(s) are required only when procedural use is predicated on a NAVAID's performance outside of the SSV as illustrated in Appendix 11. In most applications, the VOR is the primary facility supporting procedural use (i.e., airways, fixes, intersections, etc.). When evaluating facilities supporting procedural use, record all component signals.

(1) ESV Documentation. If any NAVAID component (i.e., VOR, TAC, or DME) does not meet flight inspection parameter tolerances, document the results as follows:

(a) Within the applicable 25 or 40 nm flight inspection service volume, complete the appropriate flight inspection report form(s) and restrict the NAVAID accordingly.

(b) Beyond the applicable FISSV but within the SSV, complete the appropriate flight inspection form(s) and document the flight inspection results on the procedures package forms. No facility restriction is required.

(c) Beyond the applicable SSV, complete the appropriate flight inspection form(s), ESV forms, noting the component(s) which will not support the ESV, and document the results on the procedures package forms. No facility restriction is required.

(d) For flight inspections beyond the applicable 25 or 40 nm distance, complete only the fields of the flight inspection report forms for the NAVAID components identified for procedural use.

(2) Maneuvering. Position the aircraft on radial ESV as appropriate for the check being conducted.

(3) Analysis. Check azimuth alignment, course sensitivity or modulations, roughness, scalloping, bends, ID, sensing, and signal strength, and other required parameters throughout the maneuvers.

(4) Other Considerations. If the bearing is found to be unsatisfactory, evaluate the ESV request to determine if a modified ESV to a shorter distance or higher altitude would be useful and could be approved.

h. Receiver Checkpoints are established to allow pilots to check the accuracy of their receivers. Inability of a facility to support receiver checkpoints must not result in a facility restriction.

(1) Ground Receiver Checkpoints will be established on the airport ramp or taxiways at points selected for easy access by aircraft, but where there will be no obstruction of other airport traffic. They normally will not be established at distances of less than one-half mile from the facility, nor should they be established on non-paved areas.

(a) Maneuvering

1 Commissioning inspection or when a new ground checkpoint is established. Align the aircraft towards the facility, with the aircraft's receiving antenna over the selected checkpoint. Determine the correct facility radial and round off to the nearest whole degree. This radial will be published as the ground receiver checkpoint azimuth.

2 Periodic flight inspections will be evaluated with the aircraft's receiving antenna over the checkpoint. If the results of this check are unsatisfactory, then re-align the aircraft towards the facility with the aircraft's receiving antenna over the checkpoint to minimize aircraft position's error. If this check is also unsatisfactory, remove the checkpoint from service.

(b) Analysis. All azimuth bearings must be stable and within prescribed azimuth tolerances. Check azimuth alignment, course sensitivity or modulations, roughness, scalloping, ID, sensing, and signal strength. If a stable signal and alignment cannot be obtained at a location, select another site or establish an airborne receiver checkpoint, if feasible.

(c) Signage: The ground receiver checkpoint signs and airport surface markings must be in accordance with Figure 11-7 below, prior to publishing new ground checkpoints. Signs and markings must be observed for continued maintenance during subsequent inspections of the NAVAID facility. Slight variations in airport surface markings may be observed which should not affect its acceptability, unless in the judgment of the flight inspector it could affect its usability.

1 **Airport Surface Markings:** The spot selected for the checkpoint must be marked by a painted circle 10 ft in diameter as illustrated below.

Figure 11-7
Airport Surface Markings

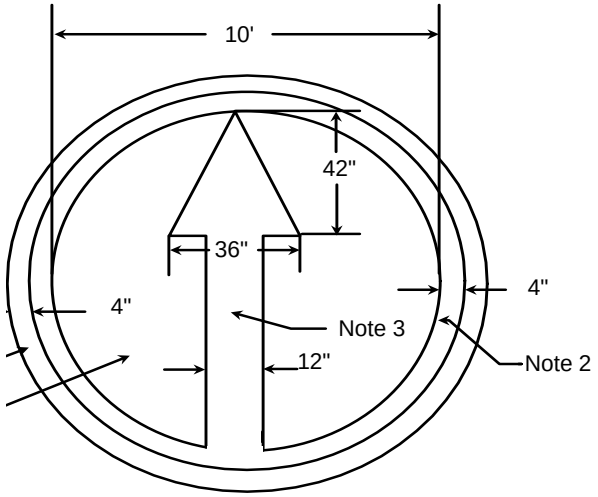

NOTES:

1. White (may be bordered on the inside and outside with 6-inch black band, if necessary, for contrast)
2. Yellow (Chrome yellow-taxiway aviation yellow).
3. Yellow arrow to be aligned toward facility and extended the full width of the inner edge of the circle.
4. Interior of circle black (concrete surfaces only**)**

2 **Receiver Check Point Signs** must show the facility identification, channel, course selected (published) for the check, and the plotted distance from the antenna.

Figure 11-8
Receiver Checkpoint Signs

DCA VTAC **116.3 (CH 110) 147/ 327** **DME 1.5 nm**

NOTE: The signs must be distinct, easy to read, and must not constitute a hazard to aircraft movement.

NOTE: For VORTAC(s) if either portion of the facility does not support the checkpoint, annotate the Facility Data Sheet and notify Airfield Management to remove that portion from the sign.

NOTE: Slight variances in airport surface markings and signage may be observed; however, that should not affect their acceptability unless, in the judgment of the flight inspector, they could affect the usability of the checkpoint.

(2) Airborne Receiver Checkpoints must be designated over prominent ground checkpoints (landmarks) at specific altitudes. It is preferred that such checkpoints be near an airport so they are easily accessible to users. However, consider selecting an area and altitude which will not interfere with normal traffic patterns.

(a) Maneuvering. The altitude specified for receiver checkpoints must be at least 1,000 ft AGL. The checkpoint should not be established at a distance less than 5 nm or more than 30 nm from the facility. Fly the aircraft directly over the selected checkpoint either toward or away from the facility and annotate on the recordings the whole DME reading prior to the checkpoint, the checkpoint, and the whole DME reading after the checkpoint. At a minimum, establish the aircraft on the radial 1 mile prior to the checkpoint.

(b) Analysis. Compare the electronic radial recorded with the plotted geographic azimuth. The electronic radial overlying the geographic checkpoint, rounded off to the nearest whole degree, will be the azimuth published as the receiver checkpoint. Compare the plotted distance (derived from map study) from the checkpoint to the facility antenna and the actual distance received when directly over the checkpoint. The electronic radial overlying the geographic checkpoint, rounded off to the nearest whole degree, will be the azimuth published as the receiver checkpoint.

i. Standby Transmitters. Both transmitters must be evaluated for each required checklist item except the coverage orbit and ESV(s), which are required on one transmitter only. Alignment evaluations may be made by changing transmitters during an evaluation and comparing the azimuth course shift. Transmitter changes must not be made inside the final approach fix, however transmitter changes made before the final approach fix are satisfactory for evaluation purposes. If comparison results are questionable, fly the final approach segment on each transmitter.

j. Standby Power. With the facility operating on standby power, check course alignment (one radial), course roughness and scalloping, identification, and distance accuracy.

(1) Maneuvering: Inspections are to be performed when flying a radial with the facility operating on normal power and then repeating the check over the same ground track at the same altitude with the facility operating on standby power.

(2) Analysis. Check azimuth alignment, course sensitivity or modulations, roughness, scalloping, bends, ID, sensing, and signal strength.

> **NOTE:** If a TACAN facility has a high power 3-phase antenna and the electrical phases of the generator are reversed, the TACAN antenna will spin backwards and cause rotation problems.

(3) Other considerations: Standby power checks are not required for facilities powered by Floating Batteries (Uninterruptible power supplies (UPS), etc.) that are constantly charged by another power source. The Facility Data Sheet should indicate the source of standby power.

k. Associated Facilities are inspected concurrently with the inspection of the primary facility. These include marker beacons, lighting aids, communications, etc. which support the en route/ approach procedures and landing weather minimums of an associated approach procedure. Conduct inspections of these facilities in conformance with the detailed procedures and tolerances contained in the applicable section of Order 8200.1.

11.21 ANALYSIS. This section details the parameters to be inspected. Chapter 11 graphics display basic Flight Inspection maneuvers and general aircraft configuration.

a. Sensing and Rotation checks are required at the beginning of each flight inspection.

(1) Sensing is checked by positioning the aircraft on a known radial. Select the azimuth of the radial to be flown. The OBS indicator will point towards the facility. For AFIS-equipped aircraft compare the computer-generated bearing with that being received. Sensing should be checked prior to rotation since incorrect sensing may cause station rotation to appear reversed.

(2) Rotation is checked after completion of sensing check by flying a partial orbit and checking to ensure that the radial bearings continually decrease for a counterclockwise orbit or continually increase for a clockwise orbit.

Figure 11-9
VOR Sensing and Rotation

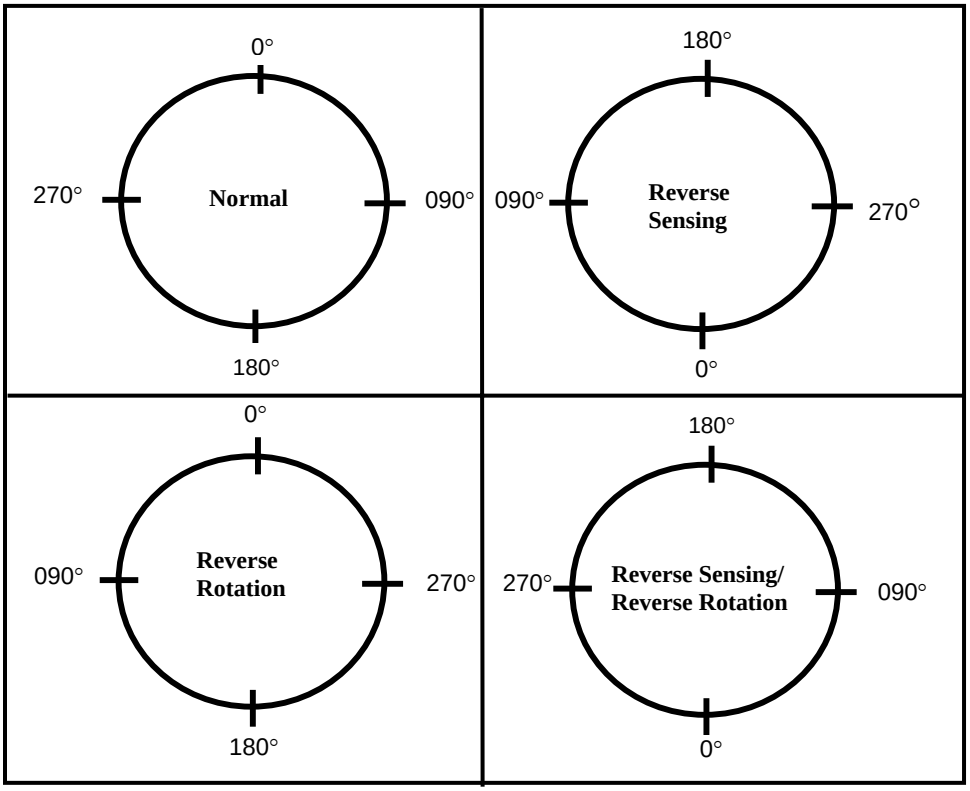

Figure 11-10
TACAN Sensing and Rotation

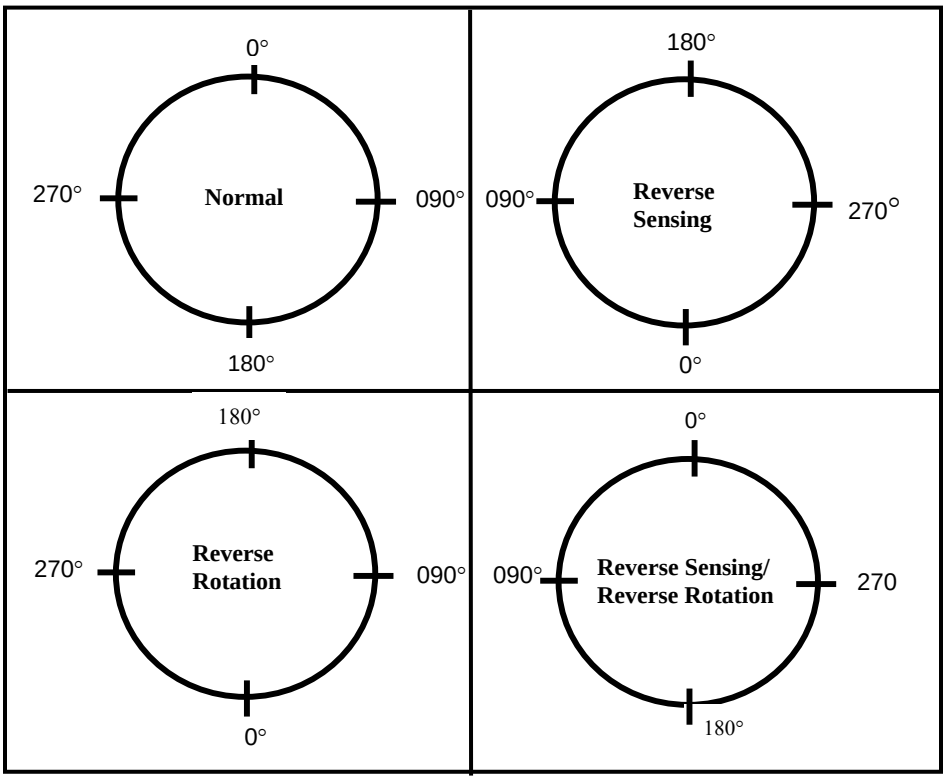

b. Modulation Levels. Modulation levels are monitored during all phases of the inspection; any out of tolerance conditions are recorded and reported. Adjustments of modulation levels may be made on any radial (within 10 to 25 nm of the facility). Determine the average modulation levels or the graphical average of the recorded modulation levels (when available) when fluctuations are encountered.

(1) VOR Modulations levels are 30 Hz AM, 30 Hz FM (9960 Hz subcarrier FM deviation), and 9960 Hz AM of RF carrier. Modulation levels must meet operational tolerances throughout the unrestricted service volume of a VOR.

(a) 30 Hz AM is optimized at 30% and is termed “variable phase on conventional VOR(s), and “reference phase” on Doppler VOR(s). 30 Hz AM is set by the power ratio between the separately radiated carrier and sideband signals.

(b) 30 Hz FM is optimized at 30% (a deviation ratio of 16 is equivalent to 30% modulation) and is termed “reference phase” on conventional VOR(s) and “variable phase” on Doppler VOR(s).

(c) 9960 HZ AM is optimized at 30%. The 9960 Hz AM of the RF carrier may cause receiver flag warnings when out of tolerance.

(2) TACAN Modulation Levels 15 Hz, and 135 Hz, Main Reference Group (MRG), Auxiliary Reference Group (ARG), ID. AFIS shall be used for analysis of TACAN signals. The following are analytical procedures and no facility restrictions are to be applied if adjustments cannot be made or if maintenance personnel are not available for adjustment. The composite video on the oscilloscope will yield considerable data about the TACAN facility. Measurements should fall within the following limits:

Table 11-4
TACAN Modulation Levels

Parameters	Limit	Remarks
15Hz Modulation	10 – 30%	Inform Maintenance if graphical average exceeds limits
135Hz Modulation	10 – 30%	Inform Maintenance if graphical average exceeds limits
Identification Pulse Spacing	740 microseconds	Synchronized with ARG
Reflections	N/A	No degradation of facility performance
MRG size	12 +/- 1 pulse pair	
ARG size	6 +/- 1 pulse pair	
ARG count	8 +/- 0 bursts	

15 and 135Hz Modulation levels are taken from AFIS. The oscilloscope may be used to verify modulation levels (measure the modulation of each component and calculate the percentage per Section 302.3). Notify maintenance if modulation limits are exceeded. For manual computation of TACAN modulation, see formula below.

Modulation Percentage 135 and 15 Hz

$$\text{15 Hz modulation} = \frac{(V_1 + V_2) - (V_3 + V_4)}{(V_1 + V_2) + (V_3 + V_4)}$$

$$\text{135 Hz modulation} = \frac{(V_1 + V_3) - (V_2 - V_4)}{(V_1 + V_2) + (V_3 + V_4)}$$

Where:

V_1 = Max of 135 Hz and 15 Hz
V_2 = Min of 135 Hz at max of 15 Hz
V_3 = Max of 135 Hz and 15 Hz at min 15 Hz
V_4 = Min 135 and 15 Hz at min 15 Hz

(a) TACAN Components are to be monitored during inspection using the oscilloscope. Advise Maintenance of any discrepancies found.

1 Identification Train. To measure the ID spacing group, adjust the oscilloscope so the MRG is on the left edge of the graticule. Adjust the Time/ Division as needed to measure 740 microseconds between ID pulse Pairs.

2 MRG Size refers to the number of pulse pairs in the MRG. For X channel, there should be 12 pulse pairs with a 30-microsecond spacing between pairs and a 12-microsecond spacing between pulses in a pair. For Y channel, there are 13 single pulses spaced 30 microseconds apart. AFIS and oscilloscope is used to identify and measure pulse number and spacing.

3 ARG Size refers to the number of pulse pairs in the ARG. For X channel, there should be 6 pulse pairs with a 24-microsecond spacing between pairs and a 12-microsecond spacing between pulses in a pair. For Y channel, there are 13 single pulses spaced 15 microseconds apart. The oscilloscope is used to identify and measure pulse number and spacing.

4 ARG count refers to the number of ARG(s) between MRG(s). There are eight ARG(s) between each MRG. Oscilloscope will be used to identify the correct number of ARG(s).

5 Reflections. Reflected signals may be detected by examining the composite video. Reflections when present may duplicate the normal pattern in an image pattern displaced slightly to the right. Reflections may be of sufficient amplitude to cause the pattern amplitude to oscillate at a sine wave frequency dependent on velocity and position of the aircraft.

c. ID. The Morse coded ID signals must be identifiable throughout the entire unrestricted VOR coverage area and ESV. Evaluate ID for correctness, clarity, and to ensure there is no adverse effect on the azimuth course structure. When it is difficult to determine what effect the ID has on the azimuth course structure due to roughness and scalloping, evaluate the same azimuth radial with the ID off and compare the results. When simultaneous voice and Morse coded ID are installed, the modulation levels should sound the same. These levels are approximately 30 and 8 percent respectively. When a voice broadcast feature is installed (ATIS, AWOS, etc), the voice ID feature is suppressed during voice transmissions, but the Morse coded ID should still be heard. When ID is unacceptable, take appropriate NOTAM action and notify Facility Maintenance.

> **NOTE:** Facilities with standby transmitters and separate standby ID equipment use the Morse code ID to identify each transmitter. The Number One Transmitter has equal spacing between all characters of the coded ID. The spacing between the second and third characters of the Number Two Transmitter is increased by one dot.

d. Signal Strength. VOR/ VOT signal strength must be evaluated during all flight inspection evaluations, and the received signal must be equal to or greater than the specified tolerance.

e. Alignment. The alignment of omni-directional type facilities must be computed through algebraic addition. The azimuth reference (AFIS, theodolite, map) must always be assigned a Positive (+) value, and the azimuth determined by the ground facility must always be assigned a Negative (-) value. Thus with a received VOR radial value of 090.5 and an AFIS/ theodolite/ map position of 090.0, the facility error would be -0.5°. Alignment errors may also be referred to as clockwise (positive) and counterclockwise (negative)

f. Roughness and Scalloping. Roughness will show as a series of ragged irregular deviations; scalloping as a series of smooth rhythmic deviations. The frequency of each is of a duration that is not flyable and must be "averaged out" to obtain a course.

(1) To measure the amplitude of roughness and scalloping, or the combination of the two, draw two lines on the recording that are tangential to and along each positive and negative peak of the raw crosspointer or error trace. The number of degrees or microamperes between these lines will be the total magnitude of course deviations; one-half of this magnitude will be the plus and minus deviations.

(2) A third line is drawn equidistant from these two lines to obtain the average "on course" from which course alignment is measured. Thus, the instantaneous alignment error of the course may be computed from the coarse recordings at any point where an accurate checkpoint has been marked on the recording. Alignment error will be referred to in degrees to the nearest tenth. Misalignment in a clockwise direction is considered positive. Where the magnetic azimuth of the measured (ground) checkpoint is greater than the electronic radial, the error is positive.

g. A bend is similar to scalloping, except its frequency is of a duration that enables an aircraft to be maneuvered throughout the aberration to obtain a centered crosspointer. Accordingly, a bend might be described as a brief misalignment of the course. Bends are sometimes difficult to discern, especially in those areas where good ground checkpoints or other means of aircraft positioning are not available. For this reason, it is important to the analysis of a bend to consider aircraft heading and radial alignment deviations. A smooth deviation of the course over a distance of 2 miles would manifest itself as a bend for a flight inspection aircraft at a ground speed of 150 knots. An aircraft of greater speed would not detect such smooth deviations of the course as a bend unless it was over a greater distance. In the analysis of bends, further consideration should be given to the flight levels and speeds of potential users. Since speed, altitude, system response, and other factors are important in the analysis of course structure, the flight inspector should carefully evaluate the flyability factor before assigning a final facility classification.

Figure 11-11A

BENDS

(Example – not drawn to scale)

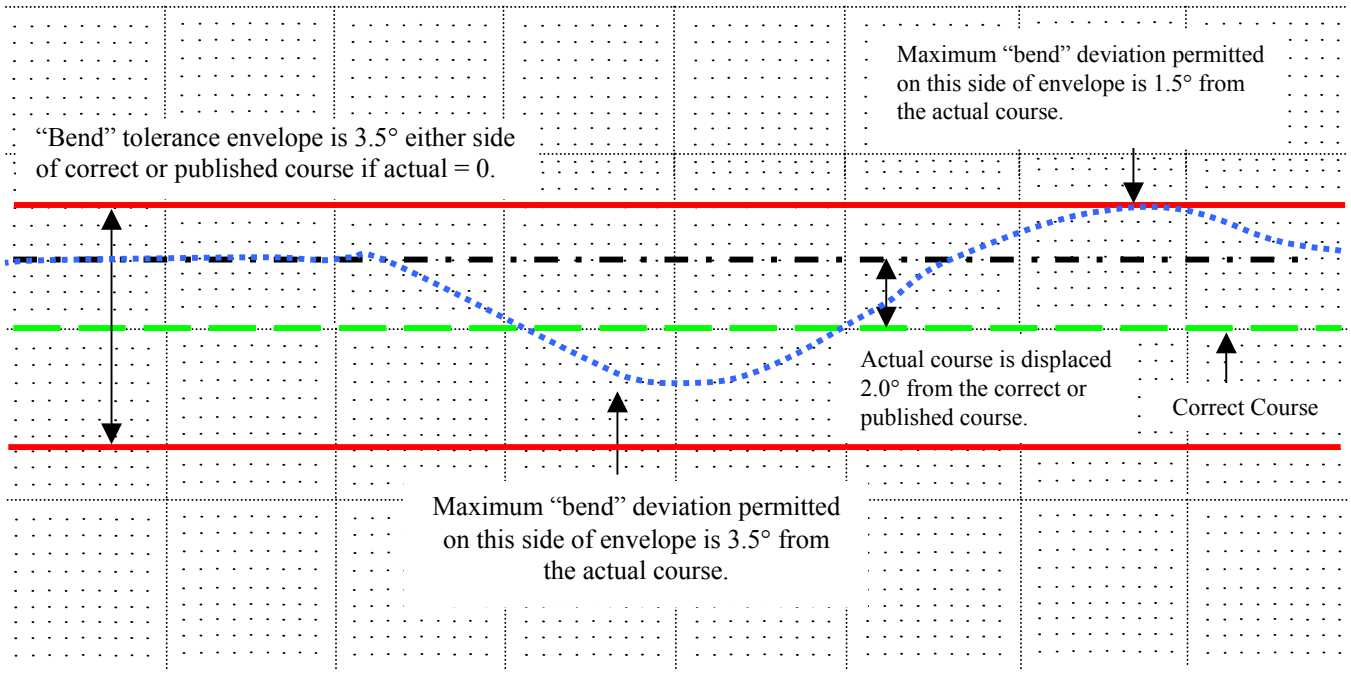

Figure 11-11B

STRUCTURE

(Example – not drawn to scale)

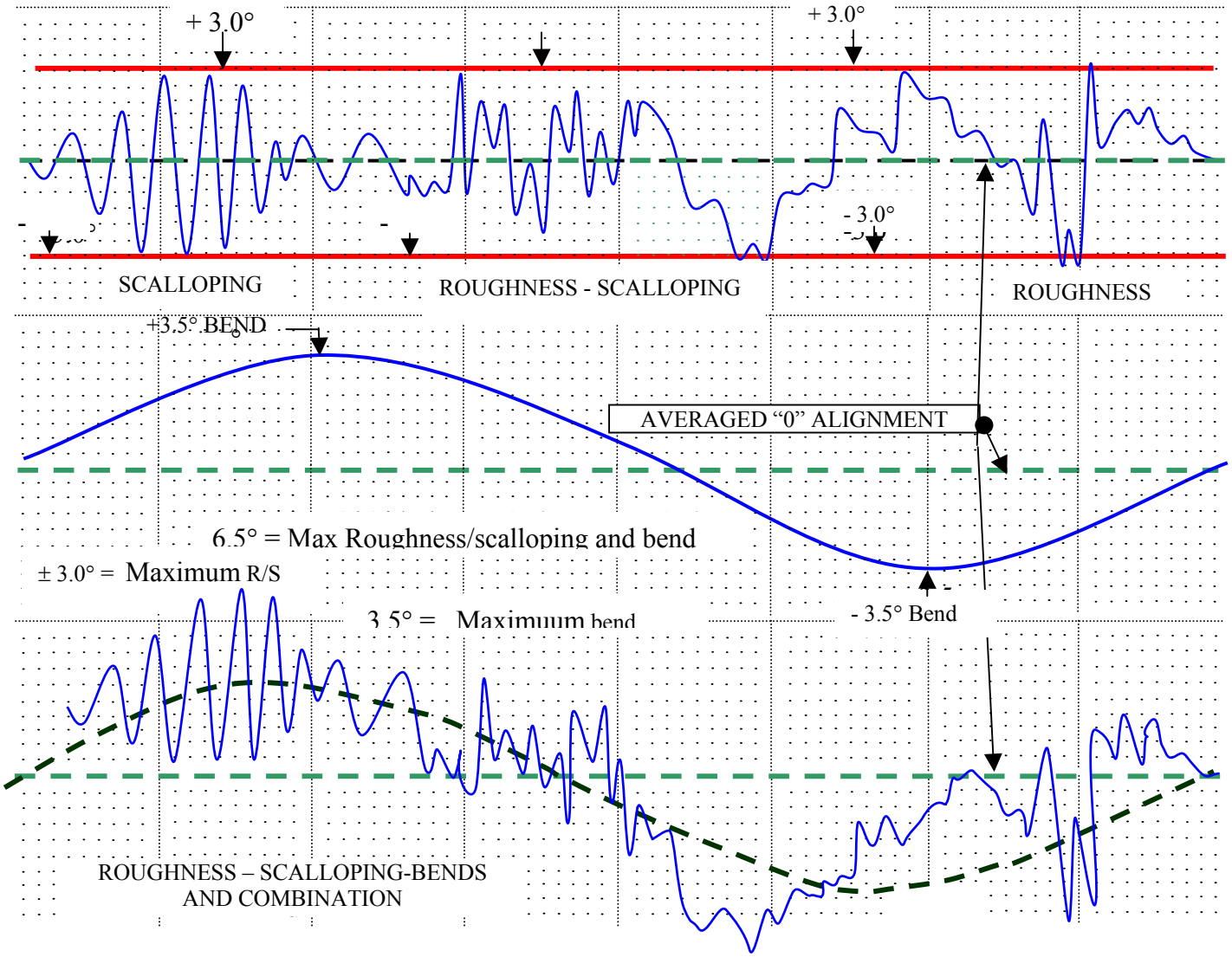

h. Polarization causes azimuth course variations whenever the aircraft is banked around its longitudinal axis. It is caused by the radiation of a vertically polarized signal from the VOR antennas (horizontally polarized signal from a TACAN) or other reflective surfaces around the site.

(1) Maneuvering. Polarization is evaluated in radial flight. On a VOR, the check should be made any time a radial work is accomplished. On a TACAN, polarization is required to be checked on only one radial. Polarization checks will be conducted (inbound or outbound) within 5 to 20 nm of the facility. ARR may be used but check must not be made while recording alignment segment.

(a) The preferred method of evaluating polarization is to bank the aircraft 30° around the longitudinal axis (starting on either side), then banking 30° in the opposite direction, and returning to straight and level flight. During aircraft banking, particular attention should be paid to keeping tracking and heading changes to a minimum to ensure course errors due to aircraft positioning are not mistaken for polarization effects. The course deviations that occur during the 30° rolls may indicate polarization. A conformation check is required if out-of-tolerance conditions are discovered using this method.

(b) Confirmation procedure. Fly over a prominent ground checkpoint, located 5 – 20 nm from the facility. Execute a 30°-bank and turn, hold this attitude throughout 360°, and end this maneuver as close as possible to the same ground checkpoint as possible. Mark the recording at the beginning and end of each 90° change in azimuth heading. If polarization is not present, the course will indicate a smooth departure from and return to the "on-course" position, deviating only by the amount that the aircraft is displaced from the original azimuth.

(2) Analysis. The indications are similar to course roughness and scalloping but normally can be separated by relating the course deviations to the aircraft banking. When roughness and scalloping cannot be separated from polarization, select another radial. The evaluation should be conducted on another nearby radial in the same azimuth quadrant.

i. Voice. The voice broadcast feature, when installed, allows a user to receive live radio communications from FSS, weather and altimeter information, air traffic and airport advisories, etc., on the VOR frequency. Voice amplitude modulates the RF carrier by 30 percent. Advisory services that provide voice broadcast features include Automatic Terminal Information Service (ATIS), Automatic Weather Observation System (AWOS), Automated Surface Aviation Observing System (ASOS), Transcribed Weather Broadcast Equipment (TWEB), and Hazardous Inflight Weather Advisory Service (HIWAS). Some services may not be continuously available. Inspect only those services available.

(1) Maneuvering. Aircraft should be in level flight, tracking any convenient radial for making FSS voice check . ARR may be used but check should not be made while recording alignment segment.

(2) Analysis of Voice. Inspect the voice for clarity and to ensure there is no adverse effect on the azimuth course. Ensure that all published remote sites can respond on the VOR frequency when contacted.

FSS-Associated VOR: Request a test count from FSS Radio while recording any convenient radial watching for adverse effect to radial structure or alignment.

Continuous Voice Broadcasts: Make periodic checks of the quality and coverage of the voice transmissions while operating in the VOR coverage area.

SECTION 3. DISTANCE MEASURING EQUIPMENT (DME)

11.30 INTRODUCTION. This section provides instructions and performance criteria for certifying standard distance measuring equipment (DME).

The flight inspection of DME can be performed separately but is normally checked in conjunction with the more detailed check of the associated ILS, MLS, VOR, or TACAN facility. When conducting a flight inspection of DME, check the following:

- Accuracy
- Identification
- Coverage

11.31 DISTANCE ACCURACY

a. Maneuvering. Check the accuracy of the TACAN/ DME distance information during inspection of the radials, orbits, approach procedures, and DME fixes.

b. Analysis. AFIS DME error trace evaluation is the preferred method of analysis. (AFIS automatically converts Slant range, no further computations are required). The following is an alternate method of TACAN/ DME distance information. The mileage indication displayed on the distance indicators may be noted on the recordings. Comparison of the scaled distance on the chart (converted to slant range) to the distance indicated by the TACAN/ DME distance indicator at various points may be made for accuracy determination.

c. Other Considerations. It is not necessary to compute the slant range for distances measured at altitudes below a vertical angle of 5° because the relative difference between slant and chart range is negligible (less than ½ to 1 percent). For ease of computation, a 5° angle is equivalent to approximately 1,000ft above antenna elevation at 2 nm, and 5,000ft above the antenna elevation at 10 nm. Above a 5° angle, a DME slant range mileage must be converted to chart distance. See formulas below.

(1) Slant Range to Chart Distance

$$S = \frac{D}{\cos \angle}$$

Where:

D = Geodetic distance (ft)
S = Slant range distance (ft)
$\angle$ = Slant Angle (degrees)

(2) Chart Distance to Slant Range

$$D = S \cos \angle$$

Where:

D = Geodetic distance (ft)
S = Slant range distance (ft)

(3) Slant Angle

$$\angle = \text{arc tan } \frac{A}{D}$$

Where:

A = Altitude above the horizontal (ft)
D = Geodetic distance (ft)
$\angle$ = Slant Angle (degrees)
$\angle$ = Slant angle (degrees)

d. Erroneous Distance Information. If the ground facility is emitting false reply pulses, erroneous distance information may be present. This condition usually occurs within 25 miles of the antenna. Whenever actual false lock-ons are experienced, the offending facility must be removed from service until this condition is remedied.

11.32 IDENTIFICATION. The identification must be checked for correctness and clarity, with the aircraft either in orbital or radial flight. A DME with an associated facility will be checked for correct synchronization of the two identification signals.

11.33 DME COVERAGE must be recorded or annotated and evaluated to the same coverage requirements as the primary system (ILS/ VOR/ NDB, etc.) it supports. DME fixes must be evaluated for coverage ± 4 nm or 4.5° (whichever is greater) at 5 nm greater than the fix distance. Coverage is validated on one transponder only.

> **NOTE:** Cardion (Air Force FRN-45) TACAN(s) require DME to be checked on both monitor "A" and monitor "B" during commissioning or reconfiguration type checks. Monitor "B" can only be checked by having maintenance turn off monitor "A".

SECTION 4. SHIPBOARD TACAN

11.40 INTRODUCTION. The following guidance will be used when an inspection of a shipboard TACAN is accomplished.

11.41 DETAILED PROCEDURES

a. The flight inspection must be scheduled upon receipt of the following information:

(1) Date and time of requested inspection.

(2) Name and hull number of the ship.

(3) TACAN channel.

(4) UHF primary and secondary communication frequency.

(5) Location of ships (latitude and longitude).

(6) Name and phone number of area coordinator.

b. Conduct the inspection with the ship underway and at a distance from shore that is sufficient to preclude interference or shielding of the signal by land mass during radial and orbital inspections.

c. The ship's radar must be used as a basis to determine alignment. Fire control radar is considered the most accurate and will be used when available. Search (CIC) radar may be used if fire control radar is not available. Fire control information is given as TRUE bearings, and search radar is MAGNETIC.

d. Due to various antenna mount positions on ships and possible shielding by other antennas, masts, etc., nulls and/or unusable sectors may occur. Suspected out-of-tolerance conditions must be confirmed by a second evaluation of the area in question. Any sector of the TACAN that does not provide azimuth or distance information must be reported immediately to the ship and documented in the flight inspection report.

11.42 CHECKLIST. The following must be inspected during shipboard inspections.

a. Identification

b. Sensing and rotation

c. Polarization

d. Radial alignment (minimum of one)

e. Coverage

f. Distance accuracy

g. Frequency interference

h. Alignment orbit

i. Approach radial

j. Standby equipment

k. Stabilization

l. Complete the checks in accordance with appropriate paragraphs of FAA Order 8200.1, Chapter 11, unless modified or changed by the following:

(1) Those items normally inspected during radial flight may be accomplished on a radial to or from the ship or during inspection of the approach radial.

(2) Identification. Shipboard TACAN identification consists of two Morse code letters transmitted every 30 or 37 ½ seconds.

(3) Coverage. Check a minimum of one radial for coverage to 40 nm during inbound or outbound flight at 700 MSL. Advise the ship if coverage is less than 40 nm.

(4) Frequency Interference. All of the ship's electronic equipment that is normally operating should be activated during the inspection.

(5) Alignment Orbit. The orbit must be flown beyond 7 nm from the ships and no lower than 700 ft MSL. On those ships using search radar (CIC) for alignment, the orbit must be flown below 2,000 ft MSL.

(6) Approach Radial. The ship's approach radial is the radial that will guide the aircraft to the stern of the ship and will vary depending on the heading of the ship. Fly the radial from a minimum of 7 nm and 700 ft MSL to pass over the ship at 300 ft MSL. Determine and report radial alignment and structure.

(7) Standby Equipment. CV, LPH, LHA, and LPD ships have dual TACAN equipment. Spot check the standby equipment during radial flight by requesting a change from primary to standby equipment.

(8) Equipment Stability. Stability of the TACAN equipment may be affected during a turn of the ship. Stability will be checked during radial inspections by requesting the ship to turn left 15° and then right 15°. Advise the ship's personnel of any change to azimuth or alignment during the turns.

SECTION 5. VOR TEST FACILITY (VOT)

11.50 INTRODUCTION. A VOT is a facility transmitting a test signal that is used to determine the operational status of an aircraft VOR receiver. This section describes the procedure used to inspect and certify a VOT.

11.51 GENERAL. VOT(s)/ VOR(s) operate in the VHF frequency range from 108 – 118 MHz. They share this frequency range with ILS Localizers, with the Localizers operating on the odd (100 KHz) frequencies and the VOT/ VOR operating on the even ones. (Example Localizer 108.1, 108.15 stopping at 111.95, VOT/VOR 108.2, 108.25 to117.95.)

11.52 CLASSIFICATION. There are two different classifications for VOT systems, "Standard" and "Area".

Table 11-5
VOT Classification

CLASS DESIGNATOR	USAGE AREA
Standard	It should be checked on the ground at airport(s) in the area of intended use. Line of sight with transmitting antenna.
Area	Designed for use on the ground or in the air. It may be located to provide the test signal to one or more airports.

NOTE: At this time, VOT(s) do not have a specified service volume. VOT service is identified and controlled by the FAA regional office having jurisdiction of the airport where VOT service may be provided.

11.53 DOCUMENTATION. All PIC, SIC, and Technician event or update marks must be labeled. At a minimum, the Mission Specialist should print out:

a. Self-Test page showing all required parameters passed. (first mission of the day).

b. Miscellaneous service page showing date, aircrew members, aircraft number, self-test facility, and type of inspection.

c. Facility Data Page showing facility under test

d. Plot Control page showing plot lines and calibration. The minimum traces required for checks are: Cross pointer, Modulation (flag alarm current), Signal Strength (AGC), and ID.

NOTE: The VORTAC "Plot Control Page" allows the Mission Specialist to toggle and position traces as required for the inspection or user preference.

e. Record VOT signals RAW analog for all VOT inspections.

11.54 PREFLIGHT REQUIREMENTS. Area VOT(s) are strategically installed to serve specific airports on the ground. The appropriate regional office governing airborne VOT service may identify additional airports. The inspector must check all airports identified to receive ground and/or airborne service. If, as a result of the inspection, adequate VOT coverage is found at additional airports, the FAA Regional Office must be notified. If the Regional Office concurs that the additional airports should receive VOT service, then the inspector must include the additional airports on his report for publication.

11.55 FACILITIES MAINTENANCE PERSONNEL. Prepare for flight inspection IAW Order VN200 8240.52 Chapter 2.

11.56 FLIGHT INSPECTION PERSONNEL. Prepare for flight inspection IAW Order VN200 8240.52, Chapter 2.

11.57 FLIGHT INSPECTION PROCEDURES:

a. Sensing. This check determines and/or establishes the correct ambiguity of the transmitted signal.

Approved Procedure. While on the ground or in the air, check that the ambiguity indicates TO with 180° set in the omnibearing selector (OBS) and FROM with 360° (000° for the AFIS NXT system) set in the OBS, throughout the areas of intended use.

b. Modulation Levels. Since minor variations of the 30 Hz AM, 30 Hz FM (9960 Hz subcarrier FM deviation), and 9960 Hz AM of RF carrier will affect flight data, modulation levels must meet operational tolerances throughout all areas of intended use.

(1) Maneuvering:

(a) Ground. Establish nominal values at the VOT reference point. Ensure that modulations remain within tolerance throughout all use areas.

(b) Airborne. Ensure that modulations remain in tolerance throughout all areas while conducting coverage maneuvers.

(2) Adjustments of modulation levels may be made any where within the area of intended use. Determine the average modulation levels or the graphical average of the recorded modulation levels (when available) when fluctuations are encountered**.**

(3) Other Considerations: Modulation Levels may be affected by interfering outside sources and may be easily found while listening to the VOR. If interference is suspected, use the spectrum analyzer test equipment to verify.

c. Identification. The purpose of this check is to assure that the correct tone and identification are transmitted. Two means of identification are used with these facilities, either a continuous series of dots, or a series of dots that cannot be interpreted as Morse code. Facilities Maintenance personnel should be consulted for the proper identification. Record the commissioned identification on the Facility Data Sheet.

Approved Procedure. For both standard and area VOT(s), check the identification for correctness, clarity, and possible effects on the course indications throughout the areas of intended use (both in the air and on the ground).

d. Frequency Interference. The electromagnetic spectrum from 108 to 118 MHz is reserved for VOT (VOR) and ILS localizer signals. Undesirable RF signals can be radiated in this frequency band that interfere with the VOT signals.

(1) Maneuvering. Position the aircraft as appropriate for the check being conducted.

(2) Analysis. Electromagnetic Interference (EMI) signals can be produced by electrical manufacturing processes, power generating facilities, and may be sporadic. Radio Frequency interferences (RFI) may be caused by other VOR(s), harmonics of other frequencies, commercial FM broadcast stations, etc., which are usually continuous. If interference is suspected, evaluate the electromagnetic spectrum using a spectrum analyzer. Record the measured frequency and detailed information on observed interference.

NOTE: When interference is observed, it is not necessary to restrict the facility, unless flight inspection tolerances are exceeded. Interference must be reported to Facilities Maintenance.

e. VOT Reference Point. This check provides a designated area to begin an inspection or verify facility performance. The reference point must be documented on the Facility Data Sheet.

(1) Maneuvering:

(a) Standard VOT. This check should be performed on the ground. Position the aircraft in an area of normal use for the VOT. It is recommended that the area chosen be the furthest distance from the facility, maintaining line of site. When ground measurements are not practical, use the procedures outlined in Paragraph (c) below to establish the reference point.

(b) For ground-use standard VOT(s) at airports not accessible to flight inspection aircraft, the reference point may be evaluated using a Portable ILS/ VOR Receiver (PIR). The Aviation System Standards Flight Inspection Policy Team must approve the use of these procedures on a case-by-case basis**.** This alternative is subject to the following conditions:

1 Wilcox Model 7010 PIR or equivalent, capable of displaying VOR bearing and modulations, must be used.

2 Calibration of the PIR must be current.

3 A certified flight inspector must accompany the maintenance technician to the VOT location. That person must record the detected course deviation, modulation levels, and signal strength from the PIR display.

4 A certified VOT maintenance technician must operate the PIR and verify the detected PIR information from Step (c) above.

NOTE: The "30 Hz" PIR readout is a measurement of 30 Hz AM modulation. Apply the 25 – 35% VOT modulation tolerance to the 30 Hz and 9960 PIR readouts. The PIR's "FM" output is an FM deviation ratio subject to a 14.8 – 17.2 modulation tolerance.

5 NOTAM procedures IAW Chapter 5, Section 1 of Order 8200.1 apply. The Pilot In Command (PIC) must initiate the NOTAM process, if required, and sign the flight inspection report. In the event a Mission Specialist is deployed without a PIC, the Flight Inspection Office Manager, or a designated PIC, must initiate any NOTAM process and sign the report.

(c) Area VOT. This check may be performed on the ground or in the air. Position the aircraft over a known geographical point at the furthest point of intended use from the facility, while maintaining line of site.

(2) Analysis. Ensure signal quality and alignment are satisfactory IAW Order 8200.1.

f. Alignment. This check is performed to establish and/or verify the accuracy of the transmitted VOT courses throughout the coverage areas.

(1) Maneuvering:

(a) Commissioning. Establish the VOT course alignment at its optimum value (zero degree course error) at the VOT reference point.

(b) Periodic. Inspect the alignment of the VOT anywhere within the approved use areas. If the station alignment exceeds the tolerances specified in Order 8200.1 (VOT Section), recheck and reestablish the alignment (and monitors if necessary).

(2) Analysis:

(a) Commissioning. Ensure signal quality and alignment are satisfactory IAW Order 8200.1

(b) Periodic. If the station alignment exceeds the tolerances specified in Order 8200.1, recheck and reestablish the alignment (and monitors if necessary).

g. Coverage. The purpose of this check is to ensure that adequate signal is received in all areas of intended use.

(1) Maneuvering:

(a) Standard VOT. Coverage is evaluated during a commissioning inspection, concurrent with establishing the standard VOT Reference Point. For periodic inspections, evaluate coverage anywhere within the approved area of use.

(b) Area VOT. Identify all the airports that the area VOT is to serve. Evaluate VOT performance at these airports in the air and/or ground, depending on intent of use.

1 Ground coverage is evaluated during a commissioning inspection, concurrent with establishing the area VOT Reference Point. For periodic inspections, evaluate coverage anywhere within the approved area at each airport served.

2 Airborne Coverage. Airborne coverage is evaluated during the commissioning inspection, concurrent with establishing the approved use area. Since there is no standard service volume, the area is predicated on the need for VOT service, facility performance, and frequency protection. Establishing an approved use area, which is a fixed radius around the VOT site, normally 10 to 15 miles, can provide the most beneficial service. An alternative to this method would be to fly a separate 3-mile orbit around each airport where VOT service will be provided.

During the commissioning type inspections, fly the orbits at the minimum and maximum altitudes at which VOT use will be authorized, normally between 1,000 and 5,000 ft. On periodic inspections, evaluate facility performance anywhere within the approved area of use.

NOTE 1: Maximum suggested coverage orbit speed is 250 KIAS.

NOTE 2: Restrictions to Coverage--Notify appropriate airport personnel of any areas within line-of-sight of the VOT where sufficient signal is not available, and issue any and all applicable NOTAM(s) IAW FAA Order (NOTAM Section).

h. Monitor: This check assures that a valid course is transmitted within specified values. For flight inspection purposes, the remote alarm unit must be considered a part of the monitor.

(1) Maneuvering. Conduct this check at the VOT reference point or at any point on the airport where a valid signal is received.

(2) Analysis:

(a) Establish a normal reference. Record and measure the course.

(b) Facilities Maintenance personnel should shift the course to the alignment monitor reference. Record and measure the course.

(c) **Facilities** Maintenance personnel should shift the course in the opposite direction to the alignment monitor reference. Record and measure the course.

(d) **Facilities** Maintenance personnel should return the course to normal. Record and measure the course.

i. Standby Power:

(1) **Maneuvering.** Inspections are to be performed at the VOT reference point.

(2) **Analysis.** Check alignment, modulations, ID, sensing, and signal strength.

(3) **Other considerations.** Standby power checks are not required for facilities powered by floating batteries (Uninterruptible power supplies (UPS), etc.) that are constantly charged by another power source. The Facility Data Sheet should indicate the source of standby power.

SECTION 6. TABLES

11.60 TABLES

Table 11-6

INTERSECTIONS (Coverage)			
Primary radials = 4 nm or 4.5°, whichever is greater		**NDB(s)**	**Crossing Radial (not primary)**
Distance from Facility in nm	**Degrees Off-Course = 4 nm**		
5	38.7	± 5°	± 3.6°
6	33.7	± 5°	± 3.6°
7	29.7	± 5°	± 3.6°
8	26.6	± 5°	± 3.6°
9	24.0	± 5°	± 3.6°
10	21.8	± 5°	± 3.6°
11	20.0	± 5°	± 3.6°
12	18.4	± 5°	± 3.6°
13	17.1	± 5°	± 3.6°
14	15.9	± 5°	± 3.6°
15	14.9	± 5°	± 3.6°
16	14.0	± 5°	± 3.6°
17	13.2	± 5°	± 3.6°
18	12.5	± 5°	± 3.6°
19	11.9	± 5°	± 3.6°
20	11.3	± 5°	± 3.6°
21	10.8	± 5°	± 3.6°
22	10.3	± 5°	± 3.6°
23	9.9	± 5°	± 3.6°
24	9.5	± 5°	± 3.6°
25	9.1	± 5°	± 3.6°
26	8.7	± 5°	± 3.6°
27	8.4	± 5°	± 3.6°
28	8.1	± 5°	± 3.6°
29	7.9	± 5°	± 3.6°
30	7.6	± 5°	± 3.6°
31	7.4	± 5°	± 3.6°
32	7.1	± 5°	± 3.6°
33	6.9	± 5°	± 3.6°
34	6.7	± 5°	± 3.6°
35	6.5	± 5°	± 3.6°
36	6.3	± 5°	± 3.6°
37	6.2	± 5°	± 3.6°
38	6.0	± 5°	± 3.6°
39	5.9	± 5°	± 3.6°
40	5.7	± 5°	± 3.6°
41	5.6	± 5°	± 3.6°
42	5.4	± 5°	± 3.6°
43	5.3	± 5°	± 3.6°
44	5.2	± 5°	± 3.6°
45	5.1	± 5°	± 3.6°

Distance from Facility in nm	Degrees Off-Course = 4 nm		
46	5.0	± 5°	± 3.6°
47	4.9	± 5°	± 3.6°
48	4.8	± 5°	± 3.6°
49	4.7	± 5°	± 3.6°
50.8	4.5	± 5°	± 3.6°
52	4.09	± 5°	± 3.6°
53	4.17	± 5°	± 3.6°
54	4.25	± 5°	± 3.6°
55	4.33	± 5°	± 3.6°
56	4.41	± 5°	± 3.6°
57	4.49	± 5°	± 3.6°
58	4.56	± 5°	± 3.6°
59	4.64	± 5°	± 3.6°
60	4.72	± 5°	± 3.6°
61	4.80	± 5°	± 3.6°
62	4.88	± 5°	± 3.6°
63	4.96	± 5°	± 3.6°
64	5.04	± 5°	± 3.6°
65	5.12	± 5°	± 3.6°
66	5.19	± 5°	± 3.6°
67	5.27	± 5°	± 3.6°
68	5.35	± 5°	± 3.6°
69	5.43	± 5°	± 3.6°
70	5.51	± 5°	± 3.6°
71	5.59	± 5°	± 3.6°
72	5.67	± 5°	± 3.6°
73	5.75	± 5°	± 3.6°
74	5.82	± 5°	± 3.6°
75	5.90	± 5°	± 3.6°
76	5.98	± 5°	± 3.6°
77	6.06	± 5°	± 3.6°
78	6.14	± 5°	± 3.6°
79	6.22	± 5°	± 3.6°
80	6.30	± 5°	± 3.6°
81	6.37	± 5°	± 3.6°
82	6.45	± 5°	± 3.6°
83	6.53	± 5°	± 3.6°
84	6.61	± 5°	± 3.6°
85	6.69	± 5°	± 3.6°
86	6.77	± 5°	± 3.6°
87	6.85	± 5°	± 3.6°
88	6.93	± 5°	± 3.6°
89	7.00	± 5°	± 3.6°

Distance from Facility in nm	Degrees Off-Course = 4 nm		
90	7.08	± 5°	± 3.6°
91	7.16	± 5°	± 3.6°
92	7.24	± 5°	± 3.6°
93	7.32	± 5°	± 3.6°
94	7.40	± 5°	± 3.6°
95	7.48	± 5°	± 3.6°
96	7.56	± 5°	± 3.6°
97	7.63	± 5°	± 3.6°
98	7.71	± 5°	± 3.6°
99	7.79	± 5°	± 3.6°
100	7.87	± 5°	± 3.6°
101	7.95	± 5°	± 3.6°
102	8.03	± 5°	± 3.6°
103	8.11	± 5°	± 3.6°
104	8.18	± 5°	± 3.6°
105	8.26	± 5°	± 3.6°
106	8.34	± 5°	± 3.6°
107	8.42	± 5°	± 3.6°
108	8.50	± 5°	± 3.6°
109	8.58	± 5°	± 3.6°
110	8.66	± 5°	± 3.6°
111	8.74	± 5°	± 3.6°
112	8.81	± 5°	± 3.6°
113	8.89	± 5°	± 3.6°
114	8.97	± 5°	± 3.6°
115	9.05	± 5°	± 3.6°
116	9.13	± 5°	± 3.6°
117	9.21	± 5°	± 3.6°
118	9.29	± 5°	± 3.6°
119	9.37	± 5°	± 3.6°
120	9.44	± 5°	± 3.6°
121	9.52	± 5°	± 3.6°
122	9.60	± 5°	± 3.6°
123	9.68	± 5°	± 3.6°
124	9.76	± 5°	± 3.6°
125	9.84	± 5°	± 3.6°
126	9.92	± 5°	± 3.6°
127	10.00	± 5°	± 3.6°
128	10.07	± 5°	± 3.6°
129	10.15	± 5°	± 3.6°
130	10.23	± 5°	± 3.6°
131	10.31	± 5°	± 3.6°
132	10.39	± 5°	± 3.6°
133	10.47	± 5°	± 3.6°
134	10.55	± 5°	± 3.6°
135	10.62	± 5°	± 3.6°

Distance from Facility in nm	Degrees Off-Course = 4 nm		
136	10.70	± 5°	± 3.6°
137	10.78	± 5°	± 3.6°
138	10.86	± 5°	± 3.6°
139	10.94	± 5°	± 3.6°
140	11.02	± 5°	± 3.6°
141	11.10	± 5°	± 3.6°
142	11.18	± 5°	± 3.6°
143	11.25	± 5°	± 3.6°
144	11.33	± 5°	± 3.6°
145	11.41	± 5°	± 3.6°
146	11.49	± 5°	± 3.6°
147	11.57	± 5°	± 3.6°
148	11.65	± 5°	± 3.6°
149	11.73	± 5°	± 3.6°
150	11.81	± 5°	± 3.6°
151	11.88	± 5°	± 3.6°
152	11.96	± 5°	± 3.6°
153	12.04	± 5°	± 3.6°
154	12.12	± 5°	± 3.6°
155	12.20	± 5°	± 3.6°
156	12.28	± 5°	± 3.6°
157	12.36	± 5°	± 3.6°
158	12.43	± 5°	± 3.6°
159	12.51	± 5°	± 3.6°
160	12.59	± 5°	± 3.6°
161	12.67	± 5°	± 3.6°
162	12.75	± 5°	± 3.6°
163	12.83	± 5°	± 3.6°
164	12.91	± 5°	± 3.6°
165	12.99	± 5°	± 3.6°
166	13.06	± 5°	± 3.6°
167	13.14	± 5°	± 3.6°
168	13.22	± 5°	± 3.6°
169	13.30	± 5°	± 3.6°
170	13.38	± 5°	± 3.6°
171	13.46	± 5°	± 3.6°
172	13.54	± 5°	± 3.6°
173	13.62	± 5°	± 3.6°
174	13.69	± 5°	± 3.6°
175	13.77	± 5°	± 3.6°
176	13.85	± 5°	± 3.6°
177	13.93	± 5°	± 3.6°
178	14.01	± 5°	± 3.6°
179	14.09	± 5°	± 3.6°
180	14.17	± 5°	± 3.6°

Distance from Facility in nm	Degrees Off-Course = 4 nm		
181	14.25	± 5°	± 3.6°
182	14.32	± 5°	± 3.6°
183	14.40	± 5°	± 3.6°
184	14.48	± 5°	± 3.6°
185	14.56	± 5°	± 3.6°
186	14.64	± 5°	± 3.6°
187	14.72	± 5°	± 3.6°
188	14.80	± 5°	± 3.6°
189	14.87	± 5°	± 3.6°
190	14.95	± 5°	± 3.6°
191	15.03	± 5°	± 3.6°
192	15.11	± 5°	± 3.6°
193	15.19	± 5°	± 3.6°
194	15.27	± 5°	± 3.6°
195	15.35	± 5°	± 3.6°
196	15.43	± 5°	± 3.6°
197	15.50	± 5°	± 3.6°
198	15.58	± 5°	± 3.6°
199	15.66	± 5°	± 3.6°
200	15.74	± 5°	± 3.6°

CHAPTER 12. RADIO BEACONS

TABLE OF CONTENTS

Paragraphs *Title* *Pages*

SECTION 1. LOW AND MEDIUM FREQUENCY NONDIRECTIONAL BEACONS (NDB)

12.10 INTRODUCTION 12-1
a. General 12-1
b. Characteristics 12-1
c. Classification 12-2
d. Identifier 12-2
e. Monitoring 12-3

12.11 MAINTENANCE ACTIONS REQUIRING FLIGHT INSPECTION AND SPECIFIC PREFLIGHT REQUIREMENTS 12-3
a. Activities Requiring Flight Inspection 12-3
b. Coordination 12-3
c. NDB(s) Without a SIAP 12-3

12.12 FLIGHT INSPECTION PROCEDURES 12-4
a. Identification 12-4
b. Voice 12-4
c. Coverage Orbit 12-5
d. Instrument Flight Procedures 12-6
e. ESV 12-7
f. Station Passage 12-7
g. Standby Equipment 12-8
h. Standby Power 12-8
i. Special Inspections 12-8

12.13 REPORTING 12-8

12.14 TABLES AND SUPPLEMENTAL INFORMATION 12-8

Figures

Figure 12-1 Coverage Orbit 12-5
Figure 12-2 Low Approach 12-7

This Page Intentionally Left Blank

CHAPTER 12. RADIO BEACONS

SECTION 1. LOW AND MEDIUM FREQUENCY NONDIRECTIONAL BEACONS (NDB)

12.10 INTRODUCTION

a. General. An NDB is a low or medium frequency radio beacon that transmits non-directional signals in a frequency band of 190 to 535 kHz and 1,600 to 1,750 kHz, using a continuous carrier keyed with either 400 or 1,020 Hz modulation. In some installations, NDB(s) are collocated with DME or ILS marker beacons. The airborne receiver installation is usually called an Automatic Direction Finder (ADF).

b. Characteristics. Radio beacons are subject to disturbances that may result in erroneous bearing information. Disturbances include lightning and precipitation static, and nighttime interference from distant stations. Nearly all disturbances that affect the direction finding bearing also affect the facility identification being transmitted.

(1) Antenna Current. The signal strength obtained at any point throughout the rated coverage area is directly proportional to the current in the vertical radiator of the antenna. Doubling the antenna current will double the strength at a fixed point or double the range for a fixed value of signal strength.

(2) Ground Conductivity. The transmitter power necessary to drive a given current through the antenna and ground system varies with the soil conductivity at the antenna site. The signal strength of the ground wave also depends on the conductivity of the soil between the transmitter and receiver. The conductivity of seawater is higher than soil, hence the range over seawater is usually greater than over land.

(3) Altitude. An increase in signal strength can be expected as the aircraft height is increased, the effect being most marked over soil of poor conductivity, and almost negligible over seawater.

(4) Noise. The effective coverage is limited by the ratio of the strength of the steady (non-fading) signal received from the NDB to the total noise intercepted by the ADF receiver. If the signal-to-noise ratio is less than the limiting value, useful bearings cannot be obtained.

(5) Night Effect. The effective coverage of an NDB is also limited at night when a skywave, reflected from the ionosphere is present at the receiver in addition to the vertically polarized ground wave on which the system depends. The interaction of these two signals from the NDB results in bearing errors in the ADF. The effect is independent of transmitter power.

(6) Terrain Effects. Errors in ADF bearings are often produced over rugged terrain or where abrupt discontinuities occur in the ground surface conductivity. The effect results in an oscillating bearing and usually diminishes with increasing aircraft altitude.

c. Classification. NDB(s) are classified according to their intended use. When an NDB is used in conjunction with an ILS, it is called a Compass Locator. Compass Locators are often paired with marker beacons. For U.S. facilities, voice transmissions are made on radio beacons unless the letter "W" (without voice) is included in the class designator (e.g., HW). NDB classifications are:

(1) Compass Locators, including LOM and LMM, standard service volume of 15 nm. These facilities are installed at the marker sites associated with ILS facilities. The compass locator at the outer maker is designated as a LOM, (locator outer marker), and the one at the middle marker as a LMM, (locator middle marker). Output power is 25 watts or less.

NOTE: M and H class beacons can also be used as compass locators, in which case the standard service volume would increase to that class level, i.e., MLOM standard service volume is 25 nm, and a HLOM standard service volume is 50 nm.

(2) MH Facility, standard service volume of 25 nm. These facilities are used for short-range navigational purposes. The facility provides navigation information and, in some cases, communication service. Authorized output power is 50 watts or less.

(3) H Facility, standard service volume of 50 nm. These facilities are used for medium- to long-range navigation and are located along the airways where needed to provide suitable coverage. The facility provides navigation information and, in some cases, communication and weather broadcast service. Authorized output power is from 50 to 2,000 watts.

(4) HH Facility, standard service volume of 75 nm. These facilities are used for long-range and over-water navigation. The facility usually provides weather broadcasts, communication and navigation information. Authorized output power is 2,000 watts or more.

d. Identifier. Radio beacons transmit a continuous Morse code identifier. Some facilities have a voice feature. A voice feature may be live from a remote location, transcribed weather, or AWOS/ ASOS. A live voice feature may interrupt the facility identification.

(1) The Morse code identification of all classes of NDB facilities, except compass locators, is repeated 5 to 15 times per minute depending on equipment type. Compass locators are identified in the same manner, except the repetition rate is 7 to 20 times per minute.

(2) A three-letter code is used to identify all classes of NDB facilities except compass locators. All radio beacons except the compass locators transmit a continuous three-letter identification code except during voice transmissions.

A two-letter code is used to identify compass locator facilities. The code letters are obtained from the code of the associated ILS. The first two letters of the ILS identification are used to identify the outer compass locator (LOM), and the last two letters of the ILS identification are used to identify the middle compass locator (LMM).

e. Monitoring. All federal NDB facilities must have local monitor and shutdown capabilities. The remote monitor receiver will serve only as a remote status indicator.

12.11 MAINTENANCE ACTIONS REQUIRING FLIGHT INSPECTION AND SPECIFIC PREFLIGHT REQUIREMENTS.

a. Activities **Requiring** a Confirming Flight Inspection**:**

(1) Major changes in local obstructions, buildings, etc., which may affect the signal strength and coverage.

(2) Replacing the antenna with a **different type** antenna. Modifications of the antenna or to the ground plane.

(3) Change in the antenna current to increase or decrease the service area.

(4) Frequency change.

b. Coordinate with facility maintenance to be on site for commissioning type inspections in order to adjust power during the coverage orbit, and change transmitters if dual transmitters are installed. For periodic inspections of dual transmitter facilities, coordinate to have the NDB operating on the transmitter not checked during the last periodic inspection. If a live voice feature is available, determine the necessary contact procedures to arrange a transmission during the inspection. If the inspection requires a coverage orbit, prepare a chart with coverage altitudes calculated for each segment of the orbit.

c. NDB(s) Without a SIAP. An NDB without any NDB SIAP(s) may still be used for IFR purposes (e.g., compass locator, feeder route to a localizer, or crossing bearing at a fix supporting another kind of SIAP). Only NDB(s) with NDB SIAP(s) or ones supporting an NDB airway are scheduled for periodic inspections by the FICO. There is no practical way to track which of the remaining NDB(s) might support other kinds of SIAP(s). Hence, it is the flight inspector's responsibility to examine every SIAP they inspect to determine: (1) If an NDB supports the procedure (not limiting the review to the final segment), and (2) if so, determine if that NDB is scheduled by the FICO for periodic inspections. If it is not scheduled for periodic inspections and does support a procedure, the flight inspector must conduct a periodic inspection of that NDB as a matter of course when completing either the periodic inspection of the main facility (e.g., ILS or VOR) that required the SIAP to be inspected, or the special SIAP inspection.

12.12 FLIGHT INSPECTION PROCEDURES. The primary objectives of flight inspection are to determine the coverage and quality of the guidance provided by the NDB system and to check for interference from other stations. These assessments are to be made in all areas where coverage is required and with all operational procedures designed for the NDB, in order to determine the usability of the facility and to ensure that it meets the operational requirements for which it was installed. Note that tolerances are based on average atmospheric conditions. The flight inspector is expected to use good judgment in differentiating between facility performance and unusual atmospheric phenomena. Radio beacons are subject to disturbances from lightning, precipitation, static, etc. To establish good facility performance baselines, commissioning flight inspections should be conducted in weather conditions that will not derogate or enhance facility performance. For any inspection requiring a coverage orbit, the flight inspector must prepare a chart with the facility plotted and orbit depicted.

a. Identification. The facility identification is evaluated throughout the area of intended use, including any route, airway or transition that may extend beyond the normal service volume. The evaluation should be accomplished during all required checks.

(1) Maneuvering. No specific maneuver instructions.

(2) AFIS/ Equipment Setup. See Paragraph 12.12c(2).

(3) Analysis. The facility identification is out of tolerance when it is incorrect or not identifiable. The coded characters should be correct, clear, and properly spaced.

(4) Other Considerations. On aircraft so equipped, utilize the “Ident” feature on the ADF audio panel.

b. Voice. The voice feature (if installed) is evaluated within the standard service volume. The evaluation may be accomplished while other required checks are being performed.

(1) Maneuvering. No specific maneuver instructions.

(2) AFIS/ Equipment Setup. See Paragraph 12.12c(2).

(3) Analysis. The voice feature is out of tolerance if it renders the facility identification not decipherable (except live voice). The voice transmission should be evaluated for quality, modulation and freedom from interference. Record the maximum usable voice range on commissioning for future reference. The voice feature should be clear and recognizable for a minimum of two-thirds the standard service volume range. Notify maintenance anytime the voice reception distance is less than the required range. Facility restrictions are not determined by the voice feature. The voice feature should be removed from service if it adversely affects the facility identification.

(4) Other Considerations. On aircraft so equipped, utilize the “Voice” function on the ADF audio panel.

c. Coverage Orbit. Standard service volume coverage is evaluated by flying orbits at the lowest coverage altitude. Facility Maintenance determines the reduced power output of the facility during coverage checks. At facilities where dual transmitters are installed, facility coverage for maximum useable distance may be evaluated by alternating transmitters. Switch transmitters at least every 30 degrees.

(1) Maneuvering. Fly an orbit about the facility at the maximum distance specified by the facility classification. The orbit altitude must be 1,500 ft above facility site elevation, or the minimum altitude which will provide 1,000 **(2,000 ft in designated mountainous areas) above intervening terrain or obstacles, whichever is higher as determined by map study.** Coverage orbits are usually completed counterclockwise, as the ADF navigation needle parks to the right if the signal has an unlock. Sectors found out of tolerance must be evaluated using orbits at reduced distances or increased altitudes in an attempt to determine facility restrictions. Monitor the facility identification during coverage checks, as the loss of the identifier usually corresponds with the loss of the NDB signal.

Figure 12-1

Coverage Orbit

Aircraft Configuration

A/C	Speed KIAS	Flaps	Gear
CL601/ 4	250 Max	UP	UP
Lear 60	250 Max	UP	UP
BE300	250 Max	UP	UP
HS125	250 Max	UP	UP

Class	Coverage	Voice
Compass Locator	15 nm	10 nm
MH Facility	25 nm	16.67nm
H Facility	50 nm	33.33nm
HH Facility	75 nm	50 nm

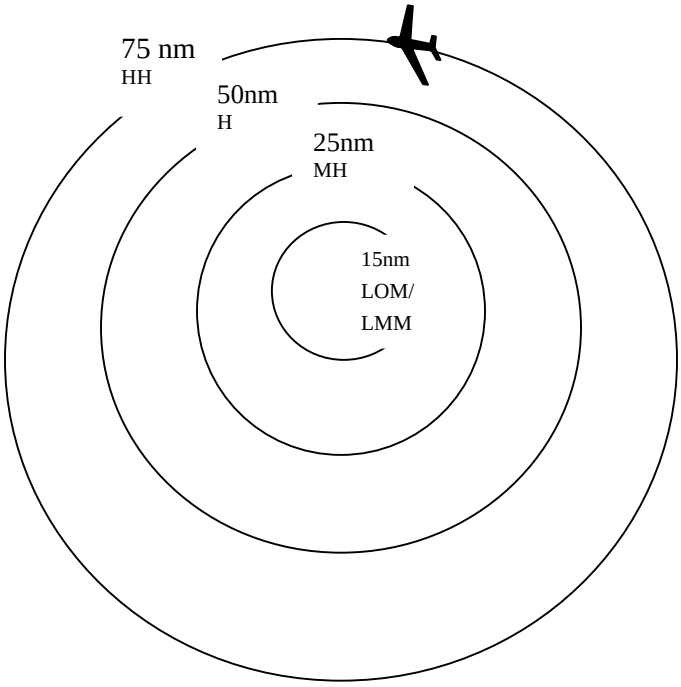

(2) AFIS/ Equipment Setup. AFIS is not approved for NDB signal analysis; however, if needed to monitor the distance and bearing from the facility, an NDB can be selected on the AFIS. On the FI FAC page, enter the three-letter IDENT, followed by the appropriate type identifier IAW TI 4040.55. For example, the CMH compass locator would be selected by entering CMHO. After the facility is selected, ensure accuracy of the retrieved data by comparing it to the data sheet, making changes, if necessary. In some aircraft, the pilot can display the AFIS distance and bearing information on the flight deck CDU (FI NAV page). Alternatively, range and bearing distance can be obtained by programming the FMS or GPS by entering the facility coordinates from the Facility Data Sheet.

(3) Analysis. Evaluate the signal for out of tolerance needle oscillations, weak or garbled identification, and interference throughout the coverage area. If the facility performance does not meet tolerances to the SSV, the facility will have the status of restricted or unusable, and NOTAM action is required. If there is a suspicion the beacon carrier frequency is out of tune (off frequency), have ground maintenance check the transmitted frequency, or evaluate with the onboard spectrum analyzer.

(4) Other Considerations. NDB restrictions must be sectored as bearings from the facility. See Chapter 5 for examples of NDB restrictions.

Recommendation: The number of sectors should be kept to a minimum, and preferably should not exceed two.

d. Instrument Flight Procedures

(1) Maneuvering:

(a) Commissioning or Evaluating Amended Procedures. Fly each new procedural segment that uses a facility bearing at the minimum procedural altitude. Fly final approach segments in the direction of intended use. After the procedure turn or FAF, descend to 100 feet below the minimum descent altitude for the segment. In addition, descend to 100 feet below all step-down fix altitudes inside the FAF. Evaluate holding patterns, airways, routes and transitions along the entire procedure at the minimum procedural altitude(s).

(b) Periodic Inspections. Required coverage evaluations during periodic inspections are limited to surveillance checks of any airways, routes or transitions to the extent the aircraft is maneuvered to position for other required checks, as well as all SIAP final approach segments. For SIAP(s) with a FAF, cross the FAF at the minimum published altitude and descend to at least 100 feet below the minimum descent altitude for that segment. For SIAP(s) without a FAF, fly the final segment from the procedure turn distance at the minimum published procedure turn completion altitude and descend to at least 100 feet below the minimum descent altitude for that segment. In addition, descend to 100 feet below all step-down fix altitudes inside the FAF.

(2) AFIS/ Equipment Setup. See Paragraph 12.12c(2).

(3) Analysis. Evaluate the signal for out of tolerance needle oscillations, weak or garbled identification, and interference.

(4) Other considerations. Verify procedural FDC and facility NOTAM(s) and published data for the facility. Verify that new procedural bearings are not in sectors where the facility is restricted.

Recommendation: Where two locators are used as supplements to an ILS, the frequency separation between the carriers of the two should be not less than 15 kHz to ensure correct operation of the radio compass, and preferably not more than 25 kHz in order to permit a quick tuning shift in cases where an aircraft has only one radio compass.

Figure 12-2
Low Approach

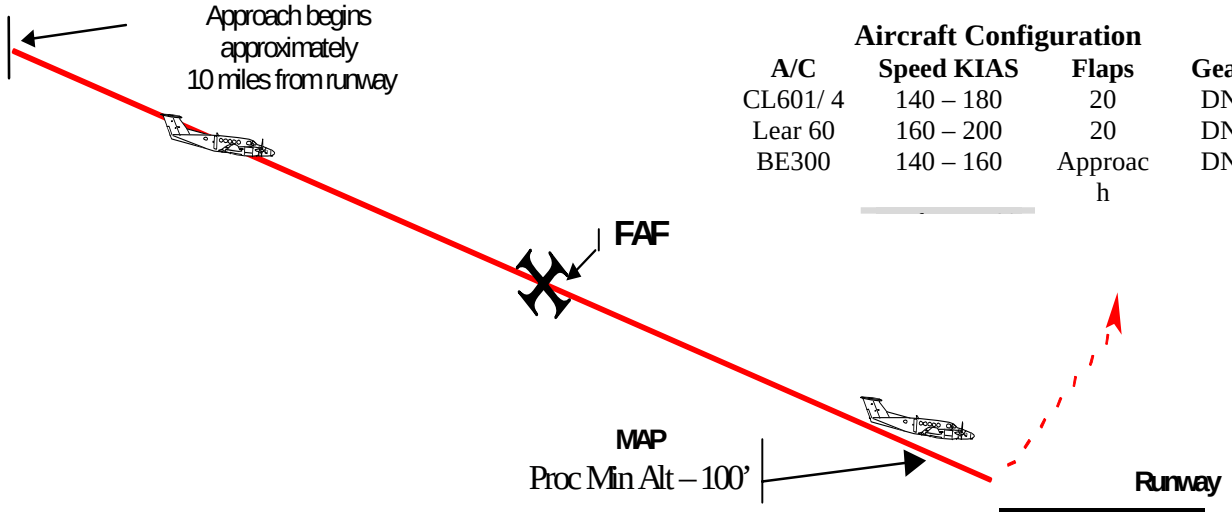

Aircraft Configuration

A/C	Speed KIAS	Flaps	Gear
CL601/ 4	140 – 180	20	DN
Lear 60	160 – 200	20	DN
BE300	140 – 160	Approach	DN

e. ESV. For ESV(s), refer to Chapter 22. Coverage at greater than the orbital distance for specific fixes, airways, routes or transitions, may be evaluated on one transmitter. Establish at normal power.

f. Station Passage. Needle reversal should occur when the aircraft passes directly over, or in very close proximity to the facility.

(1) Maneuvering. Overfly the antenna at the minimum procedural altitude.

(2) AFIS/ Equipment Setup. See Paragraph 12.12c(2).

(3) Analysis. Station passage is out of tolerance if any indication of false station passage occurs, or if station passage does not occur over the station. Momentary needle hunting while near or over the station does not in itself constitute false station passage.

g. Standby Equipment. If dual transmitters are installed, evaluate all required parameters for each transmitter during a commissioning inspection. When practical, for periodic inspections of dual transmitter facilities, conduct the inspection using the transmitter not checked during the pervious periodic inspection.

(1) Maneuvering. No specific maneuver instructions.

(2) AFIS/ Equipment Setup. See Paragraph 12.12c(2).

(3) Analysis. Evaluate the same as primary equipment.

(4) Other Considerations. See Chapter 5 for standby equipment NOTAM.

h. Standby Power. If standby power is installed and of such a type that Order 8200.1 requires it be checked, have the facility power source switched to the standby source and repeat all the flight inspection checks (one transmitter only).

(1) Maneuvering. No specific maneuver instructions.

(2) AFIS/ Equipment Setup. See Paragraph 12.12c(2).

(3) Analysis. Evaluate the signal for out of tolerance needle oscillations, weak or garbled identification, and interference within the coverage area.

(4) Other considerations. Standby power checks are not required for facilities powered by batteries that are constantly charged by another power source. The Facility Data Sheet should indicate the source of standby power.

i. Special Inspections.

(1) Antenna Change. A special inspection will be conducted when an antenna is replaced with a new type, or modifications are made to the antenna or to the ground plane, or there is a change in antenna current designed to change the coverage area. Evaluate coverage by flying a coverage orbit and the final segments of any SIAP(s). Fly any airways, routes, or transitions and re-evaluate any associated ESV(s). There is no requirement to conduct any checks on standby power or to check the standby transmitter if it is a dual transmitter facility.

(2) Transmitter Change. A flight inspection is not required if the transmitter equipment is replaced, provided ground maintenance can match the established antenna current reference. If ground maintenance does request flight inspection, follow the antenna change checklist requirements outlined in Order 8200.1C, Chapter 12.

(3) Frequency Change. A special inspection will be conducted when a frequency change is made to the facility. Evaluate coverage by flying a coverage orbit and the final segments of any SIAP(s). A surveillance check of any airways, routes, or transitions should be made incidental to aircraft maneuvering to position for other required checks. There is no requirement to reevaluate ESV(s), or conduct any checks on standby power or to check the standby transmitter if it is a dual transmitter facility.

12.13 REPORTING. Reference Order VN200 8240.4, Daily Flight Log (DFL), FAA Form 4040-5, and FAA Order 8240.36, Flight Inspection Report Processing System (FIRPS).

12.14 TABLES AND SUPPLEMENTAL INFORMATION. See NDB Flight Inspection Worksheet, Appendix 11.

CHAPTER 13. AREA NAVIGATION (RNAV)

TABLE OF CONTENTS

Paragraphs *Title* *Pages*

SECTION 1. AREA NAVIGATION (RNAV)

13.10 INTRODUCTION....13-1
a. Flight Management System (FMS)....13-2
b. Global Positioning System (GPS)....13-2
c. ARINC 424 Specification....13-3

13.11 PREFLIGHT REQUIREMENTS....13-3
a. Aircraft....13-3
b. Navigation Database....13-3
c. Pilot-Defined Procedure....13-3
d. Evaluation of Procedure Data....13-4
e. Navigation System Status....13-4

13.12 FLIGHT INSPECTION PROCEDURES....13-4
a. Description....13-4
b. Maneuvering....13-5
c. Analysis....13-7
d. Other Considerations....13-7

SECTION 2. REQUIRED NAVIGATION PERFORMANCE (RNP) RNAV

13.20 INTRODUCTION....13-9

13.21 FLIGHT INSPECTION PROCEDURES....13-9

13.22 OBSTACLE VERIFICATION....13-9

SECTION 3. DME SUPPPORTED PROCEDURES

13.30 INTRODUCTION....13-10

13.31 FLIGHT INSPECTION PROCEDURES....13-10
a. AFIS/ Equipment Setup....13-10
b. Maneuvering....13-11
c. Analysis....13-13
d. Other Considerations....13-13

5
13.32 TABLES AND SUPPLEMENTAL INFORMATION....13-15

TABLE OF CONTENTS

Paragraphs *Title* *Pages*

SECTION 4. RNAV WIDE AREA AUGMENTATION SYSTEM (WAAS)

13.40 INTRODUCTION 13-17

13.41 PREFLIGHT REQUIREMENTS 13-17
a. Aircraft 13-17
b. Navigation Database 13-17
c. Pilot-Defined Procedure 13-18
d. Evaluation of Procedure Data 13-18
e. LPV FAS Data Block Verification 13-18
f. WAAS Status 13-18

13.42 FLIGHT INSPECTION PROCEDURES 13-19
a. Description 13-19
b. Maneuvering 13-19
c. AFIS/ Equipment Setup 13-20
d. Aircraft Positioning 13-24
e. WAAS Interference 13-25

13.43 FLIGHT INSPECTION ANALYSIS 13-25
a. Obstructions 13-25
b. Procedural/ Design Database Integrity 13-25
c. CRC Remainder 13-25
d. Standard Instrument Approach Procedure (SIAP) 13-26
e. Position Determination 13-26
f. Communications and RADAR 13-26
g. WAAS Signal 13-26

13.44 PARAMETERS 13-26

13.45 DOCUMENTATION 13-27

SECTION 5. LOCAL AREA AUGMENTATION SYSTEM (LAAS)

13.50 INTRODUCTION 13-28

13.51 FLIGHT INSPECTION PROCEDURES (Reserved) 13-28

Figures

Figure 13-1 Single Waypoint Flight Profile 13-6
Figure 13-2 Example of Pilot Navigation Area (PNA) 13-12
Figure 13-3 RNAV WAAS LPV Approach Flight Profile 13-19

CHAPTER 13. AREA NAVIGATION (RNAV)

SECTION 1. AREA NAVIGATION (RNAV)

13.10 INTRODUCTION. Area Navigation (RNAV) is a method of navigation that permits aircraft operation on any desired course within the limits of a self-contained system capability. Many of these systems are capable of providing vertical guidance. Flight Management Systems (FMS) with multiple sensors and Global Positioning System (GPS) navigators are most common. These systems navigate with reference to geographic positions called waypoints.

Multi-sensor RNAV equipment determines aircraft position by processing data from various input sensors. Unlike early RNAV systems which used only VOR/ DME rho-theta for position fixing, multi-sensor navigation systems employ a variety of sensors, such as: distance measurements from two or more DME ground stations (DME/ DME), VOR/ DME, inertial reference unit (IRU), Loran-C, and GPS. These various sensors may be used by the navigation computer individually, or combined in various ways (based on internal software programming) to derive aircraft position. Navigation values, such as distance and bearing to a waypoint (WP), are computed from the derived latitude/ longitude and the coordinates of the waypoint. Course guidance is generally provided as a linear deviation from the desired track of a great circle route. RNAV procedures consist of sequenced ARINC 424 coded path and terminators and waypoints. The desired course may be pilot selectable (e.g., pseudo course or go direct) or may be determined by the navigation database, based on the ground track coded between successive waypoints. Use of a combination of different ARINC 424 leg path and terminators provides the desired ground track and vertical path of a procedure. The FAA has developed a charting format for RNAV Procedures. This format maximizes the information available to the pilot for the safe and efficient conduct of the instrument procedure. Stand-alone FMS and GPS approach charts will be replaced with the RNAV charting format.

Many RNAV procedures now include vertical guidance (VNAV). Vertical guidance is provided as a linear deviation from the desired vertical path, defined by a line joining two waypoints with specified altitudes, or as a vertical angle from a specified waypoint. Computed positive vertical guidance is based on barometric, satellite elevation, or other approved systems. The desired vertical path may be pilot selectable, or may be determined by the VNAV computer, with computations based on the ARINC 424 coding in the navigation base. RNAV approaches with vertical guidance are classified as Approach with vertical guidance (APV).

RNAV approach charts provide separate minima for Lateral Navigation (LNAV), Lateral and Vertical Navigation (LNAV/ VNAV), and Lateral Precision with Vertical guidance (LPV). Flight inspection of an LNAV procedure (without vertical navigation) may be accomplished with any flight inspection aircraft capable of the procedure's ARINC 424 path and terminators. Inspection of an RNAV procedure with vertical guidance requires an appropriately equipped flight inspection aircraft.

a. Flight Management System (FMS). The FMS is a computer system that uses a navigation database to allow routes to be pre-programmed and fed into the system by means of a data loader. The FMS is constantly updated, with respect to position accuracy, by reference to ground and/ or space-based navigational sources. The FMS and its associated database ensure that the most appropriate navigation sensors are automatically selected during the information update cycle.

b. Global Positioning System (GPS). The Global Positioning System (GPS) is a Department of Defense (DoD) operated global coverage, satellite-based navigation system. It provides standard positioning service (SPS) to all equipped users, plus precision position service (PPS) to DoD and other specially equipped users. GPS is an Earth Referenced Navigation (ERN) system that consists of three distinct functional segments; the **space segment, control segment** and **user segment.**

(1) The space segment consists of a satellite constellation in six orbital planes (with four in each plane) at approximately 11,000 miles above the earth. This segment provides the signal structure necessary for user equipment to determine time, a position fix in terms of latitude and longitude, and altitude as required. The GPS constellation broadcasts a pseudo-random code-timing signal and data message that the airborne equipment processes to obtain satellite position and status data. By knowing the precise location of each satellite and precisely matching timing with the atomic clocks on the satellites, the airborne receiver can accurately measure the time each signal takes to arrive at the receiver and determine aircraft position.

The satellites radiate on two frequencies; L1 at 1575.42 MHz and L2 at 1227.6 MHz. The satellites transmit their signals using spread spectrum techniques, employing two different spreading functions: a 1.023 mbs coarse/ acquisition (C/A) code on L1 and a 10.23 Mbs precision (P) code on both L1 and L2 transmitted in phase quadrature. Total bandwidth around each carrier is 20.46 MHz. Superimposed on both the C/ A and P-code is the navigation message containing satellite ephemeral data, C/ A to P-code hand-off, atmospheric propagation correction data, and satellite clock-bias information. This data is transmitted at 50 bps. The minimum power level (signal strength) available at the output of the user antenna is -160 dbw.

(2) The GPS control segment is responsible for monitoring the status of each satellite and updating the navigation data transmitted by each satellite. This segment consists of the master control station, five monitoring stations, and three up-link antenna facilities. Satellite information is transmitted from the monitor stations to the master control station. The master control station uses this information to update the contents of the navigation data via the ground up-link antennas.

(3) The user segment consists of antennas and receiver-processors onboard the aircraft that provide position, velocity, and precise timing to the user. The GPS receiver calculates a position fix using a ranging technique. The user equipment determines the pseudo-ranges from at least four satellites to calculate the receiver's internal clock offset and the three-dimensional position fix. The signal transmitted by each satellite is modulated with data that defines the satellite's position (ephemeral), the GPS system time, its clock error, and the health and accuracy of the transmitted data. The user equipment is able to decode this information and determine where the satellite is located at any given time (pseudo-range).

c. ARINC 424 Specification. ARINC Specification 424 is a standard by which a navigation database is created to interface with an airborne navigation computer (i.e., FMS, GPS receiver, etc.). The navigation database will provide paths and termination points for the navigation computer to follow. ARINC 424 defines 23 leg path and terminators. A limited number of the leg types can be used to define RNAV procedures. The leg types used to define RNP RNAV procedures are further limited in order to provide repeatable aircraft ground tracks.

13.11 PREFLIGHT REQUIREMENTS

a. Aircraft. The aircraft avionics configuration must be appropriate to support the procedure to be flight inspected.

b. Navigation Database. Verify a current navigation database is installed. Use waypoint data from the FMS/ GPS navigation database when available. The National Flight Database (NFD) is the government source for ARINC 424 navigation data. When NFD navigation data is available, it must be used for the flight inspection. Flight procedures to be inspected must be entered into the FMS/ GPS navigation system database. The procedure may be on a supplied database, downloaded from an electronic media, or entered manually (Pilot-Defined) from official source documentation.

c. Pilot-Defined Procedure. RNAV procedures (databases) are designed (coded) using ARINC-424 path and terminators. Path and terminator combinations can result in different ground tracks; hence, requiring utmost compliance with the "official government source documentation".

Entering the RNAV procedure as a route does not adequately represent the ARINC 424 leg types used to define the procedure or provide for the intended ground track on which obstacle clearance and environmental requirements are based. A difference in the ARINC 424 coded data from the source documentation can result in very different FMS/ GPS performance and aircraft ground and vertical track.

d. Evaluation of Procedure Data. Prior to the procedure being flown, leg segment data accuracy must be evaluated by comparison of the procedural waypoint data to the flight plan waypoint data. Use the official source documentation to obtain the ARINC 424 coding.

Verify **true** course to next waypoint, distances, and the FPA indicated on the FMS or GPS accurately reflects the procedure design. The procedure course must be displayed on the EFIS during the inspection. The procedure depicted on the EFIS shall agree with the chart. Out-of-tolerance values must be resolved with the procedure designer.

e. Navigation System Status. Determine the status of the required navigation system(s) (e.g., DME, GPS, LAAS, and WAAS) before every flight inspection and after an inspection that detects anomalies. NOTAM(s) and GPS Service Interruptions (interference testing) location and schedule should be considered.

13.12 FLIGHT INSPECTION PROCEDURES

a. Description. The flight inspection of RNAV procedures will evaluate safety, flyability, human factors, and workload. Use appropriate FAA Order(s) (i.e., 8260.3, 8260.38, 8260.42, 8260.44, 8260.48, 8260.51) for required obstruction clearance criteria. Any anomalies found during inspection must be resolved before the procedure is signed.

Ground track path error performance varies with mode of flight guidance system coupling. It is imperative to evaluate new procedures coupled to the flight director and autopilot (when not prohibited). Evaluate for lateral and vertical disconnects from the autopilot/ flight director. Lateral and vertical transitions from departure, en route, descent, and approach must produce a seamless path that ensures flyability in a **consistent, smooth, predictable, and repeatable manner.**

(1) Commissioning. The RNAV procedure shall be entered into the FMS/ GPS navigation system. It may be on a supplied database, downloaded from an electronic media, or entered manually from official source documentation.

(2) Periodic. The procedure must be loaded from the navigation system database. If the procedure does not reside in the database (i.e., private approach, unpublished, etc.), the commissioning procedures in (1) above must be used.

b. Maneuvering

(1) RNAV Departure Procedure (DP)/ Standard Instrument Departure (SID). Verify the CDI is in terminal scaling. An RNAV DP/ SID should be flown from an actual takeoff. When runway limitations preclude a takeoff, a low approach method may be used, crossing the Departure End of Runway (DER) at 35 ft or the altitude specified in the procedure. Position the aircraft on course centerline. Fly in the direction of intended use at minimum climb gradient and altitudes specified by the procedure. The departure procedure will be flown to the point or fix at which an existing en route phase begins

NOTE: DME coverage evaluation may require an actual takeoff.
See Section 3, DME/ DME Supported RNAV.

(2) Routes. Fly routes at minimum procedure altitude. Program waypoints as "fly-by", unless otherwise designated. Confirmation of communications and RADAR coverage on all segments is required, unless otherwise specified by the procedure.

(3) Standard Terminal Arrival Route (STAR). Vertical navigation/ descent gradients, leg combinations, leg lengths, and human factors involving use of FMS operations require evaluation. When altitude and/ or airspeed constraints are shown on the procedure, fly the procedure at the specified altitudes/ speeds. If an altitude window is specified, fly the procedure using altitudes within the constraints that provide the steepest descent path to evaluate for excessive descent gradient. Refer to Chapter 6, Calculating Deceleration Segment Length (Vertical Flyability). The arrival procedure must be flown through transition to an instrument approach procedure, if terminating at an IF/ IAF. Fly STARS in the direction of intended use where a vertical profile is specified.

(4) Initial and Intermediate segment evaluation may be performed when flying by the waypoint if depicted as such on the procedure. Initial and Intermediate segments must be flown at procedural altitudes.

(5) RNAV Approach Procedure. Document DME coverage at the procedural (true) altitude(s) for all segments up to the Final Approach Fix. Fly the Final Approach Segment (FAS), descending on path to 100 ft below the lowest minima. The vertically guided RNAV approach procedure and the LNAV-only procedure are designed with different obstruction criteria. The final segment of the approach (FAWP to MAWP) may have different obstructions controlling the vertically guided Decision Altitude (DA) and LNAV Minimum Descent Altitude (MDA). The final segment may require repeated flights for obstacle evaluation. The final approach segment must be flown to an altitude 100 ft below all step-down fix altitudes inside the FAF, 100 ft below proposed minimum descent altitudes inside the FAF, and 100 ft below the proposed minimum descent altitude. Approaches with vertical guidance must be evaluated to the proposed decision or missed approach altitude.

NOTE: Loss of DME facility coverage between the FAF and the MAP is expected. The aircraft's inertial will provide navigation guidance to the MAP and throughout the missed approach segment.

(6) Missed Approach

(a) For a commissioning inspection, fly the missed approach segment(s) as depicted in the procedure.

(b) For a periodic inspection, fly the missed approach procedure to a point where the flight inspector can identify any obstacles that could be a potential hazard.

(7) Single Waypoints. DME coverage and accuracy will be verified based on an orbit centered on the waypoint coordinates. The radius of the orbit shall be calculated based on the DME station farthest from the waypoint, using the formula contained in Appendix 2, or 3.0 nm, whichever is larger. Document DME coverage at 100 ft below the procedural (true) altitude.

Figure 13-1
Single Waypoint Flight Profile

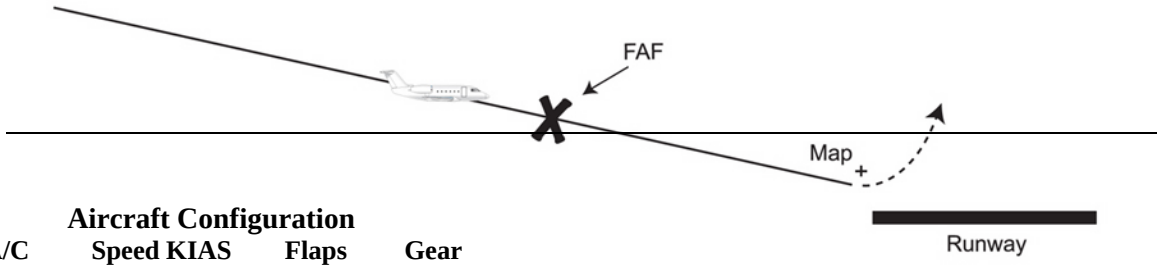

Aircraft Configuration

A/C	Speed KIAS	Flaps	Gear
CL601/ 4	140 - 180	20	DN
Lear 60	160 – 200	20	DN
BE300	140 – 160	Approach	DN
HS125	Vref+25	15	DN

c. Analysis

FLIGHT CHECK

Observe the following during the approach -

- Verify correct altimeter setting (critical for VNAV).
- Monitor FMS MSG's for pertinent info (ANP 'reset altitude-select' reminders, etc.).
- Monitor AFIS CDU FIX page 4/4 GPS data &/or GPS mode FI DAT page to watch for signs of interference. If interference suspected, ET must record GPS data.
- If appr supported by DME/ DME, ET must record req'd stations.
- Fly autopilot-coupled to 400' AGL or MDA/DA whichever higher (AFM limitation).
- Fly transition legs-to-final per the procedure.
- Check VNAV guidance to TCH is correct.
- Check lateral delivery is within limits at MAP.
- Press GA button and fly the MAP segment at least once (A/P should be re-engaged on climbout).
- RESET altitude select following approach.
- Verify obstacles.
- To refly the approach from an IAF transition, go DTO the IAF or HDG to a Psuedo-TO course to the IAF. Selection of a NAV or Heading mode on the Collins Pro Line flight director may be required for the approach to rearm.
- APPR will automatically rearm & reactivate. Press A/P APPR mode button to rearm offside A/P FMS.

d. Other Considerations. Flight inspection of RNAV procedures determines if the procedure is flyable and safe. ARINC 424 coded data will be used to compare coded path versus actual path to verify all data prior to inclusion into the National Flight Database (NFD) and release to the public and other database suppliers. If a new procedure is unsatisfactory, the Flight Inspector shall coordinate with the procedures designer, ATC, and/ or the proponent of the procedure, as applicable, to determine the necessary changes. When existing procedures are found unsatisfactory, notify the procedures designer immediately for Notice to Airman (NOTAM) action. As applicable, the inspector should evaluate the following items:

(1) The controlling obstacles are verified.

(2) The procedure is technically sound. Specified aircraft approach categories are appropriate. Human factors, including situational awareness, complexity, memory considerations, interpretability, cockpit workload, pilot error, and autopilot operations are considered.

(3) Waypoint spacing is sufficient to allow the aircraft to stabilize on each leg segment without jumping over waypoints/ legs. Leg length must be sufficient to allow for aircraft deceleration or altitude change, if required.

(4) The RNAV procedure will satisfactorily deliver the aircraft to an established point, which terminates the procedure (en route, fix, IAF, MAWP, decision altitude, etc.).

(5) Procedural Design. The procedure shall be evaluated to verify the geodetic coordinates (waypoints) and vertical path angles meet the requirements of Order 8200.1, Chapter 13, Section 4 tolerances.

(6) Communications, navigation system performance, and RADAR coverage (if required) are adequate for the entire procedure.

(7) Surveillance inspection of airport lighting, runway/ taxiway markings, etc., will be accomplished during the flight inspection of the procedure.

(8) GPS Parameters. The following parameters must be documented at the time anomalies are found during any phase of the flight inspection. Forward recorded data to the Operations Support Office for analysis.

Parameter	**Expected Value**
$HDOP_{GPS}$	1.0 – 4.0
$VDOP_{GPS}$	1.0 – 4.0
HIL_{GPS}	0.3 or less
HFOM	≤ 22 meters
Satellites Tracked	5 minimum
SNR	30 dB/ Hz minimum

There are no flight inspection tolerances applied to these parameters. However, the values listed above provide a baseline for analysis of system signal anomalies or interference encountered.

SECTION 2. REQUIRED NAVIGATION PERFORMANCE (RNP) RNAV

This section provides additional guidance to Section 1 of this chapter for inspection of RNP RNAV procedures.

13.20 INTRODUCTION. RNP is a statement of the navigation performance accuracy necessary for operation within a defined airspace.

RNP is stated as a number in nautical miles. This specifies how tight the avionics must contain Total System Error (TSE). RNP applies to navigation performance and includes the capability of both the available infrastructure (navigation systems) and the aircraft equipment. The RNP capability of an aircraft will vary depending upon the aircraft equipment and the navigation infrastructure. For example, an aircraft may be equipped and certified for RNP 1.0 but may not be capable of RNP 1.0 operations due to limited NAVAID coverage.

13.21 FLIGHT INSPECTION PROCEDURES. Inspect RNP RNAV procedures per Section 1. Use FAA Order 8260.51, U.S. Standard for RNP Instrument Approach Procedure Construction; FAA Order 8260.52, U.S. Standard for RNP Instrument Approach Procedures with Special Aircraft and Aircrew Authorization Required (SAAAR); or specified equivalent guidance for procedure design and required obstruction clearance criteria.

13.22 OBSTACLE VERIFICATION. Fly a 2xRNP (containment limit) offset each side of centerline (i.e., RNP-0.3 segment, fly a 0.6 nm offset each side of course centerline). Fly in the intended direction of the procedure. Program the offset as a route or approach in the FMS. Assign altitudes to the offset waypoints as required for the vertical profile.

> **NOTE:** Containment limit obstacle verification is not required on segments that have the obstacle environment surveyed or on segments that obstacles against the RNP containment limit are not a factor. Use extreme caution when flying the containment limit. Obstructions (towers, terrain, etc.) may be against the edge of the containment limit.

SECTION 3. DME SUPPPORTED PROCEDURES

13.30 INTRODUCTION. This section provides supplemental guidance to Section 1 of this chapter for inspection of RNAV procedures requiring a DME/ DME infrastructure. For most aircraft with FMS installations which do not have a GPS sensor, DME is used to calculate position. The primary method is to calculate position from the crossing angles of 2 or more DME facilities. The FMS chooses DME facilities which intersect the aircraft between 30° and 150° crossing angle. The FMS database is searched every few minutes to choose the most optimum pair of DME facilities. The optimum pair of DME facilities will have a crossing angle closest to 90°. The FMS may have a "Scanning DME" function. This function allows multiple DME facilities to be scanned in a few seconds. The more DME facilities and the more widely they are dispersed, the greater the positioning accuracy. DME positioning may be able to provide a positioning accuracy to 0.1 nm at a location of optimal DME geometry.

13.31 FLIGHT INSPECTION PROCEDURES

a. AFIS/ Equipment Setup. AFIS software will allow up to five (5) DME facilities to be monitored and recorded. DME(s) to be checked over a designated area are specified in the RNAV PRO screening output file.

(1) For procedures constructed solely for DME/ DME/ IRU operations, monitor the navigation solution by deselecting all navigation sensor(s) on the flying pilot's FMS, except DME and IRS.

(2) Cockpit TCN Tune Auto/ Man button must be in Auto mode for AFIS DME/ DME operation.

(3) While the electronic data file will be used to determine coverage, it is important to annotate passage of each waypoint on the paper recording.

(4) For DP(s)/ SID(s), STAR(s), and Q Routes, use select function on Nav Test Ctrl Page 2 for selecting leg segments to be flown.

(5) Appropriate DME facility changes will be initiated based on the RNAV PRO file (see Section 3).

b. Maneuvering. All segments requiring vertical path change must be inspected in the intended direction of flight, using minimum climb gradients and minimum altitudes specified in the procedure package. Position aircraft on course centerline.

Use the Global Navigation Satellite System (GNSS) as the primary navigation sensor for the inspection. On one FMS, monitor the DME/ DME navigation solution by deselecting all navigation sensor(s) except DME.

For procedures constructed solely for DME/ DME/ Inertial Reference Unit (IRU) operations, monitor the navigation solution by deselecting all navigation sensor(s) except DME and Inertial Reference System (IRS).

During the inspection, if a Critical, or ESV designated DME appears not to be transmitting, verify with Air Traffic or a local Flight Service Station that the facility is in service. If a DME designated Critical is off the air, the inspection must be terminated and resumed after the facility is returned to service. When there are three or less DME(s) and one of the three is out of service, the check should be rescheduled.

Document location of any map shifts or anomalies as compared with GNSS navigation solution.

(1) RNAV Departure Procedure/ Standard Instrument Departure. Departures requiring a DME/ DME navigation solution at the earliest possible point from takeoff must be flown from an actual takeoff. Position the aircraft IAW with Section 1.

(a) Parallel Runways Departing to a Common Route: If parallel runways are separated by 3,400 ft or less, the DME evaluation may be accomplished by departing from either parallel, unless the DME screening identifies runway dependent DME(s).

(b) RNAV Departures that use RADAR Vectors to Join RNAV Routes (RDVA). The Pilot Navigation Area (PNA) is an area used to transition from radar vectoring to the area navigation route. It is defined by two perimeter boundaries and an arc radius referenced from the initial departure fix (IDF). See Figure 13-2. The PNA is developed by the procedures specialist and is specified on FAA Form 8260.15B, Graphic Departure Procedure, as bearings to the IDF with arc radius and minimum altitude. The bearings to the IDF are used as perimeter boundaries. Record DME facility coverage along each perimeter boundary between the IDF and the arc radius distance, either inbound or outbound, at the minimum altitude. Refer to FAA Order 8260.53, Standard Instrument Departures That Use RADAR Vectors to Join RNAV Routes, for procedure development criteria.

Figure 13-2

Example of Pilot Navigation Area (PNA)

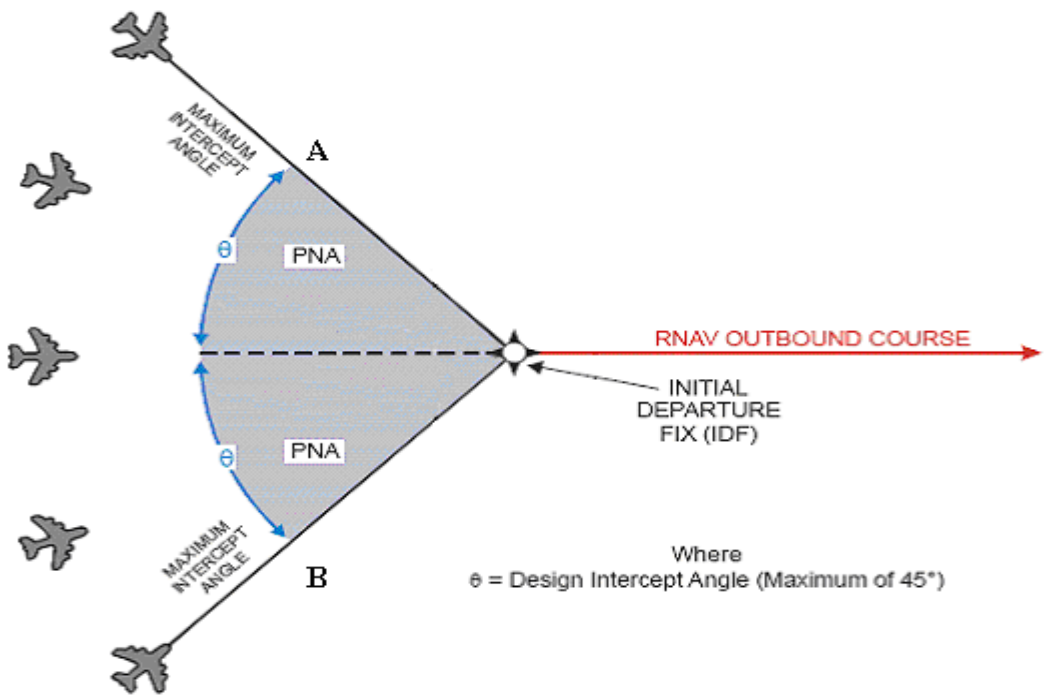

(2) **Routes** can be flown in either direction. All routes will be flown on course centerline at the minimum altitude (true) specified in the procedure package.

(3) **RNAV Standard Terminal Arrivals.** Aircraft positioning is in accordance with Section 1 of this chapter.

(4) **Approach.** Document DME coverage at the procedural (true) altitude(s) for all segments. Fly the Final Approach Segment (FAS), descending on path to 100 ft below the lowest minima.

> **NOTE:** Loss of DME facility coverage in the FAS is expected. The aircraft's IRU is expected to provide navigation guidance to the MAP and throughout the missed approach segment until a DME/ DME navigation solution is regained.

(5) **Missed Approach.** Aircraft positioning is in accordance with Section 1 of this chapter.

(6) Single Waypoints. DME coverage and accuracy will be verified based on an orbit centered on the waypoint coordinates. The radius of the orbit must be calculated based on the DME station farthest from the waypoint, using the formula contained in Appendix 2, or 3.0 nm, whichever is larger. Document DME coverage at 100 ft below the procedural (true) altitude.

c. Analysis. AFIS will determine and verify that the DME infrastructure will support a DME/ DME RNAV position solution in accordance with FAA Advisory Circular AC 90-100.xx (U.S. TERMINAL AND EN ROUTE AREA NAVIGATION (RNAV) OPERATIONS) performance criteria. Two DME/ DME infrastructure navigation performance levels are evaluated by AFIS. The two levels are for procedures requiring:

- FMS with a DME/ DME sensor and
- FMS with a DME/ DME sensor and IRU

(1) "RNAV 2 " ("Type A") RNAV SID(s)/ STAR(s)/ Routes require system performance currently met by GPS or DME/ DME RNAV systems. "RNAV 2" procedures require the aircraft's track keeping accuracy remain bounded by ± 2 nm for 95% of the total flight time. The "RNAV 2" procedure **may** require an IRU to mitigate marginal DME/ DME infrastructure.

(2) "RNAV 1" ("Type B") RNAV SID(s)/ STAR(s)/ Routes require system performance currently met by GPS or DME/ DME/ IRU RNAV systems. "RNAV 1" procedures may require the aircraft's track keeping accuracy remain bounded by ± 1 nm for 95% of the total flight time.

(3) Approach. (Reserved)

NOTE: "RNAV 2" procedures are equivalent to RNP 2.0, and "RNAV 1" procedures are equivalent to RNP 1.0 for analysis.

Results of the DME/ DME infrastructure are reported on the AFIS "Leg Summary Page". "RNAV 2" procedures (DME/ DME RNAV) are reported as a Position Estimation Error (PEE) value. "RNAV 2" procedures requiring DME/ DME/ IRU, and "RNAV 1" procedures are reported as a Total System Error (TSE) value. Procedures not meeting DME infrastructure PEE/ TSE tolerance must be returned to the procedure developer for modification.

d. Other Considerations

(1) RNAV procedures supported by a DME infrastructure will be inspected in accordance with Chapter 6. Documentation of all identified DME facilities will be accomplished through paper recordings **and** electronic collection of data (AFIS required).

(2) DME Screening: A computer-screening model (RNAV PRO) identifies DME facilities, predicted to possess the accuracy, coverage, and geometry requirements needed to provide a navigation solution to support the procedure. Flight inspection will verify DME coverage and accuracy for the FMS-equipped aircraft utilizing a DME sensor for primary navigation positioning. Results are documented in a comma separated value (CSV) file. The CSV file is loaded into AFIS for inspection of the procedure.

NOTE: RNAV Pro DME screening CSV files are direction specific. The appropriate CSV file is required for direction of flight.

(3) Confirmation of communications and radar coverage on all segments of RNAV "Q" Routes is required.

13.32 TABLES AND SUPPLEMENTAL INFORMATION

DME/ DME RNAV Procedure Process

Diagram of how DME/ DME RNAV Procedure Information is Processed for Flight Inspection

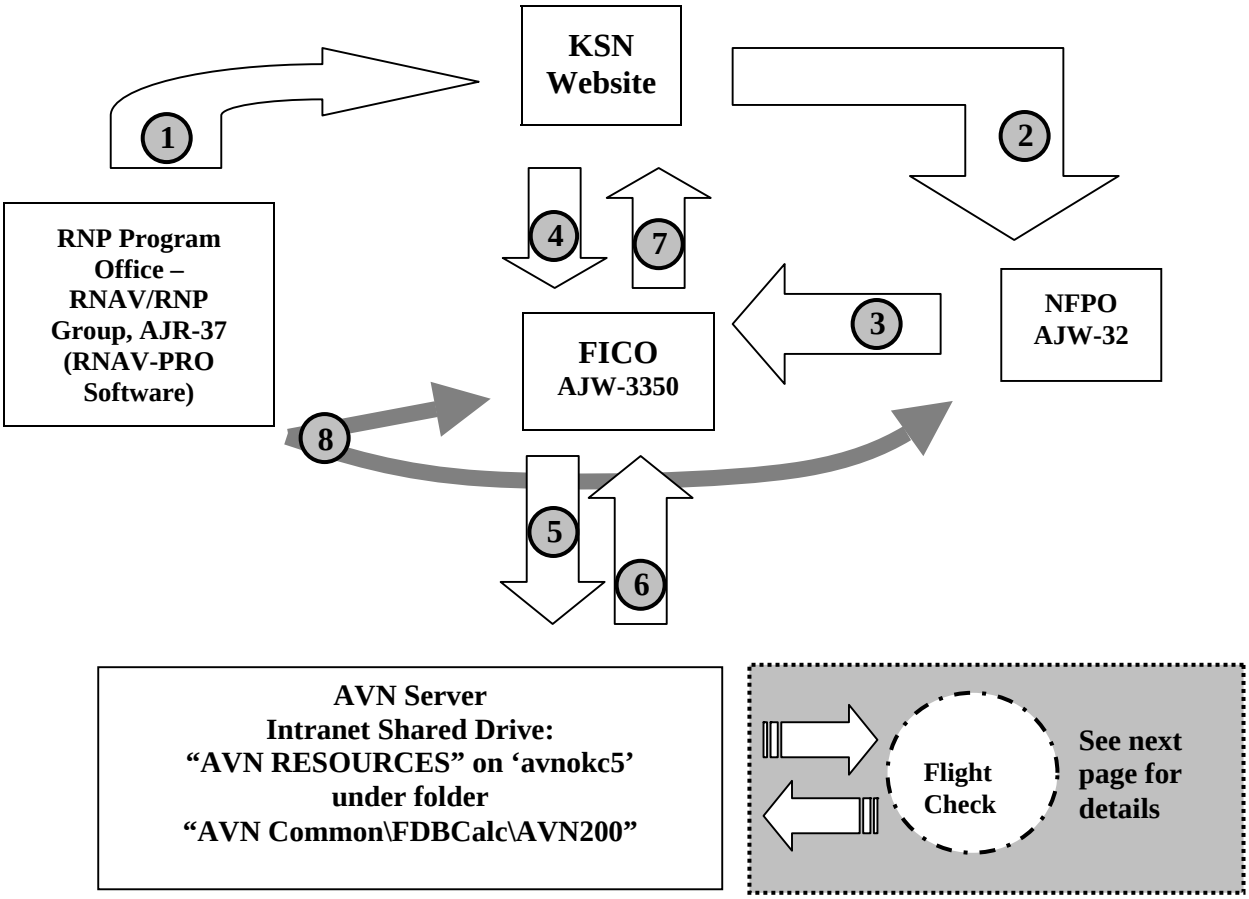

Process Steps:

1. AJR-37 Posts a RNAV-PRO, DME/DME Analysis "flight plan" (a PDF file) and associated AFIS data files (EXCEL CSV files) on KSN site (aka RNP Office Procedures Site).

2. NFPO downloads DME/DME Analysis "flight plan."

3. NFPO groups the DME/DME Analysis "flight plan" with the DME/DME Procedure Package and forwards it to the FICO.

4. FICO downloads AFIS data files from KSN site.

5. FICO posts the files on the AVN Server (AVN RESOURCES on 'avnokc5' in a folder located under: AVNCommon\FDBCalc\AVN200.

6. FICO, triggered by DFL, retrieves AFIS data file from AVN Server.

7. FICO sends AFIS data file to RNAV-PRO Group (AJR-37) for post processing, and sends signed PC to NFPO.

8. Email from RNAV-PRO Group (AJR-37) to FICO and NFPO provides official notification of RNAV PRO post evaluation results.

9. If Satisfactory, NFPO processes for publication. When found Unsatisfactory, FICO and NFPO will determine next course action. NFPO communicates plan for redesigning procedure to RNAV-PRO Group.

Details at Aviation System Standards Level for DME/DME Flight Inspection Data Files

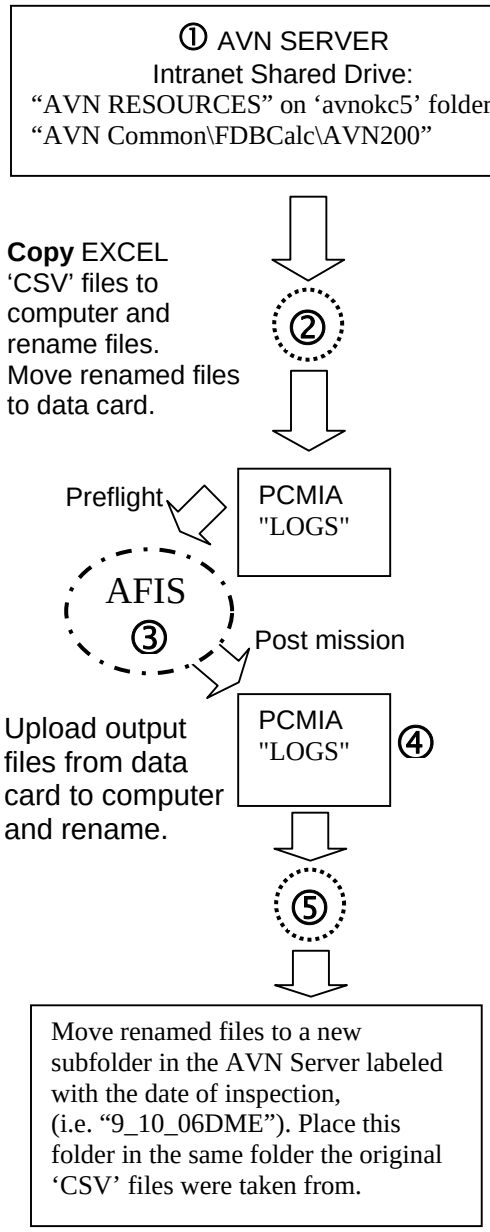

① Look for a sub-folder named similar to the procedure, or the name could reflect a project name encompassing multiple procedures. Example file names (EXCEL CSV files):
Q-24E FL200_AFIS
LONNI OMN SK_AFIS

② After files are downloaded to PC, rename files with names no longer than 8 characters with no spaces or dashes (an AFIS requirement) e.g., Q24E.CSV, or LONOMN.CSV

③ AFIS output file names* (ref. Facility Data Page):

APT ID – When the Procedure is a SID or Approach, the APT ID is <u>required</u>. Note: AFIS drops the first letter in this block when labeling the output file.

RWY ID – When the Procedure is a SID or Approach, the RWY ID is <u>required</u>. This is the runway number, e.g., 17R.

Entering Information into APT ID & RWY ID for a Q-Route or STAR will label the Output on the PCMIA data card with no impact on the FACILITY DATA.

④ Each AFIS run produces 2 output file types both with the same '###' number. For example: DMLONZFP.041 and DMOUT041.CSV.

(1) One is a "log-file" containing raw data and labeled "DMaaarrr. ###", where "aaa" comes from the APT ID, and "rrr" comes from the RWY ID, and "###" is a AFIS assigned file number.
(2) The other is a DME data AFIS output file (in EXCEL format named) "DMOUT###.CSV". The "### " matches the raw data file.

⑤ **Rename DMOUT###.CSV files according to these rules:** Use the name of the procedure, the starting point, the ending point and file ### for example: DMOUT041.CSV would become LONNI_ZFP_HEATT041.CSV. The corresponding raw data file DMLONZFP.041 should then be changed to LONNI_ZFP_HEATT.041. (For a SID, rename the DMOUT###.CSV file with: name and runway, ending waypoint, and file ###, e.g., DMOUT018.CSV will be DAWGS26R_SPA_018.CSV.)

*** Examples of how AFIS names output log files**: For a SID or Approach, it should come out labeled with the APT ID and RWY ID like: DMOKC17R.028. For a Q Route, in APT ID enter a space + 3 letters for the route, e.g., Q24. For a STAR: in APT ID enter a space + first 3 letters of name, e.g., LON for LONNI Transition. The RWY ID is typically 3 letters to represent the starting waypoint e.g. "VRB" (Vero Beach VTAC) AFIS file label is DMLONVRB.041 (raw data) and DMOUT041.CSV (DME data).

SECTION 4. RNAV WIDE AREA AUGMENTATION SYSTEM (WAAS)

13.40 INTRODUCTION. The WAAS provides augmentation, including integrity broadcasts, differential corrections, and additional ranging signals to the standard GPS signal. It provides the accuracy, integrity, availability, and continuity required to support oceanic, remote-area, en route, terminal, nonprecision approach, and precision approach phases of flight.

WAAS utilizes a network of wide-area reference stations (WRS) that receive and monitor the GPS signals. Data from these reference stations are transmitted to one of two wide-area master stations (WMS), where the validity of the signals from each satellite is assessed and wide-area corrections are computed. These validity (integrity) messages and wide-area corrections are transmitted to aircraft via Geostationary Earth Orbit (GEO) communications satellites that serve as additional sources of GPS ranging signals, increasing the number of satellites available to the system users. The WAAS signal is transmitted on the same frequency (L1 – 1575.42 MHz) and with the same type of code-division multiplex modulation as the GPS Standard Positioning Service (SPS) signal, allowing a WAAS receiver to acquire and process both the GPS and WAAS broadcasts. An integrity message transmitted by the WAAS provides the user with a direct verification of the integrity of the signal from each satellite in view.

FAA Order 8260.54, The United States Standard for Area Navigation (RNAV), specifies design criteria for RNAV WAAS approach procedures. Approaches constructed under these criteria are termed “LPV”. The lateral protection area is based on precision approach trapezoid dimensions criterion. RNAV WAAS LPV procedures can be supported to HAT values ≥ 200 feet.

13.41 PREFLIGHT REQUIREMENTS

a. Aircraft. The flight inspection aircraft shall be capable of supporting the required ARINC 424 leg type coding specified in the procedure package, have vertical navigation capability, and be equipped with a WAAS-capable GPS sensor integrated with the AFIS. AFIS “WAAS Mode” will be used for collecting WAAS data.

b. Navigation Database. Verify a current navigation database is installed in the FMS. Use data from the FMS database when available.
When the WAAS LPV database is not available, code RNAV procedures utilizing the “Pilot Defined” function of the FMS.

c. Pilot-Defined Procedure. To define an LPV procedure, use the "GWS" approach type on PLT APPR 1/4 of the UNS-1 FMS. The "GWS" approach type initiates the requirement for the FMS to use the WAAS navigation sensor for the LPV procedure.

(1) Waypoint resolution is critical. Waypoints may be entered manually when they are not included in the navigation database; enter latitude/longitude to the maximum resolution possible (thousandths (1/1,000) of a minute).

(2) When using the "Pilot Defined" function in the FMS, use the ARINC 424 paths and terminators as specified in the procedure. Enter waypoint altitudes as depicted. The end-of-approach (EOA) waypoint altitude at the threshold should be the actual runway threshold MSL altitude, plus the proposed TCH. For offset approach procedures, the end-of-approach (EOA) altitude is found by calculating the altitude at which the glide path angle (GPA) passes through the EOA waypoint.

d. Evaluation of Procedure Data. Prior to the approach being flown, approach segment data accuracy shall be evaluated by comparison of the procedural waypoint data to the flight plan waypoint data and Glide Path Angle (GPA) calculated by the UNS-1 FMS. Ensure courses, distance between waypoints and GPA accurately reflects the procedure design.

e. LPV FAS Data Block Verification. The LPV FAS data (data specified on FAA Form 8260-10) is developed and coded into binary files by the procedure designer. The FAS data files are saved into a network file for flight inspection access. Using the "FAS Pack" software tool, download the FAS data block~~s~~ files required for the scheduled itinerary onto removable disk media. For a detailed explanation of each FAS data parameter, see Order 8260.19C, Change 3, Appendix 11.

Prior to mission departure, the mission specialist should confirm AFIS access to the removable disk media. Access each individual FAS data file and confirm the Cyclic redundancy check (CRC) Remainder matches the FAA Form 8260-10 data. The CRC is an error detection algorithm capable of detecting changes in a block of data. Manual changes in AFIS to the FAS data to obtain a correct CRC remainder are not allowed.

This ensures no errors occurred during data transfer (data file integrity). Any corruption must be resolved prior to conducting the inspection. AFIS uses the FAS data to calculate course alignment and glide path angle.

f. WAAS Status. Determine WAAS status before every flight inspection and after an inspection that detects anomalies. WAAS NOTAM(s) and GPS Service Interruptions (interference testing) location and schedule should be considered. Solar storm activity may adversely affect WAAS availability. Inspection of WAAS procedures during periods of adverse GPS signal conditions should be rescheduled. The following websites can be used in the flight planning process.

(1) http://www.nstb.tc.faa.gov (for WAAS availability)

(2) http://www.sec.noaa.gov (for solar activity)

13.42 FLIGHT INSPECTION PROCEDURES. The RNAV WAAS LPV procedure shall be inspected in accordance with FAA Order 8200.1, Chapter 6, in addition to the requirements in this Chapter. Use FAA Order 8260.54 and FAA Order 8260.48 for required obstruction clearance criteria.

a. Description. For RNAV WAAS LPV, do not deselect any navigation sensors. The FMS will automatically deselect any sensors not valid for the procedure. Align the Inertial Reference Sensor (IRS) to the GPS position.

b. Maneuvering. Ground track path error performance varies with mode of flight guidance system coupling. It is imperative to evaluate procedures coupled to the flight director and autopilot, to the extent permitted by the aircraft flight manual. Additional evaluation may be accomplished by hand flying the inspection aircraft. Lateral and vertical transitions during the approach must produce a seamless path that ensures flyability in a consistent, smooth, predictable, and repeatable manner.

Figure 13-3
RNAV WAAS LPV Approach Flight Profile

	Aircraft Configuration		
A/C	**Speed KIAS**	**Flaps**	**Gear**
CL601/ 4	140 – 180	20	DN
Lear 60	160 – 200	20	DN
BE300	140 – 160	Approach	DN
HS125	Vref+25	15	DN

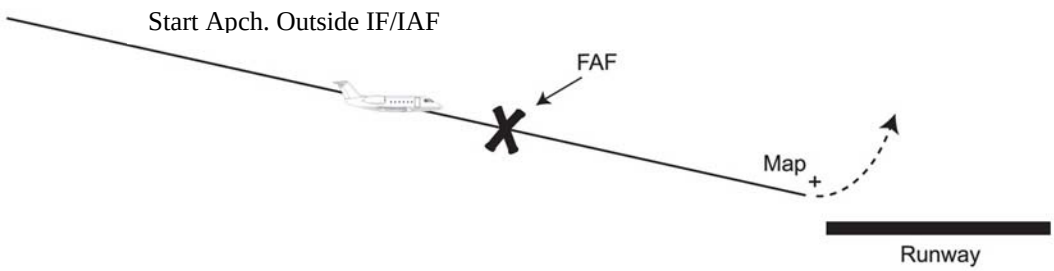

c. AFIS/ Equipment Setup

(1) AFIS Panel Setup

(a) SYSTEM SETUP page toggle WAAS ENABLED to "MMR"

(b) Using onboard aircraft calibration cards Check Aircraft Dimensions (Special Dimensions for LPV)

(c) On Service Page (MISC SERV), perform Self Test

(d) On Service Page (MISC SERV), select WAAS

(e) Go to FI WAAS Facility Data Page (FACIL DATA

(f) Insert Flash Card with FAS PACK Data & Enter:

1 APT ID example KCRQ

2 RWY ID example 24

3 SIAP ID example W24A

(g) Execute Page after inspection data is validated. If approach database fails to load from the PCMIA card, use the following guide:

1 The NCU must be rebooted.

2 Toggle the Miltope screen to any screen but MISC SERV.

Reason; If the reboot is successful the screen will automatically go to the MISC SER page and the Printer Plotter will reboot also.

3 On the AFIS CONTROL PANEL: Toggle NCU PWR from normal to reset.

4 If the NCU does not reboot (this usually happens when airborne):

On the AFIS PWR DIST circuit breaker panel PULL & RESEAT the **115VAC NCU 7½ amp** circuit breaker (LEAR 60 aircraft). (note; Do not pull the 26VAC NCU breaker)

5 MISC SERV page will appear. Go to facility data page and perform steps (g) and (h).

NOTE: CRC REMAINDER is the most important parameter. The facility database must match the 8260 –10 of the procedure package. Manual changes in AFIS to the FAS data to make the CRC remainder match are not allowed.

(h) On DME/FIX Update Control Page, toggle to DR VELOCITY HYBRID

(i) On TVPS Installation Page, Validate data (A/C dimensions will go to “0” with new program loaded)

(j) On WAAS Plot Control Page (SYS PLOT), toggle GND SPEED to ON

(k) On WAAS NAV TEST CRTL (INSP CTL) page, page forward; Change FAS DIST to “FAF TO MAP” distance from procedure package dash 3. (note: FIG or Cartoon distance may not be correct, use the dash 3) Page back; Validate the PFAF distance has changed from 5.00 to the distance from the dash 3.

(2) HP Spectrum Analyzer Setup

(a) Top left-**SET FREQUENCY** (CENTER FREQ, NOT START FREQ)

(b) Key in **1575.42** (THIS IS L1)

(c) On right side select **MHz**

(d) On right side select **SPAN**

(e) Key in **5**

(f) On right side select **MHz**

(g) On left side select **TRACES**

(h) On right side select **MAX HOLD**

(i) Turn spectrum analyzer selector to “**TACAN**”

(3) Data Logger Supplemental Information

(a) After you have executed the START command verify, on the lower left part of the NAV TEST CTRL page, that the DATLG is showing “RUN”.

(b) If the DATA LOGGER is not running:

1 Toggle to MISC SERV page

2 On the top right of the page toggle DATA LOGGER to “RESET” and EXEC CMD.

3 Then toggle DATA LOGGER to “START” and EXEC CMD.

(c) If the DATA LOGGER fails again the Flash Card may be full. Replace the card and start at Step (3)(b) again.

NOTE: Once the approach data has been loaded by selecting the procedure to be inspected, an empty flash card may be used to collect data. When changing procedures the flash card with the data must be reinstalled.

(4) UNS-1 FMS Approach Programming

(a) DATA page 1/4

(b) L/ S PILOT DATA

(c) L/ S APPROACH

(d) SEL/ ENTER ARPT. (K---)

(e) L/ S APPR DEF

(f) ENTER RUNWAY

(g) L/ S GWS

(5) FINAL

(a) PLT APPR page 1/1

(b) ENTER FAF

(c) L/ S ACCEPT

(d) EOA defaults to RWY#. (If EOA is **NOT** RWY THLD; L/S EOA and enter.)

(e) NEXT – page PLT/APPR 2/3

(f) L/ S FAF

(g) L/ S EDIT

(h) L/ S ALT CONST

(i) L/ S @

(j) ENTER FAF ALTITUDE

(k) L/ S ACCEPT

(l) PLT APPR 2/3

(m) L/ S MAP

(n) L/ S EDIT

(o) L/ S ALT CONST

(p) L/ S @

(q) ENTER RWY ALT + TCH

(r) L/ S ACCEPT

(6) MISSED

(a) NEXT PLT/APPR page 3/3

(b) L/ S BLANK AFTER EOA

(c) L/ S LEG TYPE

(d) L/ S LEG TERM (Terminator)

(e) ENTER DATA (crs, to alt, fix, etc.)

(f) L/ S ACCEPT

(g) L/ S BLANK AND ENTER DATA IF MISSED HAS ADDITIONAL LEGS

(7) IF/ IAF

(a) PREV – PLT/APPR page 2/3

(b) L/ S FAF (this pushes the flt plan down so you can enter IF)

(c) L/ S INITIAL FIX

(d) ENTER IF (usually the first fix before the FAF, many times labeled IAF)

(e) L/ S ACCEPT

(f) L/ S ALT CONST

(g) L/ S AT OR ABOVE (normally)

(h) ENTER ALTITUDE

(i) L/ S ACCEPT

(j) L/ S RETURN TWICE

(k) ENTER TRANS NAME

(l) L/ S APPR DEF

(m) NEXT – page PLT APPR 2/3

(n) L/ S APPROACH LABEL (this pushes the flt plan down so you can enter IAF)

(o) L/ S INITIAL FIX

(p) ENTER IAF NAME

(q) L/ S ACCEPT

(r) L/ S ALT CONST

(s) L/ S AT OR ABOVE (normally)

(t) ENTER ALTITUDE

(u) L/ S ACCEPT

(v) L/ S APPROACH LABEL (pushes flt plan down)

(w) L/ S TRACK (normally)

(x) ENTER FIX NAME (IF)

(y) L/ S ACCEPT

(z) L/ S ALT CONST

(aa) L/ S AT OR ABOVE (normally)

(bb) ENTER ALTITUDE

(cc) L/ S ACCEPT

(dd) If ADDITIONAL TRANS – L/ S RETURN TWICE AND REPEAT STEPS (k) – (cc).

d. Aircraft Positioning

(1) Commissioning:

(a) Maneuver as required confirming obstacle clearance on procedure segments.

(b) Start the AFIS recording outside the IF/ IAF. Paper recordings and electronic collection of data is required from the IF/ IAF to the MAP.

(c) The Initial Approach Segment evaluation may be performed when flying by the waypoint if it is depicted as a “FLY BY” waypoint on the procedure.

(d) The Initial Approach Segment and Intermediate Approach Segment shall be flown at procedural altitudes.

(e) The FAS positioning shall be on course, on path. Evaluate the Glide Path Angle (GPA) course guidance, WAAS positioning, and delivery alignment throughout the final approach segment.

(f) Confirm WAAS full scale fly-up in the FAS by conducting a BARO-VNAV below glide path run on course centerline with a vertical angle at least one degree less than the procedure GPA.

(g) Fly the missed approach segment(s) as depicted in the procedure.

(2) Periodic:

(a) Maneuver as required to confirm procedure obstruction clearance.

(b) Start the AFIS recording outside the IF/IAF. Paper recordings and electronic collection of data is required from the IF/IAF to the MAP.

(c) The Intermediate Segment shall be flown at procedural altitude(s).

(d) The FAS positioning shall be on course, on path. Evaluate the GPA, course guidance, WAAS positioning, and delivery alignment throughout the final approach segment.

(e) Fly the missed approach segment(s) to a point where the flight inspector can identify any obstacles that could be a potential hazard

e. WAAS Interference: If interference is suspected, record additional data from the two following runs. Paper recordings and electronic collection of data is required. Evaluation of the final approach segment for interference is accomplished by flying along the left and right edges of primary FAS obstruction trapezoid. (Create a route using 90° offset waypoints 0.3 nm from the PFAF and 0.1 nm from the Missed Approach Waypoint (MAWP), respectively, with a vertical angle at least one degree less than the procedure GPA (full scale fly-up). This will provide lateral/ vertical guidance slightly outside the "W" obstacle clearance surface.) Assure that a full fly-up indication is provided below the approach GPA on FAS centerline and along edges of the primary FAS obstruction trapezoid.

13.43 FLIGHT INSPECTION ANALYSIS

a. Obstructions. The controlling obstacle clearance shall be verified in accordance with FAA Orders 8260.54 and 8260.48.

b. Procedural/ Design Database Integrity. Evaluate the procedure to verify the waypoint coordinates are correct. Display the course and distance from each waypoint to the next in the flight plan. Many procedures are being amended to change the location of waypoints. In this situation, only fly the segments with azimuth adjustments greater than 2° and/or distance adjustments of 1.5NM. Obstacle validation must still be considered. Compare the course and distance values with the procedural design. Apply the tolerance requirements of FAA Order 8200.1, Chapter 13, Section 4. The ARINC 424 path and terminator coding shall provide the intended ground track and vertical path for the procedure. FAS data shall provide the designed course alignment and glide path.

c. CRC Remainder. A perfect match of the CRC will confirm the FAS data block integrity remainder documented on FAA Form 8260-10 and the CRC remainder as computed by AFIS.

d. Standard Instrument Approach Procedure (SIAP). Evaluate the instrument flight procedure to ensure flyability and safety. This evaluation and analysis shall be performed in accordance with Chapter 6 of this order.

e. Position Determination. The RNAV WAAS LPV procedure shall satisfactorily deliver the aircraft to the Decision Altitude (DA) and MAWP that terminates the approach. Approach course alignment shall be to the center of the runway at the threshold or for an offset course, alignment shall be to the MAWP.

f. Communications and RADAR coverage shall be available, where required.

g. WAAS Signal. To the extent possible, monitor WAAS signal while en route and during approach for anomalies. Print AFIS WAAS IO pages when anomalies are observed. Activate the AFIS data logger during approach inspections, when WAAS anomalies are observed, and anytime GPS/ WAAS data may need additional evaluation. If GPS interference is suspected, annotate on the flight inspection report any visual observation of radio, cellular or other facilities, which may be a possible source for emitting RFI.

NOTE: Report interference to the FICO, who will in turn forward the report to the ATCSCC/ Spectrum Assignment and Engineering Office at Herndon, Virginia.

13.44 PARAMETERS. There are no flight inspection tolerances applied to these parameters. However, the values listed below (Table 13-1) provide a baseline for analysis of any WAAS signal anomalies or interference.

The parameters in Table 13-1 must be documented throughout the Intermediate and Final Approach Segments and whenever anomalies are found during any phase of the flight inspection.

Table 13-1
GPS WAAS Parameters

Parameter	Expected Value
HPL	≤ 40 meters
VPL	≤ 50 meters
HDOP	1.0 – 1.5
VDOP	1.0 – 1.5
WAAS Healthy Satellites	4 GPS & 1 GEO minimum
Satellites Tracked	4 GPS & 1 GEO minimum
Satellites in View	4 GPS & 1 GEO minimum
Geostationary Satellite SNR	≥ 30 dB/ Hz
WAAS Sensor Status	“SBAS”

NOTE*:* Solar storm activity may affect HPL/ VPL values and other WAAS signal parameters.

Example trace of flight inspection recording of WAAS HPL/ VPL anomalies:

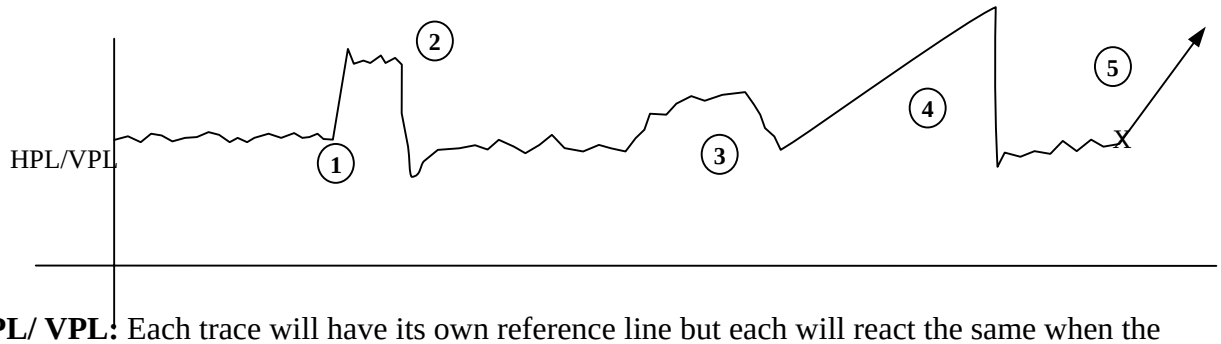

HPL/ VPL: Each trace will have its own reference line but each will react the same when the following parameters change during check.

1. Loss of a GPS satellite.
2. Acquire a new GPS satellite.
3. Weak interference will inflate HPL/ VPL a little. Strong interference will cause loss of GPS or SBAS signals.
4. Ramp caused by missing some key SBAS messages.
5. "X" Loss of GEO – HPL/ VPL ramps up to undefined/ infinite.

13.45 DOCUMENTATION. RNAV reports must be completed in accordance with FAA Order 8240.36, Flight Inspection Report Processing System. Retain and handle all recordings and documentation (paper **and** electronic) in accordance with FAA Order 8200.1.

SECTION 5. LOCAL AREA AUGMENTATION SYSTEM (LAAS)

13.50 INTRODUCTION. LAAS is a safety-critical system consisting of the hardware and software that augments the GPS Standard Positioning Service (SPS) to provide for precision approach and landing capability. The positioning service provided by GPS is insufficient to meet the integrity, continuity, accuracy, and availability demands of precision approach and landing navigation. The LAAS Ground Facility (LGS) augments the GPS SPS in order to meet these requirements. These augmentations are based on differential GPS concepts.

LAAS will supplement the GPS to improve aircraft safety during airport approaches and landings. LAAS will yield the extremely high accuracy, availability, and integrity necessary for Category I, II, and III precision approaches. It is expected that the end-state configuration will pinpoint the aircraft's position to within one meter or less with a significant improvement in service flexibility and user operating costs.

LAAS is comprised of ground equipment and avionics. The ground equipment includes 4 reference receivers, a LAAS ground facility, and a VHF data broadcast (VDB) transmitter. This ground equipment is complemented by LAAS avionics installed on the aircraft. Signals from GPS satellites are received by the LAAS GPS Reference Receivers (4 receivers for each LAAS) at the LAAS-equipped airport. The reference receivers calculate their position using GPS.

The VDB broadcasts the LAAS signal throughout the LAAS coverage area to avionics in LAAS-equipped aircraft. The LAAS reference receivers independently measure GPS satellite pseudo-range and carrier phase and generate differential carrier-smoothed-code corrections that are eventually broadcast to the user via a 31.5 kbps VHF data broadcast (in the 108 – 118 MHz band) that also includes safety and approach geometry information. This information allows users within about 28 statute miles of the LAAS ground station to perform GPS-based position fixes with 0.5-meter (95%) accuracy and to perform all civil flight operations up to non-precision approach. Aircraft landing at a LAAS-equipped airport will be able to perform precision approach operations up to at least Category I weather minima.

13.51 FLIGHT INSPECTION PROCEDURES. (Reserved)

CHAPTER 14. RADAR

TABLE OF CONTENTS

Paragraphs *Title* *Pages*

SECTION 1. SURVEILLANCE RADAR AND AIR TRAFFIC CONTROL RADAR BEACON SYSTEM (ATCRBS)

14.10 INTRODUCTION 14-1
- a. General 14-1
- b. Characteristics 14-2
- c. Classification 14-3
- d. ASR Radar Software Functions 14-4
- e. Precision Runway Monitor (PRM)/ Final Monitor Aid (FMA) System 14-6

14.11 FLIGHT INSPECTION PROCEUDRES 14-6
- a. Maneuvers 14-6
- b. VHF/ UHF Communications Capability 14-6
- c. Inspection Sequence 14-7
- d. Orientation Check 14-7
- e. Tilt Verification 14-7
- f. ATCRBS Power Optimization 14-8
- g. Primary Radar Optimization 14-9
- h. Side-Lobe Suppression (SLS) 14-10
- i. ATCRBS Modes and Codes 14-10
- j. ATCRBS Gain Time Control (GTC)/ Sensitivity Time Control (STC) 14-11
- k. Vertical Coverage 14-11
- l. Horizontal Screening 14-17
- m. Airway/ Route Coverage 14-19
- n. Fix/ Map Accuracy 14-19
- o. Fixed Target Identification 14-20
- p. Surveillance Approaches 14-20
- q. Minimum Safe Altitude Warning (MSAW)/ General Terrain Map (GTM) Validation 14-21
- r. Probing 14-22

14.12 MAINTENANCE ACTIONS AND FLIGHT INSPECTION REQUIREMENTS 14-4
- a. Primary and Secondary Radar Facilities 14-4
- b. Precision Runway Monitor (PRM) 14-5

Paragraphs *Title* *Pages*

14.13 TABLES/ SUPPLEMENTAL INFORMATION 14-25
Sample Flight Inspection Plan for Tyndall AFB, Florida..... 14-25

SECTION 2. PRECISION APPROACH RADAR (PAR)

14.20 INTRODUCTION 14-28
a. General..... 14-28
b. Characteristics..... 14-28
c. Classification 14-29

14.21 FLIGHT INSPECTION PROCEDURES..... 14-30
a. Course Alignment and Coverage (Azimuth) 14-30
b. Course Alignment (Visual)..... 14-31
c. Azimuth Only Procedures (PAR) 14-32
d. Course Deviation Accuracy..... 14-32
e. Range Accuracy..... 14-33
f. Usable Distance 14-33
g. Lateral Coverage..... 14-34
h. Moving Target Indicator (MTI)/ Moving Target Detector (MTD) 14-34
i. Glide Path Alignment 14-35
j. Lower Safe Limit Alignment..... 14-35
k. Standby Equipment..... 14-36

14.22 TABLES/ SUPPLEMENTAL INFORMATION 14-37

FIGURES

Figure 14-1 General Terrain Monitor (GTM) Area 14-4
Figure 14-2 Approach Path Monitor (APM) Area 14-5
Figure 14-3 ATCRBS Power Optimization Flight Profile..... 14-10
Figure 14-4 Commissioning Vertical Coverage Profile, ASR/ ATCRBS 14-14
Figure 14-5 Commissioning Vertical Coverage Profile, ARSR/ ATCRBS..... 14-15
Figure 14-6 ASR- Terminal Radar Profile 14-17
Figure 14-7 ARSR- En Route Radar Profile 14-17
Figure 14-8 ATCRBS Antenna Change Profile 14-18
Figure 14-9 Horizontal Screening Flight Profile..... 14-19
Figure 14-10 Horizontal Probing..... 14-23
Figure 14-11 Vertical Probing..... 14-24
Figure 14-12 Tyndall AFB Modified Vertical Profile 14-25
Figure 14-13 Horizontal Profile for Screening Evaluation 14-26
Figure 14-14 ARTS II Radar Scope with Alphanumeric Data..... 14-27
Figure 14-15 Service Volume of Typical Precision Approach Radars 14-29
Figure 14-16 Target Information Azimuth and Elevation Display 14-29
Figure 14-17 PAR Approach Flight Profile 14-31
Figure 14-18 Lower Safe Limit Flight Profile 14-37

CHAPTER 14. RADAR

SECTION 1. SURVEILLANCE RADAR and AIR TRAFFIC CONTROL RADAR BEACON SYSTEM (ATCRBS)

14.10 INTRODUCTION

a. General. This section outlines procedures for the flight inspection of surveillance radar and the air traffic control radar beacon system (ATCRBS), referred to as secondary radar. The procedures for radar flight inspection differ from the procedures for NAVAID(s) in that most of the data collection and analysis are conducted on the ground.

The flight inspector's role is primarily one of providing a known target in a designated area. Present digital techniques allow the evaluation of most radar parameters by sampling aircraft returns in the normal day-to-day radar environment. Certain requirements must be completed using a flight inspection aircraft. Facilities maintenance personnel will use targets-of-opportunity, radar data analysis software (RDAS) tools, and other test equipment to the extent practicable for completing all checklist requirements. Facilities maintenance personnel will normally evaluate and document all facility performance parameters, except those specifically evaluated by the flight inspector.

Airway Facilities will prepare a radar inspection plan for all commissioning inspections, as well as all special inspections involving coordination outside the facility of concern. Joint use facility (radar data used by both FAA and DOD) inspection plans require coordination between the FAA region and the DOD user.

Two terms associated with these systems are **Air Surveillance Radar (ASR)** and **Air Route Surveillance Radar (ARSR).**

ASR nominal range is normally out to 60nm and is more common in approach control facilities in the terminal environment.

An **ARSR** is a high gain, high power, air surveillance radar. In its track mode, it provides long-range coverage at altitudes up to 80,000 feet and distances to 200nm. In some areas, it can also be used in the terminal environment.

<u>Conditions that may hamper a Radar Inspection:</u>

Radar inspections should not be attempted during heavy precipitation, temperature Inversions, or other atmospheric conditions that may change the coverage from normal. Whenever a system parameter does not meet tolerances and cannot be adjusted within a reasonable length of time, discontinue the flight inspection until the discrepancy is resolved. This does not preclude the continuation of tests in an effort to resolve the problems.

b. Characteristics. Radar types:

(1) Primary Radar. A radar system in which a minute portion of a radio pulse transmitted from a site is reflected by an object and then received back at that site for processing and display at an air traffic control facility.

(2) Secondary (Surveillance) Radar. This is also referred to as the Air Traffic Control Radar Beacon System, or ATCRBS. It is a radar system in which the object to be detected is fitted with cooperative equipment in the form of a radio receiver /transmitter (transponder). Radar pulses transmitted from the searching transmitter/ receiver (interrogator) site are received in the cooperative equipment and used to trigger a distinctive transmission from the transponder. This reply transmission, rather than a reflected signal, is then received back at the transmitter/receiver site for processing and display. **Three main components that make up the Secondary Radar System are**

(a) The Interrogator. The ground-based radar beacon transmitter-receiver that scans in synchronism with the primary radar and transmits discrete radio signals which repetitiously requests all transponders in the mode being used to reply. The replies received are then mixed with the primary radar returns and both are displayed on the same radarscope.

(b) The Transponder. This airborne radar beacon transmitter-receiver automatically receives the signal from the interrogator and selectively replies with a specific pulse group (code) only to those interrogations being received on the mode to which it is set. These replies are independent of, and much stronger than a primary radar return. A mode is the letter or number assigned to a specific pulse spacing of radio signals transmitted or received by ground the ground interrogator/airborne transponder components of the ATCRBS. Mode A (Military Mode 3) and Mode C (Altitude Reporting) are used in Air Traffic Control.

An integral part of the ATCRBS ground equipment is the decoder. This equipment enables the controller to assign discrete transponder codes to each aircraft under his/her control. Assignments are made by the ARTCC computer on the basis of the National Beacon Code Allocation Plan (generic name for the National Airspace System and also includes Canada and Mexico). There are 4,096 aircraft transponder codes that can be assigned. An aircraft must be equipped with Civilian Mode A or Military Mode 3 capabilities to be assigned a transponder code. Another function of the decoder is that it is also designed to receive Mode C altitude information from an aircraft so equipped. This system converts aircraft altitude in 100-foot increments to coded digital information, which is transmitted together with Mode C framing pulses to the interrogating ground radar facility. When you hear an air traffic controller tell a pilot to "squawk Ident", this means that the pilot should activate the Ident feature of the transponder, which causes the assigned code number to appear on the controller's radarscope.

(c) The Radarscope displays returns from both the primary radar system and the ATCRBS. These returns, called targets, are what the controller refers to in the control and separation of traffic. With the ATCRBS, data blocks (alpha/ numeric display) show the flight number, altitude, ground speed, climb or descent, emergency, hand-off, loss of radar contact, and other information on the radarscope.

c. Classification. Radar, utilized by air traffic control facilities, is divided into two broad general categories. Both types can scan through 360° of azimuth and present target information on radar displays. In normal ATC operations, ASR and ASRS are combined with the ATCRBS (secondary surveillance radar), although ATCRBS can be utilized by itself.

(1) Airport Surveillance Radar (ASR) is designated to provide short-range (50 miles maximum) coverage in the general vicinity of an airport and to serve as an expeditious means of handling terminal area traffic through observation of precise aircraft locations on a radarscope. Most medium-to-large radar facilities in the U.S. utilize some form of the Automated Radar Terminal System (ARTS). This is the generic term for the functional capability afforded by several automated systems. Each differs in functional capabilities and equipment. In general, an ARTS displays for the terminal controller aircraft identification, flight plan data, and other information in conjunction with his/her radar presentation. Normal radar co-exists with the alphanumeric display. In addition to enhancing visualization of the air traffic situation, ARTS facilitates intra and inter facility transfer and coordination of flight information. Each ARTS level has the capability of communicating with other ARTS types, as well as with ARTCC(s).

(2) Air Route Surveillance Radar (ARSR) generically refers to ARTCC radar, used primarily to detect and display an aircraft's position while en route between terminal areas. In some instances, ARSR may enable an ARTCC to provide terminal radar services similar to, but usually more limited than those provided by a radar approach control. En route coverage can extend up to 400 miles; however, 200 miles is the normal working range.

All ARTCC radars, as well as most airport surveillance radars in the United States, have the capability to interrogate Mode C and display altitude information to the controller. However, there are a small number of airport surveillance radars that are still two-dimensional (range and azimuth only); consequently, altitude information must be obtained from the pilot.
At some locations within the ATC environment, secondary only (no primary radar) gap filler radar systems are used to give lower altitude radar coverage between two larger radar systems, each of which provides both primary and secondary radar coverage. In the geographical areas serviced by secondary radar only, aircraft without transponders cannot be provided with radar service. Additionally, transponder-equipped aircraft cannot be provided with radar advisories concerning primary targets and weather.

(3) Precision Approach Radar (PAR). There is one more type of radar that we will briefly examine: Precision Approach Radar. In the United States, it is mostly utilized by the military.

Radar equipment in some ATC facilities operated by the FAA and/or the military services at joint-use civil/military locations and separate military installations is used to detect and display azimuth, elevation, and range of aircraft on the final approach course to a runway. This equipment may be used to monitor certain non-radar approaches, but it is primarily used to conduct a ***precision*** instrument approach wherein the controller issues guidance instructions to the pilot, which is based on the aircraft's position in relation to the final approach course (azimuth), the glide path (elevation), and the distance (range) from the touchdown point on the runway, as displayed on the radarscope.

Range is limited to 10 miles, azimuth to 20°, and elevation to 7°; consequently, only the final approach is covered. This differs from an ASR approach, which is non-precision (no elevation) and covers a broader area.

d. ASR Radar Software Functions. Minimum Safe Altitude Warning System (MSAW is a software function of the Automated Radar Terminal System (ARTS). ARTS refers to the entire radar system from radar unit through the computer processor to the radar display. A major function is its design to generate an alert when an aircraft with Mode-C is at or predicted to be at an unsafe altitude. MSAW monitors aircraft for terrain and obstacle separation and will generate an alert, both aural and visual, on the display of the air traffic controller. MSAW consists of two detection components: General Terrain Map (GTM) and Approach Path Monitor (APM).

(1) General Terrain Monitor (GTM) exists within a 55 nm radius of the associated ASR site and consists of 4,096 “bins” which are 2 nm square. Each bin is assigned an alert altitude determined by the highest terrain or obstacle that affects the bin *plus 500 ft*. When an aircraft is below or projected to go below the assigned bin altitude, an alert is generated on the radar display for the controller.

Figure 14-1 General Terrain Monitor (GTM) Area

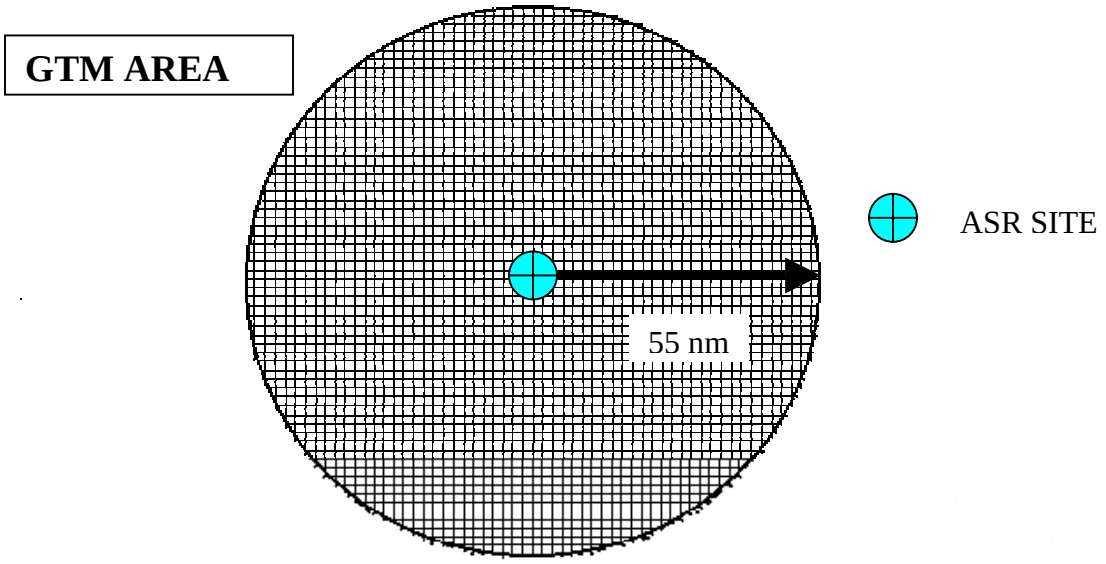

(2) Approach Path Monitor (APM). An APM is normally 1 nm wide, either side of ***final approach course or runway heading***. An APM starts at approximately 5 nm (or final approach fix) from the approach end of runway. The APM terminates at approximately 1 nm from the approach end of the runway. An altitude value is determined for obstruction clearance for each APM at the beginning and at the end of the APM. These two values provide MSAW protection as an aircraft descends along the approach path towards the runway. Parallel runways utilize the same APM. For a circling only SIAP, the APM starts at 5 nm (or final approach fix) from the closest landing surface and terminates 1 – 2 nm from the closest landing surface.

Figure 14-2
Approach Path Monitor (APM) Area

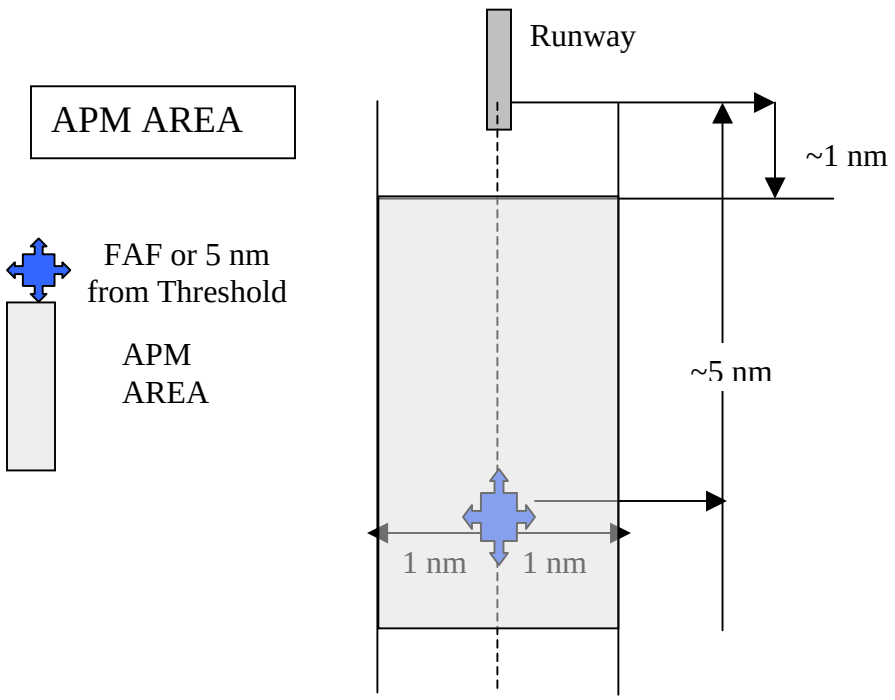

NOTE: Most Air Traffic Controllers are not aware of the difference between GTM and APM software. They use the term MSAW or "low altitude alert system" to include both systems.

Flight inspection of MSAW is a test of the ARTS software and does not **affect the associated ASR status. There are** no **flight inspection tolerances.**

Site-specific data are available through the MSAW Web Site. This data will list all APM(s) within the associated ASR coverage area. One GTM check will be completed during the periodic interval. The flight inspection aircraft is a dedicated target for the alert check. Flight inspection aircraft used for primary radar and ATCRBS checks are equipped with a transponder that has been FAA-calibrated in accordance with applicable avionics maintenance standards. The transponder power output and sensitivity are pilot-selectable per the following table:

e. Precision Runway Monitor (PRM)/ Final Monitor Aid (FMA) System. The PRM is a high update mono-pulse secondary surveillance radar system that employs an electronically scanned phased array antenna and high-resolution color monitors. It is used to monitor ILS/ MLS approaches on runways whose extended centerlines are separated by at least 3,400 ft, but less than 4,300 ft. In addition, runway separation may be decreased to 3,000 ft if the localizer courses are aligned at least 2 1/2° to 3° divergent to each other. A simultaneous offset instrument approach is applicable where parallel runway centerlines are from 750 to 3,000 ft apart. High-resolution color monitoring displays with visual and audible alerts, called Final Monitor Aids (FMA(s)), are required to present surveillance track data to controllers, along with detailed maps depicting approaches and the no transgression zone. Flight inspection of the PRM system will be conducted IAW FAA Order 8200.39, Flight Inspection of Precision Runway Monitors/ Final Monitor Aid Systems.

14.11 MAINTENANCE ACTIONS AND FLIGHT INSPECTION REQUIREMENTS

a. Primary and Secondary Radar Facilities

(1) Activities **Requiring** a Confirming Flight Inspection:

(a) Anytime secondary radar directional output power is reduced below the minimum output power level, or the omni to directional power ratio is increased above the level previously flight inspected.

(b) When the responsible regional office engineer, delegated by the regional AF division, deems it necessary to verify the operational capabilities of the equipment, due to circumstances affecting system performance.

(c) A flight inspection may be requested after installation of a new map, if displayed fixes are not coincident with those on the previously certified map. Fix/ map accuracy checks of FAA radar are not required after installation of a new map overlay, video map, or digital map, because of added or relocated navigational aids or fixes, if the controller is satisfied through evaluation of user traffic, that the new map is accurate. Controller/ maintenance personnel retain the option to request a special fix/map accuracy flight inspection.

NOTE: Initial evaluation of the facility will be conducted using targets-of-opportunity and radar data acquisition subsystems (RDAS). Final evaluation requires flight inspection.

b. Precision Runway Monitor (PRM)

(1) Activities Requiring a Confirming Flight Inspection

(a) After an antenna change, antenna pattern tilt change, or when it is suspected that there has been a change in the antenna pattern.

(b) When the responsible regional office engineer, delegated by the regional AF division, deems it necessary to verify the operational capabilities of the equipment, due to circumstances affecting system performance.

(c) Anytime the receiver Sensitivity Time Control (STC) curve is adjusted to provide a greater gain reduction than the value previously flight inspected.

(d) Anytime directional output power is reduced below the minimum output power level, or the sum to difference power ratio is increased above the level previously flight inspected.

(e) Targets-of-opportunity shall not be used in lieu of a flight inspection, but may be used as a tool to justify a flight inspection when a change in the antenna pattern is suspected.

14.12 FLIGHT INSPECTION PROCEDURES. With the exception of an Airport Surveillance Approach (ASR), Flight Inspection aircraft act as a dedicated target for maintenance personnel in order to adjust or configure the RADAR equipment.

a. Fly all requested maneuvers at cruise airspeed unless otherwise directed or at the Flight Inspector's discretion.

b. Evaluate VHF/ UHF communications capability within the radar coverage area. When flight inspection aircraft are not equipped for UHF communications, the inspection can be completed using VHF only. UHF coverage may be confirmed by the appropriate air traffic facility via targets of opportunity.

Flight Inspection Transponder Switch Settings		**Flight Inspection Transponder Parameters**	
Flt Insp Select	**Lo-Power Select**	**Rx Sensitivity**	**Tx Power**
OFF	OFF	Normal (-75 dbm)	Normal (350 watts)
ON (barber pole lit)	OFF	Low (-69 dbm)	Normal (350 watts)
ON (barber pole lit)	ON (barber pole lit)	Low (-69 dbm)	Low (88 watts)

c. Inspection Sequence. The Radar engineer must ensure the facility is operating according to design specifications before any inspection tests begin. The inspection should begin with:

- Orientation
- Tilt
- And an initial ATCRBS power setting.

NOTE: Parameter changes that occur during the flight inspection aircraft evaluation may require a repetition of previously conducted tests.

d. Orientation Check is accomplished to verify the radar azimuth corresponds with a known azimuth position and may be conducted with a flight inspection aircraft or ground check.

(1) AFIS/ Equipment Setup

(a) Enter Lat/ Long of Facility in AFIS to fly Reference Radial

(b) Flight Inspection Transponder settings:
Lo-Power Select: Off
Flt Insp Select: On

(2) Maneuvering. Fly inbound or outbound radially over a well-defined ground checkpoint or position the aircraft using AFIS. The altitude and distance of the checkpoint should be well inside the radar coverage limits.

(3) Analysis. Compare the azimuth observed by the controller with the magnetic azimuth of the checkpoint.

NOTE: A radar permanent echo (PE), maintenance beacon, or moving target indicator (MTI) reflector of known location may be used to determine alignment of the radar azimuth in lieu of a flight inspection aircraft.

e. Tilt Verification is accomplished to verify the primary and secondary radar antenna tilt settings are optimum and the mechanical antenna tilt indicators are accurate.

(1) AFIS/ Equipment Setup

(a) Flight Inspection Transponder settings:
Lo-Power Select: Off

(2) Maneuvering. Facilities maintenance personnel will direct the aircraft through the heaviest ground clutter within operational areas so the predetermined angle can be evaluated and adjustments made, if required.

(3) Analysis. The tilt selection process considers the interaction of various radar parameters and the final radar performance. The optimum tilt angle is a compromise between coverage, (With or without MTI), over clutter and range coverage.

If radar coverage is acceptable and the radar range is satisfactory, complete the remaining portions of the flight inspection.

If parameters are not acceptable, it will be necessary to reestablish the antenna tilt angle. In this case, re-accomplish any previously completed flight inspection procedures using the new antenna tilt angle.

NOTE: Checks may be accomplished by software analysis using targets of opportunity or radar data acquisition subsystems (RDAS).

f. ATCRBS Power Optimization (Flight Inspection Aircraft Required) is accomplished to reduce over-interrogation, over-suppression, fruit, and false targets caused by reflections. Optimum ATCRBS power must be the *minimum* ATCRBS power to meet operational requirements.

(1) AFIS/ Equipment Setup

(a) Flight Inspection Transponder settings:
Lo-Power Select: Off
Flt Insp Select: On

(b) Enter the Lat/ Long of the RADAR antenna in AFIS VOR mode to generate arc data.

(2) Maneuvering

(a) Position the aircraft to fly an arc in the vicinity of the vertical coverage radial or mutually agreed to reference radial at maximum distance.

(b) The aircraft altitude will be 10,000 ft for ASR(s) and 30,000 ft for ARSR(s), or as close to these altitudes as operational conditions allow.

(c) The beacon transmitter power must be adjusted to the minimum value that produces a usable beacon reply or target. During this check, ensure that aircraft does not shield the aircraft transponder antenna.

Figure 14-3
ATCRBS Power Optimization Flight Profile

	Aircraft Configuration		
A/C	**Speed KIAS**	**Flaps**	**Gear**
CL601/ 4	170- 320	UP	UP
Lear 60	170- 320	UP	UP
BE300	170- 200	UP	UP
HS125	170- 335	UP	UP

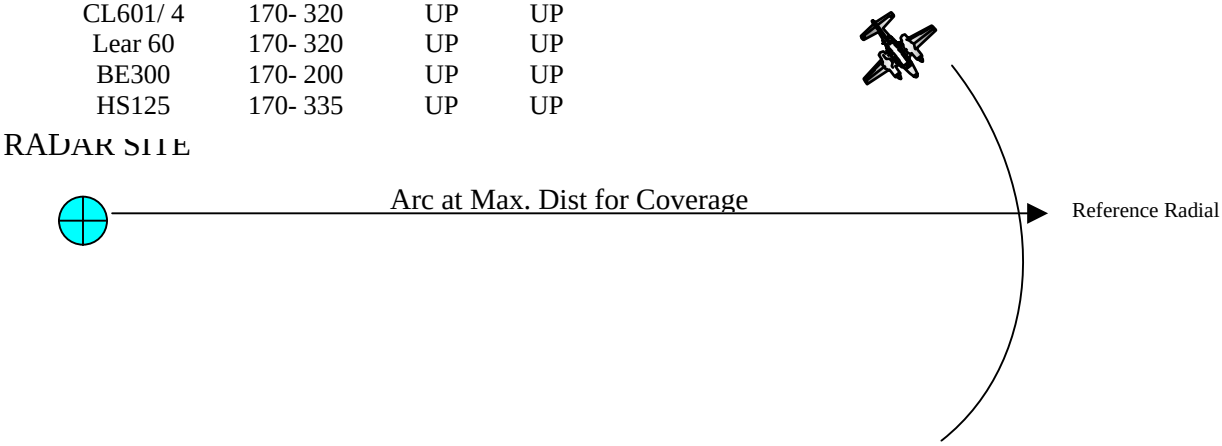

(3) Analysis. Facilities maintenance personnel must observe ATCRBS performance during the ATCRBS power optimization for a useable beacon reply.

> **NOTE:** Power optimization must be performed with a flight inspection aircraft following an increase in antenna tilt. Although this test may be accomplished during the vertical coverage check, any changes made in beacon power, as a result of this test, will invalidate any portion of the flight inspection checked previously.

g. Primary Radar Optimization is performed to aid in maximizing the radar's potential. Adjustments in Sensitivity Time Control (STC), beam gating, receiver sensitivity, pulse width, etc., may improve a radar's performance.

(1) AFIS / Equipment Setup: None

(2) Maneuvering. Facilities maintenance personnel will provide a detailed flight profile and observe the target display while adjusting the radar, as necessary. (See Supplemental section).

(3) Analysis. Facilities maintenance personnel will observe the target display and adjust the radar as necessary.

h. Side-Lobe Suppression (SLS). Sets transmitter power levels in the beacon SLS or ISLS antenna elements. The use of SLS/ ISLS improves beacon performance, reducing or eliminating ring-around caused by the side lobes of the antenna pattern. ISLS also reduces false targets that are normally caused by close, vertical reflecting surfaces. This check may be accomplished using targets of opportunity or flight inspection aircraft. Facilities maintenance personnel must select azimuths to be checked in areas where side lobe problems have occurred in the past.

(1) AFIS/ Equipment Setup. Flight Inspection Transponder settings:
Lo-Power Select: Off
Flt Insp Select: On

(2) Maneuvering. Fly the selected radials at 1,000 ft above the radar site elevation to the coverage limits (normally line-of-sight).

(3) Analysis. Maintenance personnel must adjust the SLS or ISLS power levels while observing beacon inner-range coverage. The power levels must be adjusted for minimum ring-around and false target returns. After making final adjustments, ensure that inner range coverage is still satisfactory.

i. ATCRBS Modes and Codes. Verifies the proper decoding of ATCRBS reply pulses. Facilities maintenance personnel must ensure that all modes and codes are verified by equipment test procedures before requesting flight inspection. Codes 7500, 7600, and 7700 should not be used due to the possibility of alarming other facilities.

(1) AFIS/ Equipment Setup. Flight Inspection Transponder settings:
Lo-Power Select: Off
Flt Insp Select: On

(2) Maneuvering. Fly profiles or in areas as requested by maintenance personnel.

(3) Analysis. Maintenance personnel will monitor the flight inspection aircraft transponder replies or targets-of-opportunity throughout the vertical coverage, airway, route, and terminal checks to verify correct altitude readout.

NOTE: During these tests, facilities maintenance personnel may request the flight inspection aircraft use different modes or codes to sample various modes and code trains.

j. ATCRBS Gain Time Control (GTC)/ Sensitivity Time Control (STC) is conducted to evaluate the GTC/ STC setting. It must be adjusted prior to the flight inspection and confirmed during the vertical and airway/route coverage checks. GTC/ STC reduces the interrogator receiver gain, as the range to the station reduces, thereby reducing ring-around and false targets.

(1) AFIS/ Equipment Setup

(a) Flight Inspection Transponder settings:
Lo-Power Select: On
Flt Insp Select: On

(b) Enter Lat/ Long of Facility in AFIS to fly Reference Radial.

(2) Maneuvering

(a) Position the aircraft on the vertical coverage radial or mutually agreed to reference radial.

(b) Either inbound or outbound.

(c) At 10,000 feet AGL for ASR(s) and at 30,000 ft AGL for ARSR(s) or as close to these altitudes as operational conditions allow.

(3) Analysis. Facilities maintenance personnel must examine the received beacon signal during the entire radial (fringe to fringe). Maintenance personnel must observe the display for minimum false ATCRBS targets or ring-around. A fairly constant signal level over the entire radial indicates correct GTC/ STC setting.

Note: Checks may be accomplished by software analysis using targets of opportunity or radar data acquisition subsystems (RDAS).

k. Vertical Coverage. Determines and documents the coverage in the vertical plane of the primary and ATCRBS antenna patterns. Evaluates the inner and outer fringes on all primary and secondary radars.

(1) AFIS/ Equipment Setup

(a) Flight Inspection Transponder settings:

(Below 15,000' MSL)	(Above 15,000' MSL)
Lo-Power Select: On	Lo-Power Select: Off
Flt Insp Select: On	Flt Insp Select: On

(b) Enter the Lat/ Long of the RADAR antenna in AFIS VOR mode to display reference radial data.

(2) Maneuvering. Choose an azimuth from the radar antenna or coincident VOR/ TACAN radial from the radar antenna which is free of clutter, dense traffic, heavy population areas, and interference created by line-of-site obstructions. (Conduct the commissioning inspection and all subsequent inspections concerning facility performance, on the same azimuth). Should an ASR or ARSR require commissioning, use the following flight patterns at standard cruise speeds. Coordinate maneuvers with Maintenance and Air Traffic prior to flight.

Antenna Polarization	Circular
Diplex Systems	Simplex mode
Integrators/ Enhancers	OFF
Magnetron/ Amplitron Systems	Amplitron (See Note 1)
Video Processor (military mobile radar)	OFF
ASR-9 Display Video	Uncorrelated
ARSR-3	
Target Threshold	91
MTI: I & Q	"I"

Have Facilities Maintenance personnel determine the lowest usable radar configuration. Suggested configurations are as follows:

> **Note:** At the request of engineering, conduct an additional vertical coverage check for the ARSR 1 & 2 with the Amplitron OFF. It is not necessary to conduct the entire vertical coverage; only a spot-check of altitudes and ranges, as specified by the engineer.

(a) Commissioning Vertical Coverage Profile, ASR/ ATCRBS

Figure 14-4
Commissioning Vertical Coverage Profile, ASR/ ATCRBS

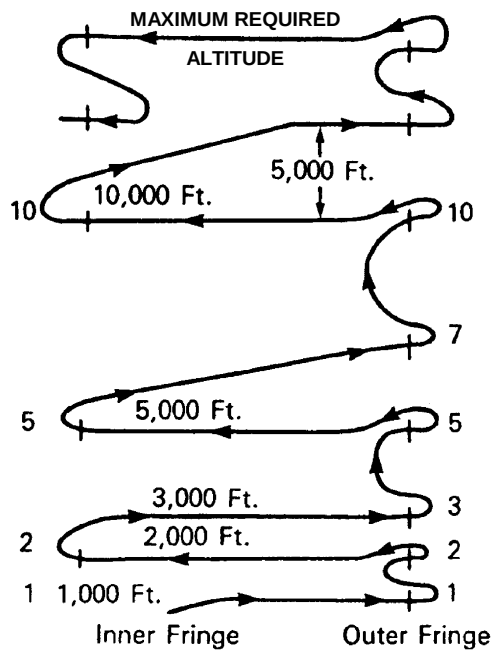

1 Determine the inner fringe at 1,000 ft. Then fly outbound at 1,000 ft and establish the outer fringe.

2 Climb to 2,000 ft and establish the outer fringe. Then proceed inbound at 2,000 ft and establish the inner fringe.

3 Climb to 3,000 ft and establish the outer fringe.

4 Climb to 5,000 ft and establish the outer fringe.

5 Repeat the outer fringe check at 5,000 ft (or lower if necessary) to evaluate radar auxiliary functions such as linear polarization, pin diode, integrators, etc., on the primary and GTC/STC on the secondary radar. Linear polarization normally increases the usable distance, so this check should be performed at an altitude where the change can be observed. Most auxiliary functions produce a decrease in receiver sensitivity, thereby decreasing the usable distance. Conduct these tests by establishing the outer fringe with the function on, and then off, and noting the difference in usable distance.

6 Return the equipment to its original inspection configuration and proceed inbound at 5,000 ft and establish the inner fringe.

7 Climb to 7,000 ft and establish the outer fringe.

8 Climb to 10,000 ft and establish the outer fringe. Then proceed inbound at 10,000 ft and establish the inner fringe.

9 If the maximum required altitude is greater than 10,000 ft, check the outer fringe in 5,000-foot increments up to the maximum required altitude; e.g., if 17,000 ft, check the outer fringe at 15,000 and 17,000 ft, then proceed inbound at the maximum required altitude and establish the inner fringe. If satisfactory radar coverage is not maintained during this inbound run, conduct additional flights through the vertical coverage pattern and establish the maximum usable altitude.

10 Check the inner fringe at the altitudes used to establish the outer fringe stepping down in altitude to the 10,000-foot level.

NOTE: If the maximum required altitude is 10,000 ft or lower, do not inspect vertical coverage above this altitude unless requested.

(b) Commissioning Vertical Coverage Profile, ARSR/ ATCRBS

Figure 14-5
Commissioning Vertical Coverage Profile, ARSR/ ATCRBS

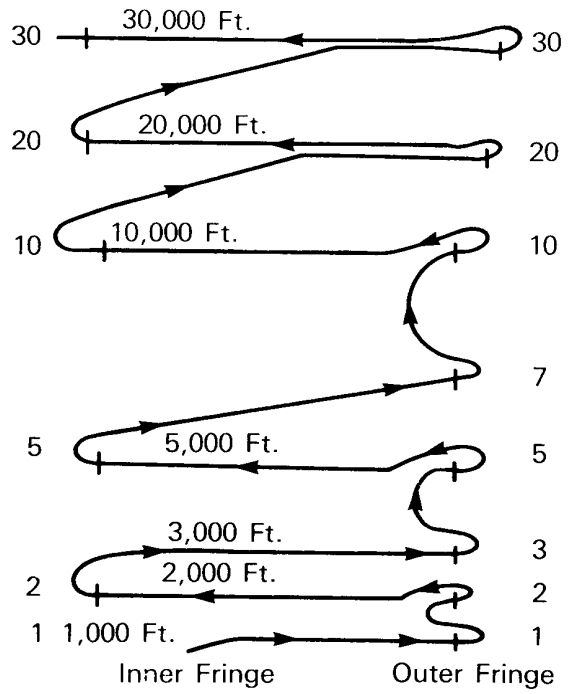

1 Complete steps (1) through (10) of the ASR commissioning requirements.

2 Climb to 20,000 ft and establish the outer fringe. Then proceed inbound at 20,000 ft and establish the inner fringe.

3 Climb to 30,000 ft and establish the outer fringe.

4 Repeat the outer fringe as required conducting auxiliary functions tests.

5 Then proceed inbound at 30,000 ft and establish the inner fringe.

If operational or engineering requirements are greater than 30,000 ft or 30,000 ft conflicts with air traffic, climb to a mutually agreeable altitude and establish the outer and inner fringes.

6 **Analysis.** When using flight inspection aircraft to verify questionable accuracy, determine the outer fringe coverage by evaluating tail-on targets and the inner fringe coverage by nose-on targets. Ask maintenance for the vertical coverage azimuth and maximum required altitude. Use map checkpoints, a NAVAID radial, AFIS, or radar vectors to remain on the vertical coverage azimuth. Fly all pattern altitudes as height above the radar antenna.

(c) Commissioning Military BRITE/ DBRITE Display. Inspect an ASR, which has the sole function of providing a video source for a BRITE/ DBRITE display, to operational requirements or 4,000 ft or 10 miles, whichever is greater.

1 **AFIS/ Equipment Setup**

a Fight Inspection Transponder settings:
(Below 15,000' MSL)
Lo-Power Select: On
Flt Insp Select: On

b Enter the Lat/vLong of the RADAR antenna in AFIS VOR mode to display reference radial data.

2 **Maneuvering.** Determine the inner and outer fringes at every 1,000-foot level up to 4,000 ft or the operational altitude.

3 **Analysis.** No comparative equipment auxiliary function configuration checks are required. Target definition will be from the BRITE display.

(d) Primary Radar Antenna Change. When the primary ASR or ARSR antenna is changed, fly the appropriate vertical coverage profile depicted below.

Figure 14-6
ASR- Terminal Radar Profile

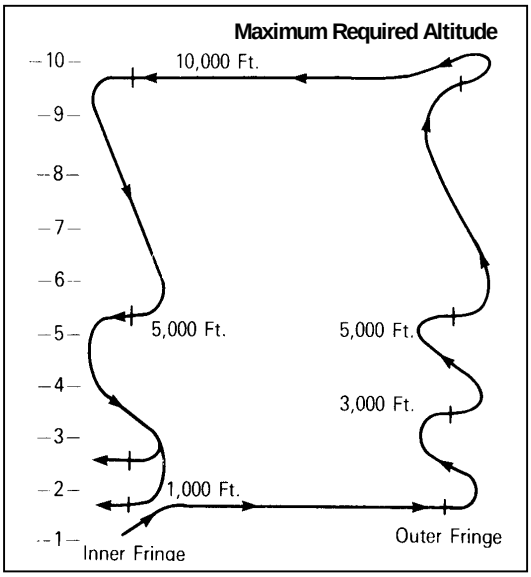

Figure 14-7
ARSR- En Route Radar Profile

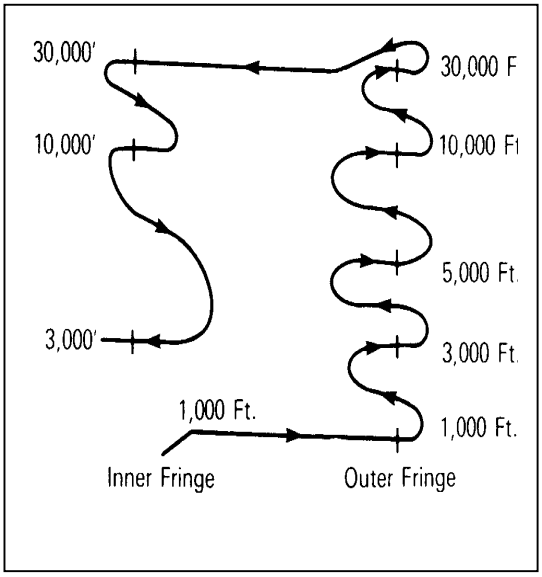

1 Maneuvering:

a After determining the outer fringe at 5,000 ft, repeat the outer fringe check, as required, to evaluate auxiliary functions if requested by maintenance.

b Conduct the remainder of the coverage check in the original configuration.

c Checks of additional facility equipment configurations and altitudes will be at the option of maintenance.

(e) ATCRBS Antenna Change. When replacing the antenna with the same type, all inspection requirements may be completed using targets-of-opportunity. When the antenna is replaced with a different type, checklist requirements must be completed using a flight inspection aircraft as required by the checklist.

Figure 14-8
ATCRBS Antenna Change Profile

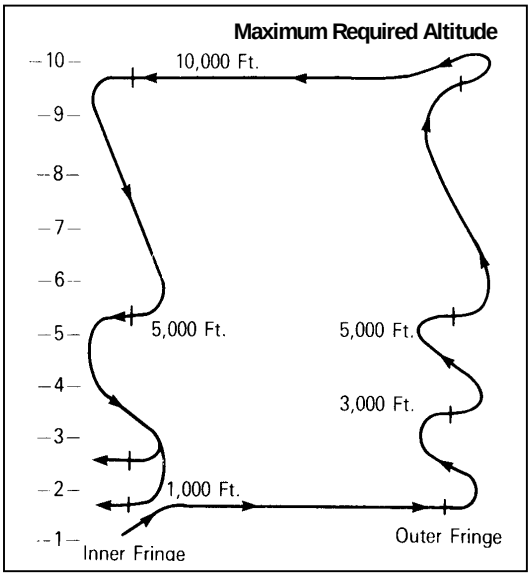

1 Maneuvering. The profile is the same as Commissioning Vertical Coverage Profile, **ARSR/ ATCRBS,** above.

2 Analysis. Maintenance will record target strength on each scan, aircraft position every five miles, and aircraft altitude for each fringe check and level run and will document results of the vertical coverage check using analysis/ diagnostic programs (RDAS tools), when available, for inclusion in the facility report.

l. Horizontal Screening is accomplished to verify the indicated coverage on the horizontal screening charts. This test is optional, depending upon operational requirements and ground evaluation tools available. After reviewing the results of the vertical coverage check and other data, engineering personnel will determine if the horizontal coverage check is required.

(1) AFIS/ Equipment Setup

(a) Flight Inspection Transponder settings:

Lo-Power Select: Off
Flt Insp Select: On

(b) AFIS, DME, or vectors provided by the controller may be used to maintain the orbit.

(2) Maneuvering. Fly an orbit at an altitude and distance that corresponds to the lowest screening angle at which coverage is expected. Do not use an orbit radius of less than ten miles.

NOTE: MTI, if used, should be gated to a range inside the orbit radius, except where ground clutter obscures the targets unless MTI is used. If MTI is gated outside of the orbit, the radius of the orbit must be constantly changed to avoid target cancellation due to tangential blind speed. For example, vary the distance on a 12-mile orbit between 10 and 14 miles, flying oblique straight courses between the 10-mile and 14-mile orbits, so as to average a 12-mile orbital distance. (See Figure 14-1)

The blind speed formula is as follows: V=291(PRF)/F

Where:

V= Groundspeed (knots)
PRF= Pulse Repetition Frequency (pulses/sec)
F= Transmitter Frequency (MHz)

Figure 14-9
Horizontal Screening Flight Profile

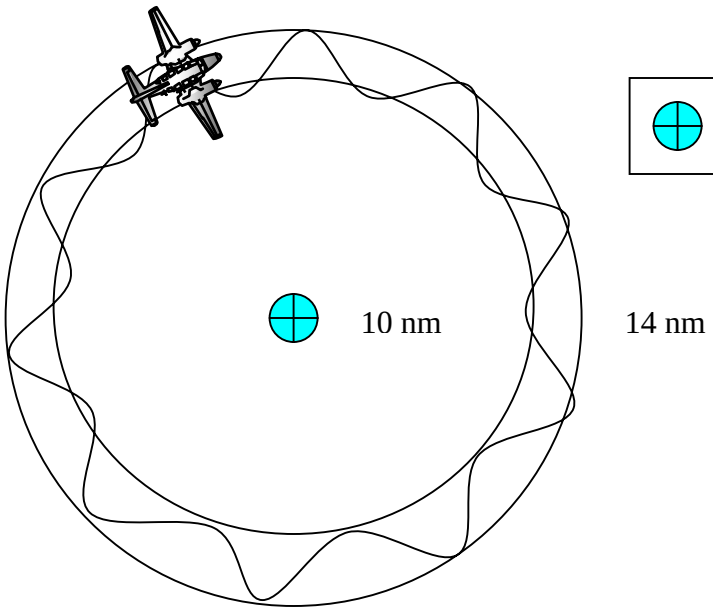

Aircraft Configuration

A/C	Speed KIAS	Flaps	Gear
CL601/ 4	180- 250	UP	UP
Lear 60	180- 250	UP	UP
BE300	180- 200	UP	UP
HS125	180- 250	UP	UP

(3) Analysis. Facilities Maintenance personnel must record target strength, azimuth and distance every scan. They must determine if the coverage supports operational requirements.

m. Airway/Route Coverage. Maintenance personnel must determine the extent of these evaluations, which determine the overall radar facility coverage and document coverage along routes and airways. Areas of intense clutter, poor target returns, or other potential problems identified in the inspection plan may be further evaluated to determine actual facility coverage. This check must be accomplished using targets-of-opportunity with the ***final commissioning check*** done with a flight inspection aircraft.

(1) AFIS / Equipment Setup. Flight Inspection Transponder settings:
Lo-Power Select: Off
Flt Insp Select: On

(2) Maneuvering. Configure the primary radar in "circular polarization". Fly the minimum altitude (not lower than MOCA) on airway centerline to determine at which altitudes satisfactory radar coverage exists. Fly terminal arrival and departure routes and other areas of interest at MOCA. Maintain course guidance by reference to AFIS, ground checkpoints, NAVAID signals, or radar vectors.

(3) Analysis. Coverage verification using linear polarization may be checked at the discretion of the test engineer or, if a joint use site, by the DOD agency.

n. Fix/ Map Accuracy. Used to verify all airways, routes, fixes, and runway centerlines on the video map display. Replacement map overlays, video maps, or digitally generated maps do not require a flight inspection if maintenance can determine, using targets-of-opportunity, that the new map is accurate.

(1) AFIS/ Equipment Setup. Flight Inspection Transponder settings:
Lo-Power Select: Off
Flt Insp Select: On

(2) Maneuvering. Fly the minimum altitude where satisfactory radar coverage exists using NAVAID guidance, ground checkpoints, or AFIS to identify the airway, route, or fix.

(3) Analysis. Maintenance personnel will compare reported aircraft position relative to the airway, route, or fix with the video map presentation. Similarly, verify runway centerline to video map alignment by observing landing and departing aircraft.

o. Fixed Target Identification is accomplished to identify prominent, primary broadband targets used for range and azimuth accuracy checks when they cannot be identified by other means. This check may be accomplished using targets-of-opportunity or flight inspection aircraft.

(1) AFIS/ Equipment Setup. Flight Inspection Transponder settings:
Lo-Power Select: Off
Flt Insp Select: On

(2) Maneuvering. Maintenance will select identifiable features from a comparison of the ground clutter return and geographic maps (islands, mountain peaks, towers, etc.). They should direct the pilot to the PE return. If the pilot can identify and describe the ground target, and the target is a permanent feature, record the PE in the inspection report.

p. Surveillance Approaches. All ASR approaches must be checked for accuracy and coverage by a flight inspection aircraft during commissioning inspections or any time a new approach procedure is developed. ASR approaches must also be checked on a periodic basis. Surveillance approaches must be evaluated using surveillance type radarscopes. Conducting an ASR approach on a PAR display <u>is not</u> acceptable for flight inspection purposes. ASR approaches are not authorized using ATCRBS only, and the ATCRBS display should be offset**.**

(1) AFIS/ Equipment Setup. Flight Inspection Transponder settings:
Lo-Power Select: Off
Flt Insp Select: On

(2) Maneuvering

(a) Approach to a Runway. Fly a standard approach in the appropriate configuration and airspeed. Adhere to the final controllers instruction as stated. The approach course must coincide with the runway centerline extended and must meet accuracy and coverage tolerances.

(b) Approach to an Airport. Fly a standard approach in the appropriate configuration and airspeed. Adhere to the final controllers instruction as stated. The approach course must be aligned ***to the MAP*** as determined by procedures and maintenance personnel.

Helicopter-only final approach courses may be established to a MAP no farther than 2,600 ft from the center of the landing area.

For both approaches, the controller must provide vectors for a 10-mile ASR final approach. The flight inspector must fly at MVA until reaching the final approach segment. Prior to the final segment, compare published minimum descent altitude (MDA) with MDA provided by the air traffic controller. The final approach segment must be flown flying headings as provided by the air traffic controller. Descend to the minimum descent altitude and verify recommended altitudes on final.

(3) Analysis. While inbound, evaluate the approach procedure, obstacles, approach/ runway lights, aircraft position relative to the runway centerline extended/ airport, and if a landing can be made without excessive maneuvering.

q. Minimum Safe Altitude Warning (MSAW)/ General Terrain Map (GTM) Validation. Confirm radar identification and MSAW check in progress with the air traffic controller. Perform all checks in Normal/ Normal transponder setting on an MSAW **uninhibited** beacon code.

(1) AFIS/ Equipment Setup. Flight Inspection Transponder settings:
Lo-Power Select: Off
Flt Insp Select: Off

(2) Maneuvering

(a) Approach Path Monitor (APM): Between the initial point 5 nm prior to approach end of the runway (AER) or FAF, whichever is first, and the APM cut-off point, descend below the normal approach path into the approach path monitor area. MSAW will alert at or prior to the monitored area, depending on rate of descent. The APM cut-off point will be 1 – 2 nm prior to AER. For a circling only SIAP, the APM starts at 5 nm (or FAF) from the closest landing surface, and terminates 1 – 2 nm from the closest landing surface.

(b) General Terrain Map (GTM): Within 55 nm of the ASR, descend from MVA at a safe but accelerated rate of descent. Depending on rate of descent, MSAW will alert at or prior to the assigned bin altitude. Perform the GTM check at least 10 nm from airports that have an APM. Ask the air traffic controller to verify that the MSAW alerted properly.

NOTE: Consult the MSAW data sheet to ensure that the IFF code in use is not inhibited. The MSAW data sheet will also provide the exact dimensions of the APM alert area. Annotate on the DFL, Block 58 (Facility Status and Progress), and any alert APM/ GTM failure. Include location (e.g., JFK R-190/35, I-LAX ILS RWY 25L APM), transponder beacon code, and UTC time.

Most air traffic controllers are unfamiliar with the terms APM or GTM. Simply refer to these checks as "Low Altitude Alert tests" or simply "MSAW Check".

r. Probing. Missed targets can be caused by antenna lobing, line-of-sight, aircraft altitude, or antenna tilt. Therefore, isolated or non-recurring target misses are to be expected. If three or more consecutive misses are experienced, determine if a hole exists in the radiation pattern and determine its size. If holes or poor coverage are discovered, they must be evaluated to determine the effect on the operational requirements. Holes in radar coverage are probed in a manner similar to VOR or TACAN techniques.

(1) Maneuvering. The following procedure may be used as a guide:

(a) Horizontal. Fly through the area of the suspected hole to determine the inner and outer boundaries. Vary the aircraft position every 10° of radar azimuth until the lateral limits are established.

Figure 14-10
Horizontal Probing

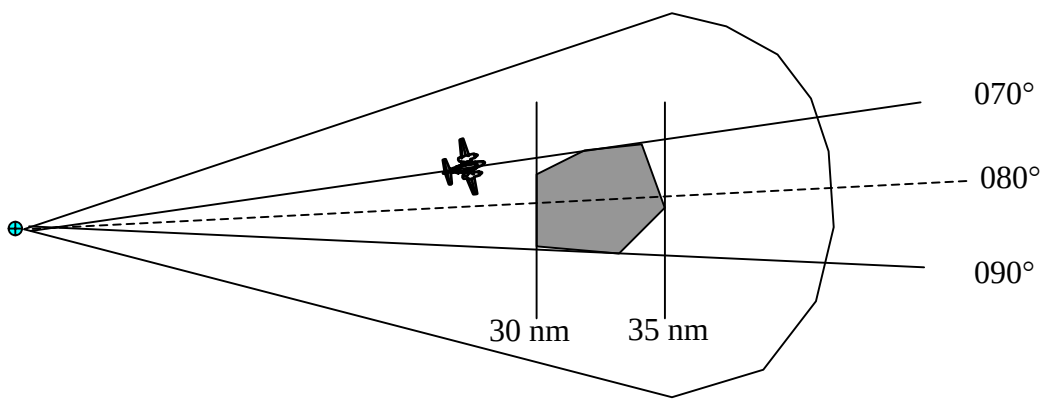

Aircraft Configuration

A/C	Speed KIAS	Flaps	Gear
CL601/ 4	180- 250	UP	UP
Lear 60	180- 250	UP	UP
BE300	180- 200	UP	UP
HS125	180- 250	UP	UP

(b) Vertical. Fly through the center of the pattern established in the horizontal probing procedure at 1,000-foot increments to determine the upper and lower limits of the hole.

Figure 14-11
Vertical Probing

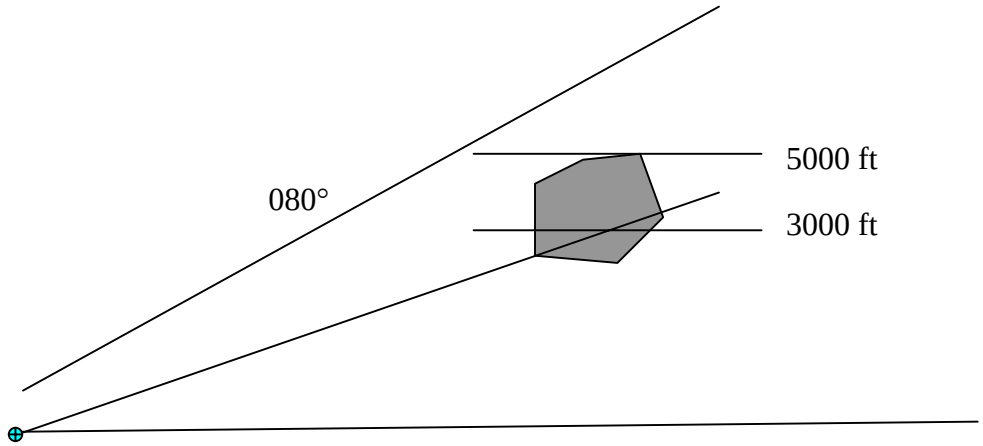

14.13 TABLES/ SUPPLEMENTAL INFORMATION

Sample Flight Inspection Plan for Tyndall AFB, Florida
AN/ GPN-20 ASR—Special (MR)

SITE INFORMATION	**Tyndall AFB FL (Panama City) KPAM**
Site Latitude	30° 04’ 06.9” N (WGS-84)
Site Longitude	85° 33’ 35.1” W (WGS-84)
Site Elevation	6.60 ft MSL
Airspace	Surface – FL230
Required Radar Coverage	60 nm
Estimated Flight Time	4 Hours
EQUIPMENT SETTINGS	
Equipment Type	AN/GPN-20 (ASR-8)
ASR Bore-sight Elevation	74.40 Feet MSL (67.80 ft AGL)
PSR Antenna Tilt	1.8° (electrical)
SSR Bore-sight Elevation	82.40 ft MSL (75.80 ft AGL)
SSR Antenna Tilt	0.0° (mechanical)
Antenna Speed (RPM)	16.27
Channel	B
Polarization	Circular
Features	STC, GTC on
Magnetic Variation	0.0°
TRANSPONDER POWER SETTINGS	
Below 15,000	ON (Low Power Selected)
Above 15,000	OFF (Normal Power Selected)
TRANSPONDER FLIGHT INSPECTION SELECT	Should be ON for all checks except MSAW (GTM/ APM)

1. Standby power and equipment verified as part of pre-inspection checks.
2. Beacon power and primary radar optimization accomplished using targets of opportunity.
3. Tilt determination accomplished using targets of opportunity.
4. Orientation verified by ground checks using permanent echoes and solar analysis.
5. Vertical coverage will be established by flight inspection using procedures below.

Side lobe suppression (SLS/ISLS) will be set prior to flight inspection and checked during vertical coverage.

GTC/ STC will be adjusted prior to flight inspection and confirmed during vertical coverage check.

6. MSAW (GTM) is available.

SURVEILLANCE APPROACHES: None

VERTICAL PROFILE – 060 Radial (See Figure 14-12)

LEG	Altitude (ft MSL)	Heading (0.0° mag var)	Estimated coverage (nm)
Start altitude outbound (outer fringe)	1,000	60	0.5
Outbound (outer fringe)	3,000	60	45
Outbound (outer fringe)	5,000	60	50
Outbound (outer fringe)	10,000	60	60
Inbound (inner fringe)	10,000	240	3
Outbound (outer fringe)	FL 200	60	60
Outbound (outer fringe)	FL 250	60	60
Inbound (inner fringe)	FL 250	240	7
Inbound (inner fringe)	FL 200	240	5
Inbound (inner fringe)	5,000	240	1
Inbound (inner fringe)	3,000	240	1

Figure 14-12

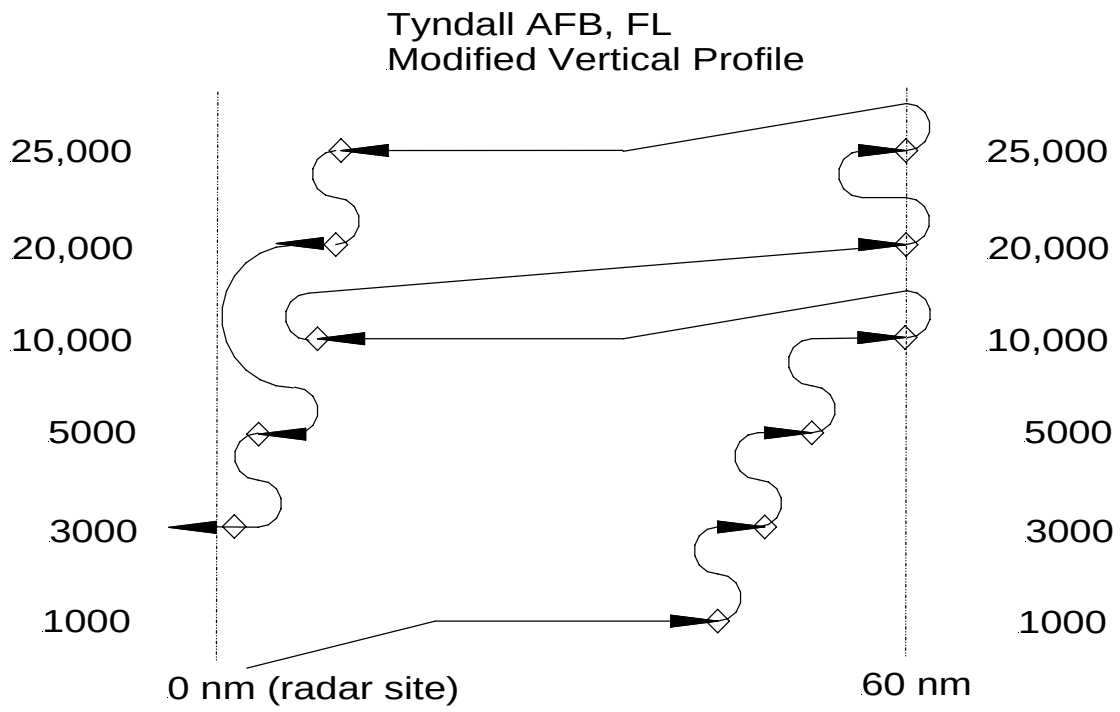

HORIZONTAL PROFILE (Screening Evaluation)

Leg	From	To	Alt: (ft MSL)
1-	90°/52 DME	28°/45 DME	5000
2	28°/45 DME	350°/40 DME	5000
3	350°/40 DME	290°/20 DME	5000

Figure 14-13
Horizontal Profile for Screening Evaluation

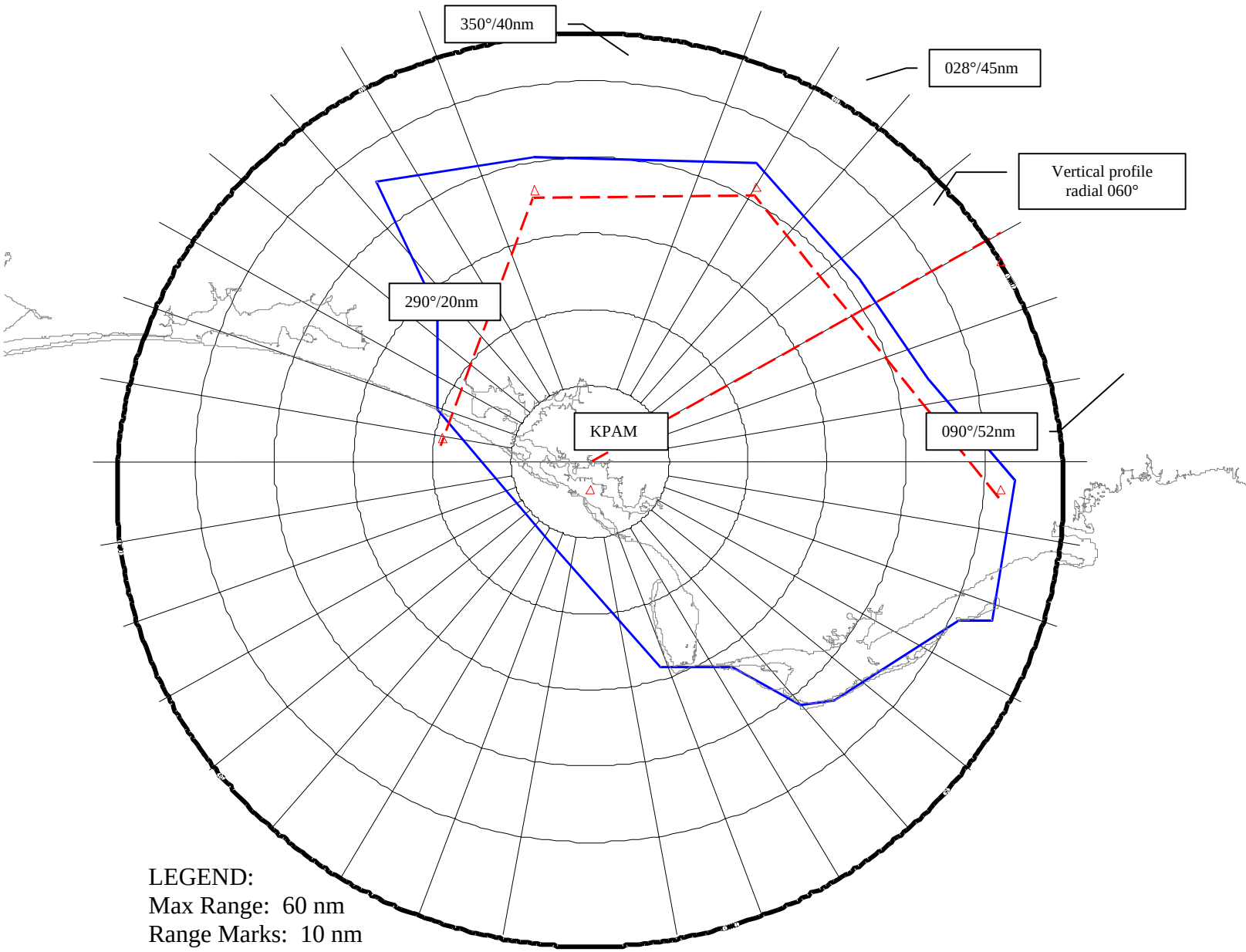

LEGEND:
Max Range: 60 nm
Range Marks: 10 nm
Azimuth Marks: 10 deg
Orientation: True north
———— line is Tyndall airspace
– – – – – – line is flight profile

Below is a picture of what a Radarscope may look like:

Figure 14-14
ARTS II Radar Scope with Alphanumeric Data

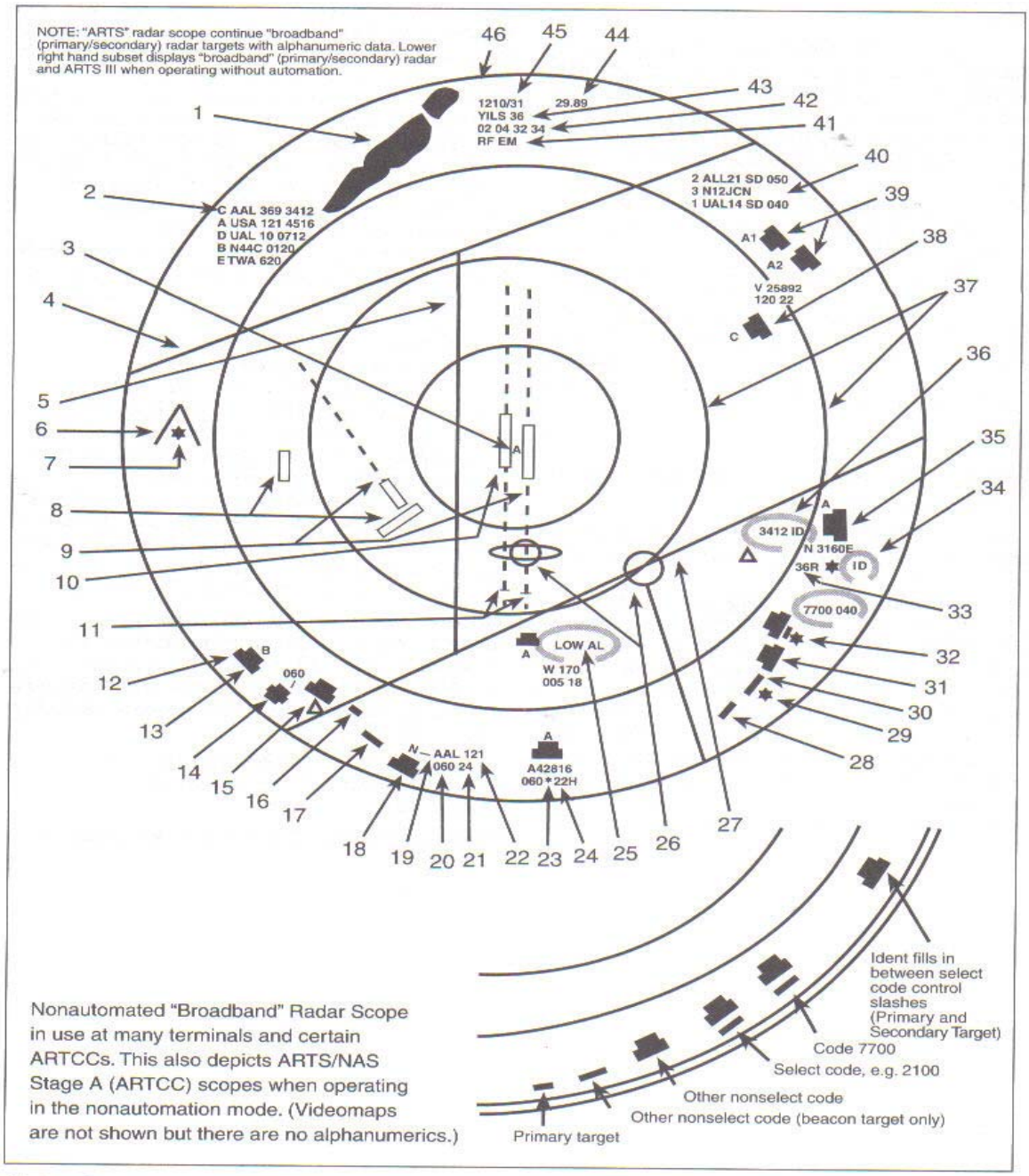

Note: *A number of radar terminals do not have ARTS equipment. Those facilities and certain ARTCCs outside the contiguous U.S. would have radar displays similar to the lower right hand subset. ARTS facilities and NAS Stage A ARTCCs, when operating in the nonautomation mode, would also have similar displays and certain services based on automation may not be available.*

SECTION 2. PRECISION APPROACH RADAR (PAR)

14.20 INTRODUCTION

a. General. The Precision Approach Radar (PAR) is designed to provide an approach path for precise alignment and descent guidance to an aircraft on final approach to a specific runway through interpretation and oral instructions of a ground based controller.

b. Characteristics. PAR(s) provide a very high degree of resolution in terms of range, azimuth and elevation by radiating a narrow pulse and beam width along a predetermined descent path for an approximate range of 10 to 20 miles, and covers a sector of 20° in azimuth and up to 15° in elevation.

Figure 14-15
Service Volume of Typical Precision Approach Radars

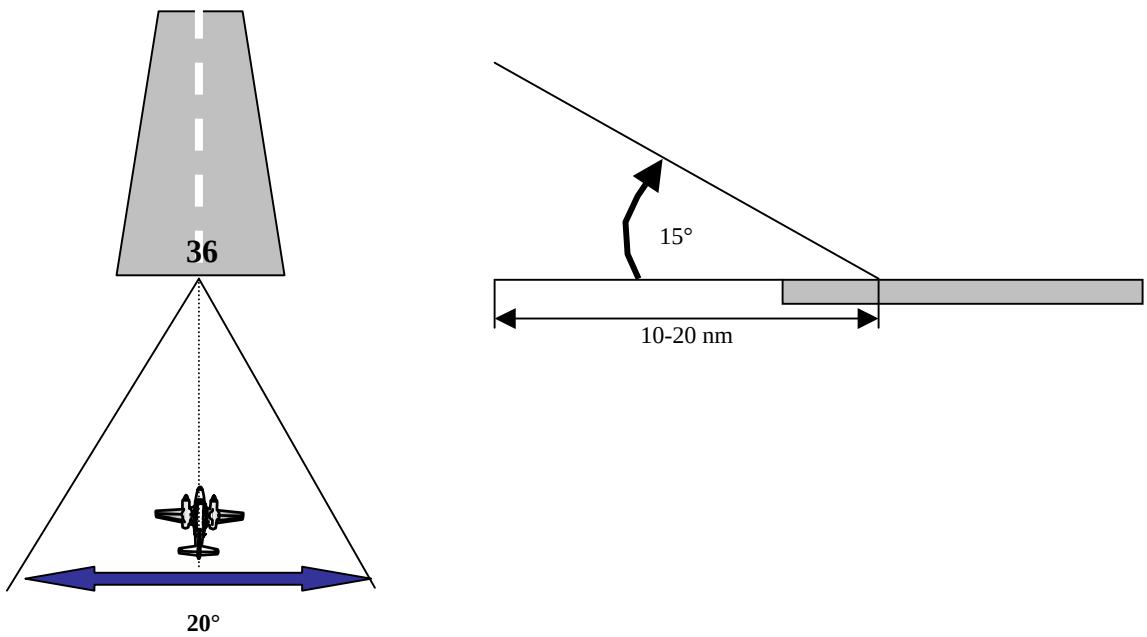

Target information is displayed on an azimuth and elevation display. The displays must provide accurate information regarding an aircraft's range, azimuth, and elevation angle.

Figure 14-16
Target Information Azimuth and Elevation Display

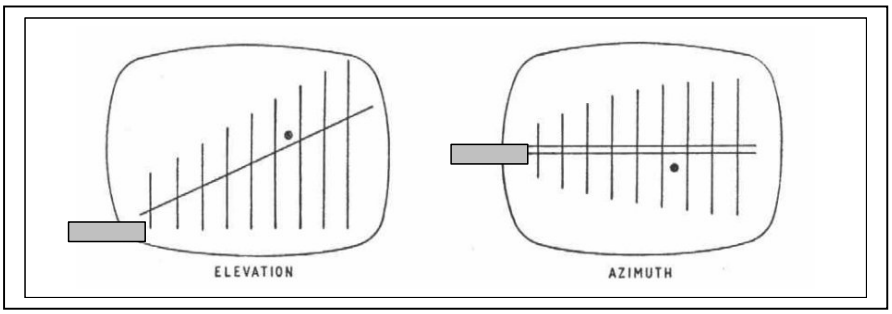

The flight inspection procedure for a PAR is divided into three parts--azimuth radar, elevation radar, overall system and controller performance (includes feature comparisons). Normally, all parts are inspected during each run. The basic method for checking a PAR is to have the controller vector the aircraft and provide guidance instructions to the flight inspector for evaluation of the facility and controller performance.

Normally, 2 runs per runway will be required. The first will be an "A" cursor run on the facility. This is the normal mode of operation and should produce a normal approach. The second, or "B" cursor run, is based upon the lower safe limit for the applicable approach and will fall within the tolerances and requirements of the FAA Orders 8200 series. For generic PAR(s), if A cursor is flight inspected on one channel, the corresponding B cursor on the same channel must be evaluated.

Coincidence of the azimuths and glide paths of the PAR and ILS/ MLS/ VGSI is essential to preclude pilot confusion from different indications of the ILS/ MLS/ VGSI and PAR. Monitor the PAR approach using the ILS/ MLS/ VGSI for reference. Coincidence probably will not be maintained from Point "B" to touchdown due to the characteristics of the ILS glide slope inside Point "B." Areas of non-coincidence of the azimuths and glide paths should be noted.

The Flight Inspector is responsible for determining that the PAR conforms to the specified tolerances. Any discrepancies found which could be attributable to controller technique should be brought to the attention of the ground supervisory personnel.

c. Classifications

(1) Generic PAR (FPN-40, FPN-62/ 63, MPN-14, TPN-18, TPN-44). This family of radars is characterized by mechanically scanned (moving) azimuth and elevation antennas. Displayed targets are not computer enhanced. The PAR may be part of a larger system containing an ASR.

(2) GPN-22 andTPN-25. These radars, which differ only in physical configuration and associated equipment, have an electrically scanned (non-moving) antenna. Displayed targets are computer generated. The system uses circular polarization only. The system consists of dual transmitters and dual receivers/ processors with EPROM cards. In normal use, selection of these units is automatic; for flight inspection, they must be manually selected at the radar site. Normal coverage is 20 nm.

(3) TPN-22. The AN/ TPN-22 Precision Approach Radar (PAR) is a transportable, computerized, pencil beam, 3-dimensional radar. The system is a track-while-scan radar. The radar uses phase and frequency scanning techniques with an electronically steered beam antenna array. The system uses circular polarization only. The system has additional capabilities requiring interface with specialized aircraft equipment; these features are not subject to flight inspection.

(4) MPN-25, TPN-31, FPN-67 (U.S. Army), GCA-2000. The MPN-25 (USAF)/ GCA 2000 PAR produces computer-generated targets but has no special inspection requirements. It does not have conventional MTI capability. The system does not have controllable antenna polarization but has RAIN MODE that performs the same function as Circular Polarization (CP) and Clear Mode that performs the same function as Linear Polarization (LP).

14.21 FLIGHT INSPECTION PROCEDURES

a. Course Alignment and Coverage (Azimuth). The intent of inspecting a Precision Approach Radar is to ensure that the controller and equipment can guide an aircraft to the Runway Point of Intercept (RPI). The basic method for checking a PAR is to have the controller vector the aircraft and provide guidance instructions to the flight inspector for evaluation of the facility.

(1) AFIS/ Equipment Setup. The use of AFIS is the preferred method of inspection. The Mission Specialist should select PAR/ PAPI function and setup per TI 4040.55.

(2) Maneuvering. Alignment operations.

(3) Course Alignment (AFIS)

(a) Follow the course commands from controller and maneuver the aircraft within the standard service volume, (± 10° FAC and 10 –20 nm). Minimum distance for most PAR approaches will be 5nm.

Figure 14-17
PAR Approach Flight Profile

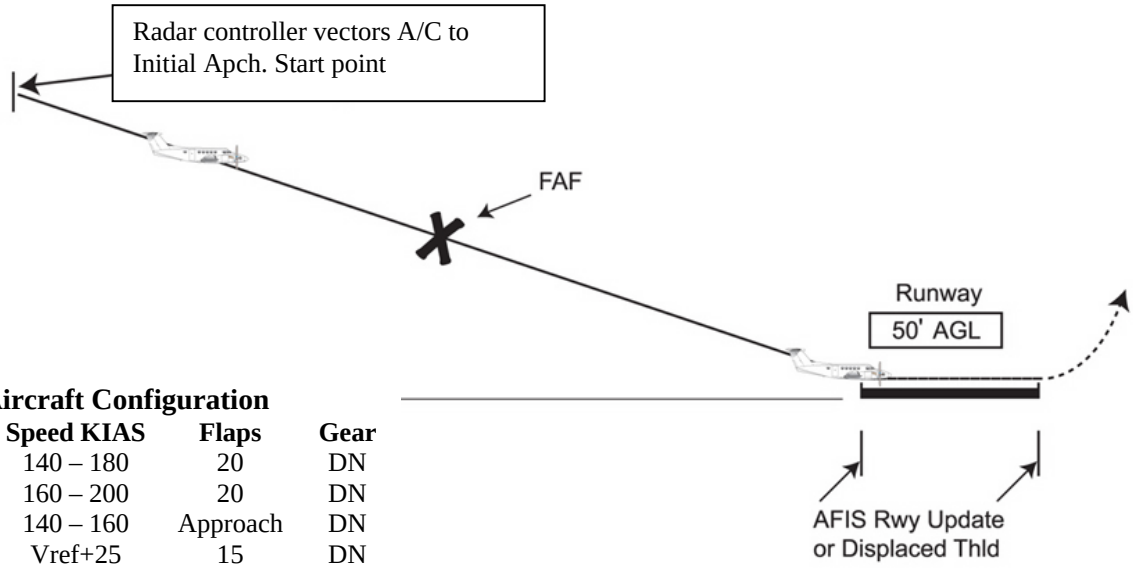

Aircraft Configuration

A/C	Speed KIAS	Flaps	Gear
CL601/ 4	140 – 180	20	DN
Lear 60	160 – 200	20	DN
BE300	140 – 160	Approach	DN
HS125	Vref+25	15	DN

NOTE: This is the basic profile for all PAR and ASR approaches described in this section. AFIS runway updates will be required on approaches when measuring angle or course alignment of PAR facilities.

(b) At each ON-PATH/ ON-COURSE call, the pilot not flying must press the LORAN button or have the Mission Specialist press the ON-PATH AFIS key. Range should be given every nautical mile. For the most accurate results, use events taken between 4-0.5nm from threshold.

(c) Execute normal go-around and return to beginning point while the controller changes configurations for next run.

(4) Analysis. Check final approach course for obstacles, VGSI, and localizer coincidence, as appropriate. Check is satisfactory if alignment is within 30 ft referenced to runway centerline at the threshold.

(5) Other Considerations. Ensure the alignment is satisfactory at runway threshold, (<30 ft from CL). Along track azimuth alignment at distances greater than threshold must be determined when AFIS measurement techniques are used (the greater of 30 ft or 0.6% of the aircraft to PAR antenna distance, referenced to runway centerline). Apply the along-track tolerance to the average of all on course calls. Discuss any singular along-track errors with Air Traffic and/or PAR maintenance personnel for resolution.

b. Course Alignment (Visual)

(1) Maneuvering

(a) Fly inbound at pattern/ intercept altitude from approximately 10 – 12 miles from the runway, on course, and on path.

(b) Descend at a normal glide path angle with the final controller furnishing information to enable the flight inspector to fly on the centerline azimuth.

(2) Analysis. The flight inspector will determine, by visual reference to the runway, if the centerline is straight and if it coincides with the runway extended centerline.

(3) Other Considerations. Ensure the alignment is satisfactory at runway threshold. Along-track azimuth alignment at distances greater than threshold must be determined when AFIS measurement techniques are used. Apply the along-track tolerance to the average of all on course calls. Discuss any singular along-track errors with Air Traffic and/or PAR maintenance personnel for resolution.

c. Azimuth Only Procedures (PAR). Some facilities have "AZ ONLY" or "PAR w/o GS" procedures published for use during outages of the elevation portion. Procedurally, the obstacle clearance area of the PAR is used and non-precision Required Obstacle Clearance (ROC) applied. An "AZ ONLY" approach may therefore have a lower MDA than an ASR approach to the same runway because the ASR runway obstacle clearance area is larger and may contain higher obstacles.

(1) AFIS/ Equipment Setup. The use of AFIS is the preferred method of inspection. The Mission Specialist should select the PAR/ PAPI function and setup per TI 4040.55.

(2) Maneuvering

(a) Maneuver the aircraft within the standard service volume. Execute approaches in normal flight inspection landing configuration.

(b) Maintain procedural altitude until the final segment.

(c) At the Final Approach Fix, descend at a rate of 400 ft per minute until 100 ft below MDA and maintain until threshold.

(d) At each ON-COURSE call, the pilot not flying must press the LORAN button or have the Mission Specialist press the ON-PATH AFIS key.

(3) Analysis. Check the final approach course for obstacles, radar coverage, and localizer coincidence, as appropriate.

d. Course Deviation Accuracy is used to determine when the controller notices an off course condition.

(1) AFIS/ Equipment Setup. None

(2) Maneuvering. While flying inbound on course, deviate to the left and right of centerline.

(3) Analysis. Pay attention how far the aircraft must move off centerline before the controller notices movement. The controller needs only to state, slightly left or right of course. Target presentation must be coincident with aircraft position.

e. Range Accuracy is used to check the accuracy of the range information, both video and fixed.

(1) AFIS/ Equipment Setup. Use DME or AFIS information, per TI 4040.55, as necessary. In areas where there are no ground checkpoints or good electronic means of accurately measuring distance from the field, this check may be omitted.

(2) Maneuvering. Fly over checkpoints such as the outer marker or VOR or any well-surveyed checkpoint, provided its distance from the field can be established.

(3) Analysis. The range accuracy is satisfactory if it is ± 2% of true range.

(4) Other Considerations. All ranges are measured in nautical miles from touchdown. Normally, two checkpoints, one at 5 to 10 miles and one at ½ mile, are sufficient for checking range accuracy. Range accuracy checks of azimuth and elevation radar normally will be made simultaneously.

> **Note:** Mileage information given by the radar operator should be the mileage from the touchdown point to the target aircraft. When erroneous mileage information appears to be given, the flight inspector should inquire if the range information obtained from the scope has been corrected to compensate for the distance from the antenna to the touchdown point.

f. Usable Distance is accomplished to check the usable distance or maximum range of the radar system.

(1) AFIS/ Equipment Setup. Use DME or AFIS information, per TI 4040.55, as necessary.

(2) Maneuvering

(a) Proceed inbound from the limit of radar coverage, 15 to 20 miles, during the course alignment check.

(b) Altitude should be at minimum vectoring altitude for that area.

(c) Have the controller give the mileage when the aircraft is first displayed on the scope.

(3) Analysis. Usable distance is satisfactory if it provides a minimum range of 7.5 nm from touchdown.

(4) Other Considerations. New radars have ranges of 15-20 miles, but because of small aircraft size, less coverage can be expected. Azimuth and elevation coverage can be inspected simultaneously. Coverage should be checked by alternately using normal and MTI radars. Periodic coverage checks need only be made in the area of operational use.

> **Note:** Mileage information given by the radar operator should be the mileage from the touchdown point to the target aircraft. In case erroneous mileage information is given, the flight inspector should inquire if the range information obtained from the scope has been corrected to compensate for the distance from the antenna to the touchdown point.

g. Lateral Coverage. Using the AFIS coverage angle capability in the PAR/ VGSI mode is the preferred method of checking the lateral limits of the radar signal.

(1) AFIS/ Equipment Setup. Load the AFIS Facility Data Page, per TI 4040.55.

(2) Maneuvering

(a) Fly in clean configuration at altitude and distance determined by maintenance and/or controller.

(b) If radar target is lost before reaching expected limit, reversing the arc may be required to define the limit at target acquisition.

(c) Fly the requested arc clockwise or counterclockwise, starting AFIS data collection outside of expected coverage limit.

(d) Press the "ON COURSE" key when the radar operator calls the first hit centerline and when radar reply is lost.

(3) Analysis. The check is satisfactory if the lateral coverage is ± 10 ° from procedural centerline.

h. Moving Target Indicator (MTI)/ Moving Target Detector (MTD) systems are used to identify moving targets and targets through ground clutter. Blind speeds for PAR systems are usually quite high due to the high pulse repetition frequency (PRF) required for good target definition. It may be quite difficult to perform an MTI/ MTD check with certain types of small aircraft due to speed limitations. This check can be omitted if the speed range required is impossible to attain. The check can be performed at a later date when a faster aircraft is available. An airspeed notch of as much as plus or minus 20 knots may exist around the computed blind speed.

(1) AFIS/ Equipment Setup. Load the AFIS Facility Data Page, per TI 4040.55.

(2) Maneuvering

(a) During commissioning, request Maintenance provide the pre-computed blind speed for the radar.

(b) Determine the airspeed that will give the required ground speed.

(c) Fly in-bound from approximately 10 miles (ensure that MTI is gated beyond 10 miles) on a normal azimuth and elevation in the landing configuration.

(d) Vary the air speed slightly above and below the previously computed airspeed.

(3) Analysis. Maintenance will note the speed range within which a reduction of target brilliance occurs. The use of the MTI/ MTD system must not cause loss of usable target at other than blind speed.

i. Glide Path Alignment is accomplished to determine the glide path angle and the straightness of the glide path centerline.

(1) AFIS/ Equipment Setup. Load the AFIS Facility Data Page, per TI 4040.55.

(2) Maneuvering

(a) Follow the controller's heading and altitude directions to maintain course and glide path.

(b) At each ON-PATH call, the pilot not flying must press the LORAN button or have the Mission Specialist press the ON-PATH AFIS key. For the most accurate results, use events taken between 4 - 0.5 nm from threshold.

(3) Analysis

(a) Commissioning: 0.1° of published angle

(b) Periodic: 0.2° of published angle

j. Lower Safe Limit Alignment is designed to allow clearance from all obstacles from Glide Slope Intercept (GSI) to runway threshold. The "B" cursor, lower safe limit, is normally set 0.5° below the "A" cursor, normal glide slope angle.

(1) AFIS/ Equipment Setup. Load the AFIS Facility Data Page, per TI 4040.55.

(2) Maneuvering

(a) Fly in-bound from 5 to 7 miles from the runway on the lower safe limit line and maintain "on-path" at the controller's direction in the approach configuration.

(b) Maintain "on path" position to the runway, or until it becomes obvious that a pull-up is necessary to avoid obstacles.

(c) Ensure the aircraft is clear all obstacles prior to passing the runway threshold.

Figure 14-18
Lower Safe Limit Flight Profile

Aircraft Configuration

A/C	Speed KIAS	Flaps	Gear
CL601/ 4	140- 180	20	DN
Lear 60	160 – 200	20	DN
BE300	140- 160	Approach	DN
HS125	Vref+25	15	DN

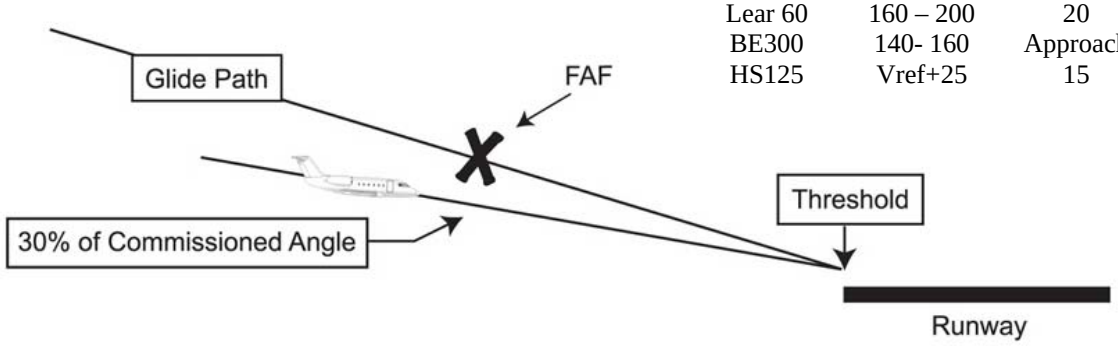

(3) Analysis. The Lower Safe Limit Angle is satisfactory if it provides clearance from all obstacles from the GSI to the threshold.

(4) Other Considerations. Scopes which do not have the lower safe limit line portrayed must be checked in the same manner as above. The controller will supply information to the flight inspector so that he can fly the lower safe limit altitudes (below which a missed approach would be necessary) and be clear of obstacles prior to passing the runway threshold.

k. Standby Equipment. For periodic inspections, review the previous report and attempt to perform the primary equipment checks on the equipment used as standby on the previous inspection.

(1) AFIS/ Equipment Setup. Same as Primary

(2) Maneuvering. Same as Primary

(3) Analysis. Same as Primary

14.22 TABLES/ SUPPLEMENTAL INFORMATION

QUESTIONS TO ASK CONTROLLER BY PHONE:

1. What type of transmitter? (Confirm data sheet)
2. Does the display have computer-generated targets?
3. What is the usable range?
4. Is a low power mode available?
5. Does the radar have two channels? (2 transmitters?)
6. Does the radar have linear/ circular polarization?
7. Does the radar have Sensitivity Time Control (STC)?
8. What are the options? (High/ low, etc)
9. Does the radar have Fast Time Constant (FTC)?
10. If the radar has computer-generated targets, are the following applicable?
    a. What type of database is used?
    b. How is the switching between primary and backup database accomplished
    c. Is non-coherent MTI available (i.e. rain reject?)
    d. Is automatic Acquisition available? (Alternative is scan only)
    e. Is backup track mode available? (Alternative is normal)
    f. Is clutter reject required for approaches?

For commissioning checks, Documentation inputs:
Transmitter power,
Receiver sensitivity in normal, coherent MTI, and
Non-coherent MTI
Database type, part #, serial #, version #
Digital MTI database limiting settings.
Usable radar range on 20 mile radar.

CHAPTER 15. INSTRUMENT LANDING SYSTEM (ILS)

TABLE OF CONTENTS

Paragraphs *Title* *Pages*

SECTION 1. GENERAL

15.10 INTRODUCTION 15-1

15.11 FLIGHT INSPECTION PROFILES 15-1
a. ILS-1 Arc Flight Profile 15-1
b. ILS-2 In-Bound Level Run Flight Profile 15-2
c. ILS-3 In-Bound Approach Flight Profile 15-4
d. Clearance Below Path (CBP) Approach 15-6

15.12 ILS MAINTENANCE STANDARDS AND TOLERANCES 15-6

15.13 ILS INSPECTION GUIDANCE 15-18
Localizer 15-18
Glideslope 15-19

SECTION 2. LOCALIZER

15.20 INTRODUCTION 15-20
a. Characteristics 15-20
b. Classification 15-20
c. Identification 15-20

15.21 FLIGHT INSPECTION PROCEDURES 15-20
a. Identification and Voice 15-20
b. Power Ratio 15-21
c. Modulation Level 15-22
d. Modulation Equality 15-23
e. Phasing 15-23
f. Width and Symmetry 15-24
g. Clearance 15-26
h. Alignment and Structure 15-29
i. Polarization 15-33
j. Monitor References 15-34
k. Alignment Monitor Reference 15-34
l. Equality of Modulation 15-37
m. RF Power Monitor Reference 15-38
n. High Angle Clearance 15-40
o. Dephase 15-40
p. Standby Equipment 15-41
q. Standby Power 15-41
r. Reporting Fixes, SID(s), DP(s), STAR(s), and Profile Descents 15-42

TABLE OF CONTENTS

Paragraphs *Title* *Pages*

SECTION 3. GLIDE SLOPE

15.30 FLIGHT INSPECTION PROCEDURES 15-43
a. Modulation Level 15-43
b. Modulation Equality 15-43
c. Phasing 15-44
d. Null Check 15-50
e. Antenna Offset 15-51
f. Spurious Radiation 15-51
g. Angle 15-52
h. Width 15-53
i. Symmetry 15-54
j. Structure-Below-Path 15-54
k. Clearances 15-55
l. Mean Width 15-56
m. Tilt 15-56
n. Structure and Zone 3 Angle Alignment 15-57
o. Transverse Structure—Endfire Glide Slope 15-59
p. Monitors 15-62
q. RF Power Monitor Reference 15-62
r. Glide Slope Best-Fit Straight Line (BFSL) 15-63
s. Tilt Checks 15-66
t. Special Checks 15-66

SECTION 4. 75 MHz MARKER BEACON

15.40 INTRODUCTION 15-67
a. General 15-67
b. Characteristics 15-67
c. Classification 15-67

15.41 FLIGHT INSPECTION PROCEDURES 15-68
a. Identification and Modulation Tone 15-68
b. Width and Coverage 15-69
c. Proximity Check 15-71
d. Holding Fixes 15-73
e. Standby Equipment 15-73
f. Standby Power 15-73

15.42 TABLES AND SUPPLEMENTAL INFORMATION 15-74

TABLE OF CONTENTS

Paragraphs *Title* *Pages*

FIGURES

Figure 15-1A Single Frequency Localizer 15-12
Figure 15-1B Dual Frequency Localizer 15-13
Figure 15-1C Null Reference Glide Slope 15-14
Figure 15-1D Capture Effect Glide Slope 15-15
Figure 15-1E Sideband Reference Glide Slope 15-16
Figure 15-1F Endfire Glide Slope 15-17
Figure 15-2 Fix and Transition Coverage Requirements 15-42
Figure 15-3 Radiation Pattern – Plan View 15-67
Figure 15-4 Marker Beacon Width 15-69
Figure 15-5 Marker Beacon Coverage 15-70
Figure 15-6 Marker Beacon/ Procedure Intermix 15-71
Figure 15-7 Marker Beacon Overlap 15-72
Figure 15-8 75 MHz Marker Width Measurement 15-74
Figure 15-9 75 MHz Marker Width Measurement (A to B Equals Width, Includes the Hole) 15-74
Figure 15-10 Examples of Patterns Not Meeting Width Criteria 15-74
Figure 15-11 75 MHz Marker Beacon Formulas 15-75

This Page Intentionally Left Blank

CHAPTER 15. INSTRUMENT LANDING SYSTEM (ILS)

SECTION 1. GENERAL

15.10 INTRODUCTION. The ILS is designed to provide an approach path for exact alignment and descent of an aircraft on final approach to a runway. The ground equipment consists of two directional transmitting systems. The directional transmitters are the localizer and glide slope.

15.11 FLIGHT INSPECTION PROFILES. ILS facilities are normally inspected along four types of flight paths or "profiles":

- **ILS-1** arc,
- **ILS-2** in-bound level run,
- **ILS-3** in-bound approach to threshold with level flight over the runway
- **CBP** clearance below path approach to threshold.

a. ILS-1 Arc Flight Profile. This profile provides for inspection of the localizer front and back course width, symmetry, sector clearances, and localizer signal strength. Complete localizer width reference limit (monitor) in this mode.

"FLIGHT INSPECTION ARC"
ILS Front or Back Course

Aircraft Configuration

A/C	Speed KIAS	Flaps	Gear
CL601/ 4	170- 250	UP	UP
Lear 60	170- 250	UP	UP
BE300	170- 200	UP	UP
HS125	170- 250	UP	UP

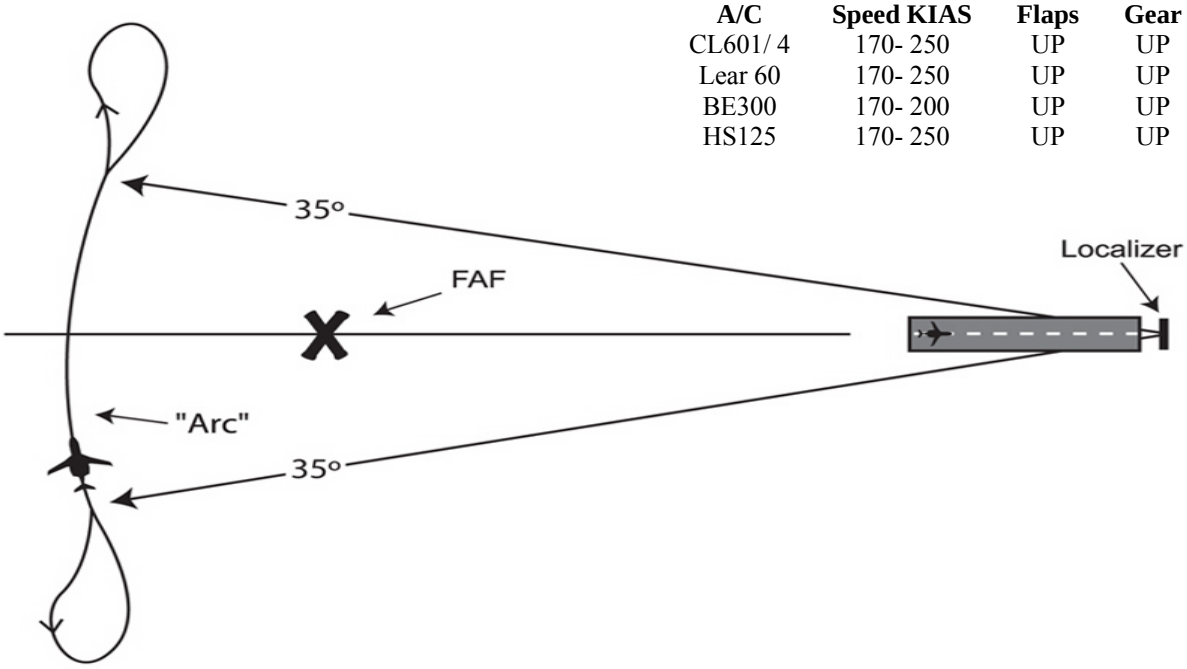

(1) Maneuvering. The ILS-1 is an arc flown either clockwise or counterclockwise at a set distance from the facility. Measurements are normally made arcing across the course at the lower standard altitude (LSA) of 1,500 ft above the antenna or 500 ft above intervening terrain, whichever is higher, between 6 and 10 nm (10 nm being optimum) from the localizer antenna to include 35°on each side of the course, starting at approximately 40°. On periodic checks, course width may be checked at distances from 10 - 14 nm.

NOTE: Do not consider man-made obstacles for ILS-1 altitude determination unless the obstruction is in the flight path of the aircraft

(2) AFIS. On the MISC SERV page, select the ILS-1 mode. Configure the NAV/ TEST CTRL page IAW TI 4040.55, Section 4.

(3) Other considerations. When measuring course width only, an arc from 10° to 10° may be flown. During monitor checks, the final normal width may be flown from 10° to 10° if clearances meet tolerances for normal, in the monitor configuration. During commissioning inspections or when numerous adjustments to the width are anticipated, it may save time and fuel to fly 10° to 10° until a satisfactory width is attained, then continue with the required 35° to 35° runs to check the clearances.

Position is referenced to the Localizer. P-RNG in ILS 1 Mode is the distance from the localizer and P-BRG is degrees to the front course or back course bearing.

If the received results of an ILS-1 are not what was expected:

- Check that 0µA is received at the 0° bearing.
- Check the IRU status (IRU S/D).
- Check if the P-RNG reflects the DME distance.
- Ensure that the Facility data page is correct.
- Compare the traces of both receivers.
- Check left to right side antenna by flying CW and CCW arcs and comparing results.
- Check another facility.
- Compare AFIS results with manual analysis.

b. ILS-2 In-Bound Level Run Flight Profile. This maneuver measures glide slope angle, path width, symmetry, and clearance above path (CAP), structure-below-path (SBP), and signal strength. Complete glide slope width reference limit (monitor) checks in this mode.

"FLIGHT INSPECTION HOLDING PATTERN"
ILS Front course only

	Aircraft Configuration		
A/C	**Speed KIAS**	**Flaps**	**Gear**
CL601/ 4	170- 200	UP	UP
Lear 60	170- 250	UP	UP
BE300	170- 200	UP	UP
HS125	170- 250	UP	UP

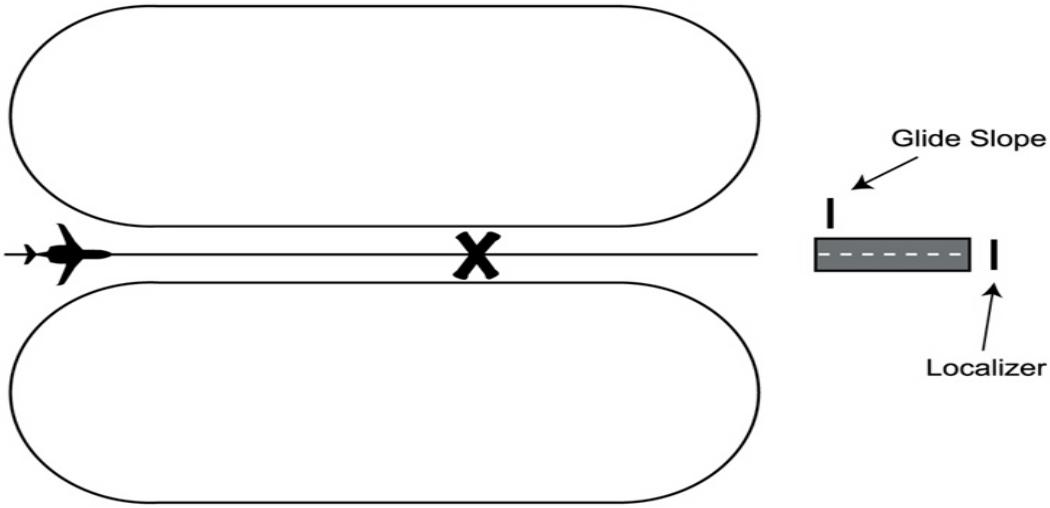

(1) Maneuvering. The ILS-2 profile is flown at a constant airspeed inbound along the runway bearing (desired course bearing for SOIA), from approximately 6 miles outside the Final Approach Fix (FAF) to approximately 2 miles inside the FAF. Starting distance must allow AFIS to capture the 190 µA fly up point. It also must be flown inbound far enough to ensure 150 µA fly-down occurs before the first false path. Left or right turns are at the discretion of Air Traffic. Fly the established level run altitude corrected to true at 1,500 ft above the antenna or 500 ft above terrain, whichever is higher. Another altitude may be established (e.g., airspace, unmeasurable crosspointer transitions, comparability to actual path angle, or a lower altitude to obtain 190 µA). Document the established altitude on the facility data sheet.

(2) AFIS. On the MISC SERV page, select the ILS-2 mode. Configure the NAV/TEST CTRL page IAW TI 4040.55, Section 4.

(3) Other considerations

(a) AFIS will not execute until the aircraft heading is less than 45° from the RWY BRG. Position is referenced to the centerline abeam the Glide Slope. P-RNG is the distance from the Glide Slope and P-BRG is degrees to the front course bearing.

(b) If the received results of an ILS-2 are not as expected:

1. Check the IRU status (IRU S/ D)
2. Check if the P-RNG reflects the DME distance.
3. Ensure that the facility date page is correct.
4. Compare AFIS results with manual analysis.
5. Compare the results from both receivers.
6. Check another facility for repeatable AFIS results.

c. ILS-3 In-Bound Approach Flight Profile. This profile provides for inspection of the localizer front or back course alignment, structure, signal strength, polarization, and modulation, glide slope angle, angle alignment, structure, signal strength, and modulation, as well as marker beacon width and tone.

"FLIGHT INSPECTION LOW APPROACH"

	Aircraft Configuration		
A/C	**Speed KIAS**	**Flaps**	**Gear**
CL601/ 4	140 – 180	20	DN
Lear 60	160 – 200	20	DN
BE300	140 – 160	Approach	DN
HS125	Vref+25	15	DN

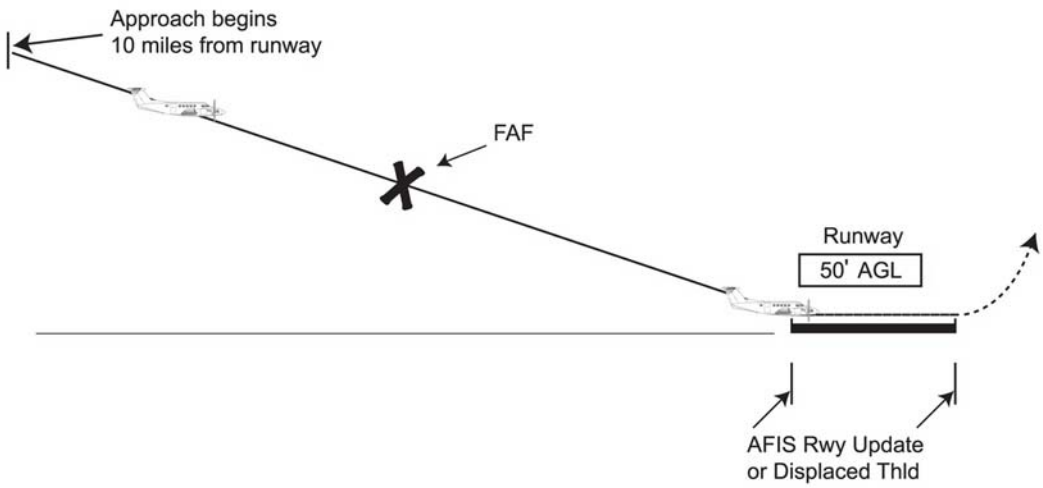

(1) Maneuvering. This operation is for front or back course. Stabilize the aircraft inbound on-course at approximately 10 nm from the threshold. The flight inspection low approach terminates at the departure end of the runway. All ILS-3 Mode maneuvers must be flown coupled in the approach mode to the extent allowed by the Aircraft/ Autopilot Limitations Handbook and TI 4040.50 (this does not preclude manually flying all ILS facilities in the event of coupling problems or other unusual circumstances). Continue the approach down the full length of the runway, 50 to 100 ft above the runway. Standard runway updates are from threshold (green lights) to runway end (red lights), unless otherwise stated on the facility data sheet or if noted in the Airport/ Facility Directory (green book). If any doubt exists, compare runway length with threshold displacement information on the facility data sheet and in the Airport/ Facility Directory (green book). Intercepting the glide path 500 ft above the GSI altitude will allow the aircraft to be stabilized on the approach when transitioning and measuring the outer marker. Stabilize the aircraft on the localizer outside of the FAF to execute vertical polarization.

(2) AFIS. On the MISC SERV page, select the ILS-3 mode. Configure the NAV/TEST CTRL page. See TI 4040.55, Section 4.

(3) Other Considerations:

(a) P-RNG in ILS 3 Mode is the distance from the threshold, and P-BRG is degrees to the front course bearing.

(b) If the received results of an ILS-3 are not what was expected:

1 Ensure that the Facility data page is correct. Compare the runway length (RW LEN) to landing length on the AVNIS data sheet and the approach procedure.

2 Check the IRU status (IRU S/D).

3 Check another facility for repeatable AFIS results.

d. Clearance Below Path approach (CBP): This profile provides for inspection of the full fly-up signal below the Glide Path.

	Aircraft Configuration		
A/C	**Speed KIAS**	**Flaps**	**Gear**
CL601/ 4	140 – 180	20	DN
Lear 60	160 – 200	20	DN
BE300	140 – 160	Approach	DN
HS125	Vref+25	15	DN

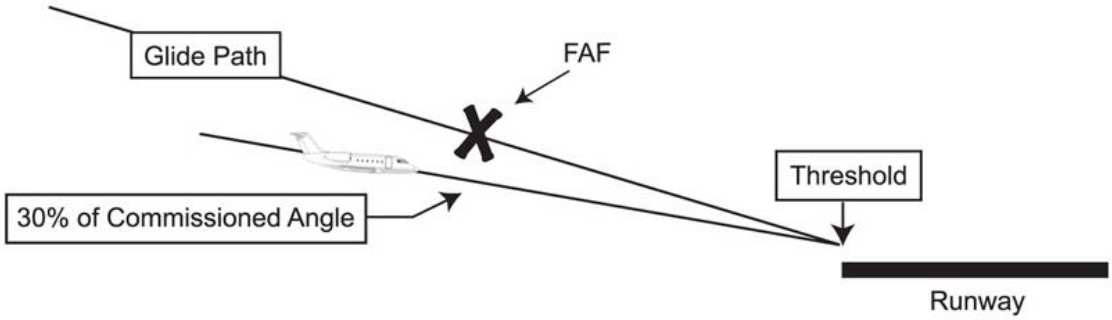

(1) Maneuvering. Fly the CBP profile along the runway bearing (or at the extremity of the localizer course for tilt checks) from outside the glide slope intercept (GSI) to the threshold. For any facility configuration where the 190 µA/ 150Hz structure below path point cannot be found, start the run from the edge of the glide slope service volume. Maintain obstacle clearance while remaining at or below the 180 µA point (150 µA point for alarm conditions). For a 3° glide slope, descend on a 1° angle while the technician reads the micro-amp deflection.

(2) AFIS. On the MISC SERV page, select the ILS-2 mode (maneuver is typical flown in ILS 2 Mode recording raw data). Prior to the GSI, press the PLOT ON/ OFF button to start printing raw data. The technician will read the micro-amp deflection to the pilot during the descent.

(3) Other Considerations. The CBP may be run in the ILS-3 mode. If the ILS-3 mode is used, the SYS PLOT page GS RAW CP baseline will need to be moved (e.g. 08.0) and/or the change the RAW CP SCALE to 100µA. These changes are required to keep the glide slope cross pointer on the paper.

15.12 ILS Maintenance Standards and Tolerances. Flight Inspection personnel should be knowledgeable of certain maintenance standards and tolerances to assist maintenance and to more effectively complete the flight inspection mission. The following paragraphs and tables outline pertinent information.

a. Flight Inspection Requirements based on Maintenance Activities

(1) Reconfiguration. Reconfiguration Inspections encompass most, if not all, commissioning requirements. The following activities require this type inspection:

(a) System change out (i.e. Mark 1F to Mark-20, etc)

(b) Type change (i.e. Null Reference to Capture Effect, etc)

(c) System relocation. (i.e. from one runway to another, etc)

(d) Antenna relocation (i.e. Loc antenna moved from offset to straight-in, etc)

(e) Any other maintenance activity that changes the radiation pattern of the facility.

(2) Activities Requiring a Confirming Inspection. The type of check and parameters inspected for a confirming flight inspection are determined on a case-by-case basis. The following activities specifically require a confirming flight inspection:

(a) Changes to obstructions, buildings, power lines, etc., that may affect the radiation signal.

(b) Construction, runway repairs, etc., that were performed in the general localizer or glide slope area, if there is any doubt about how they affect facility performance.

(c) A change in the facility-assigned operating frequency.

(d) Repositioning of any of the glide slope antennas on the mast.

(3) Activities Requiring a Confirming Inspection or Technical Operations Service Area Authorization. The responsible Technical Operations Service Area may authorize, on a case-by-case basis, facility restoration without a confirming inspection. This should include a telephone call from regional engineering, followed by a confirming letter. The restoration must be supported by a formal letter of authorization from the region, which lists the before and after readings, until the log entries covering these activities are purged.

(a) Replacement of any transmit RF components, such as RF lines and antenna components, RF bridges, electronic modulators, power amplifier, power dividers, and transmitter as complete units provided:

1 They contain any of these critical components

2 The transmitter is of the same type

(b) Repair or replacement of any of the localizer antennas in the radiating array, provided reference null data (individual pair and composite) is available.

(c) Replacement, removal, repair or reinstallation of any of the glide slope antennas in the radiating array, provided the system is adjusted to the previously established reference H probe readings, i.e., phase and amplitude.

(4) Activities that Do Not Require a Confirming Flight Inspection. All other maintenance activities that meet the maintenance requirements of Order 6750.49 do not require a confirming flight inspection.

b. ILS Maintenance Reference Values are parameters established by Technical Operations Maintenance and evaluated by Flight Inspection. These parameters include, but are not limited to, power, modulation balance, and phasing. To ensure that the ILS will not exceed flight inspection tolerances during normal operation, Technical Operations Maintenance has established tighter reference tolerances. The two types of reference tolerances are “standard” and “initial.” Standard tolerances represent the facility operating at optimum. Initial tolerances represent a range of desired values for a particular parameter. IAW FAA Order 6750.49, ILS Maintenance Handbook, FAA and non-Federal U.S. civil facilities must meet initial tolerances any time a reference is established. New reference values must be established if maintenance adjusts the ILS to a new reference setting, the facility is found operating beyond periodic flight inspection tolerances IAW Order 8200.1, Paragraph 15.60a or b, or when validating references. If, after repeated attempts, the results are beyond the initial tolerance but within flight inspection tolerances, continue the flight inspection if maintenance wishes to restore the facility. Document the circumstances on the flight inspection report and the Daily Flight Log. The following tables include localizer and glide slope standard and initial maintenance reference tolerances. **Note that these are NOT flight inspection tolerances. Flight Inspectors cannot remove facilities from service if parameters exceed the standard or initial tolerances but are within flight inspection tolerances.**

Localizer Reference Tolerances

Parameter	Standard (Optimum)	"Initial" Tolerance
Width		
Normal	Commissioned Width	≤ 0.10°
Wide	≤ 10% of Commissioned Width	≤ 14% of Commissioned Width
Equality in Normal (Standby Transmitter) (2)	Equal to Reference Transmitter	Standard ± 0.10°
Clearances		
Normal	≥ 175 μA	≥ 165 μA
Wide	≥ 160 μA	≥ 150 μA
Equality in Normal (Standby Transmitter) (2)	Equal to Reference Transmitter	Standard ± 15 μA
Alignment (1)		
Front Course (CAT I/ II/ III), and SDF on CL	0 μA	≤ 3 μA
Back Course (Independently Monitored)	0 μA	≤ 10 μA
Back Course (Subordinate to Front Course)	0 μA	≤ 65 μA
Offset, Localizer, and SDF	0 μA	≤ 8 μA
LDA (3)	0 μA	≤ 8 μA
Equality in Normal (Standby Transmitter) (2)	Equal to Reference Transmitter	Standard ± 3 μA

(1) The "Initial" alignment tolerance must be applied as the "Final" value on all Periodic with Monitor type checks.

(2) Dual Transmitter Sites: Applies during any inspection where the reference and standby transmitters are both evaluated in normal. The standby transmitters should match the reference transmitter within the prescribed equality tolerances during the same flight inspection. If Maintenance is unable to adjust the transmitter within equality limits and meets FAA Order 8200.1, Paragraph 15.60a or b tolerances, the transmitter may remain in service unless Maintenance elects to remove it from service.

(3) The numerical value applies to those LDA(s) where alignment is measured by AFIS or theodolite. The SAT/ UNSAT criteria remains valid for those facilities such that AFIS is unsuitable and routine theodolite use is not warranted.

Glide Slope Reference Tolerances

Parameter	Standard (Optimum)	"Initial" Tolerance
Path Angle		
Normal	Commissioned Angle (CA)	CA ± 0.05°
High (EFGS)	CA + 0.05°	CA + 8.0%
Low (CEGS) (SBRGS)	CA – 0.05°	CA – 6.0%
Equality in Normal (Standby Transmitter) (1)	Equal to Reference Transmitter	Standard ± 0.03°
All other abnormal conditions	**CA ± 0.10°**	**CA - 6.0% to + 8.0%**
Path Width		
Normal	0.70°	0.65° to 0.75°
Wide	0.80°	0.75° to 0.87°
Equality in Normal (Standby Transmitter) (1)	Equal to Reference Transmitter	Standard ± 0.03°
All other abnormal conditions	**0.80°**	**0.53° to 0.87°**
Structure Below Path		
Normal	≥ 70% of CA	≥ 50% of CA
Equality in Normal (Standby Transmitter) (1)	Equal to Reference Transmitter	Standard ± 0.20°
All other abnormal conditions	**≥ 60% of CA**	**≥ 40% of CA**
Symmetry		
CAT I	50%	60 to 40%
CAT II, III	50%	55 to 45%
De-phase (Advance and Retard)		
Main Sideband	≤ 30°	18° to 30°
Mid Ant (CEGS)	≤ 20°	10° to 20°
Upper Ant (SBRGS)	≤ 30°	18° to 30°
Upper Antenna Attenuation		
Sideband Reference	1 dB	≤2 dB
Capture Effect	5 dB	≤ 5 dB

(1) Dual Transmitter Sites: Applies during any inspection where the reference and standby transmitters are both evaluated in normal. The standby transmitters should match the reference transmitter within the prescribed equality tolerances during the same flight inspection. If Maintenance is unable to adjust the transmitter within equality limits and meets FAA Order 8200.1 tolerances, the transmitter may remain in service unless Maintenance elects to remove it from service.

c. Airborne Measurements of ILS References

(1) Airborne Measurements of ILS References

(a) Even though an abnormal condition is used primarily to evaluate one parameter, such as glide slope width, the secondary measurements of angle and structure below path (SBP) must also meet the "Initial" tolerances. Likewise, Width and SBP are also required to remain within "Initial" values when Angle references are adjusted.

(b) Do not use the term "Alarm" on a reference inspection; instead use "Reference Value" when requesting the abnormal conditions.

(c) Provide Width, Angle (corrected by ILS-3), Symmetry (no tolerance in abnormal conditions), and SBP on all ILS-2 runs. If the angle correction factor is not established at the beginning of the check, ensure the corrected values are transmitted to maintenance before flight inspection departs the area.

(d) Provide width, symmetry (in Normal only), and low clearances on all ILS-1 runs.

(e) Provide the marker minor axis measurements when establishing references for those facilities.

(f) Request acknowledgement of all data transmitted to maintenance.

(g) If any report value changes as a result of a review during report preparation or quality review, contact the ground technician and provide the corrected numbers. This is to ensure that the recorded maintenance data matches the flight inspection report. **If the ILS maintenance data does not match the corresponding flight inspection results, the maintenance data is invalid pending another flight inspection**.

(h) Localizer alignment monitor references are not based on airborne measurements, IAW Order 6750.49; applicable Technical Operations Service Area approved special request is required.

(i) Dual Transmitter Facilities. Standby transmitters should match the reference transmitter within the prescribed equality limits during the same flight inspection. This applies to any type inspection when both primary and standby transmitters are evaluated. If Maintenance is unable to adjust transmitter within equality limits and meets FAA Order 8200.1 tolerances, the transmitter may remain in service unless Maintenance elects to remove it from service.

(2) Required Airborne Measurements per Facility Type

Figure 15-1A Single Frequency Localizer		
ILS Reference Change	**Required Airborne Measurements**	**Remarks / Tolerance**
Alignment	Alignment & Structure FC & BC	(1) LDA and Offset ILS ≤ 8 µA
SBO Power: Normal or Width Monitor Ref ADJ	Normal Course Width/ Clearance (FC & IMBC*)	(2) (4)
	Wide Monitor Reference (FC& IMBC*)	(3) (5)
SBO Phase	Normal Course Width/ Clearance (FC & IMBC*)	(2) (4)
	Wide Monitor Reference (FC & IMBC*)	(3) (5)
Commissioning or Total References	Alignment & Structure (FC, BC& IMBC*)	(1) LDA and Offset ILS ≤ 8 µA
	Normal Course Width/ Clearance (FC & IMBC*)	(2) (4)
	Wide Monitor Reference (FC & IMBC*)	(3) (5)

*IMBC = Independently Monitored Backcourse

(1) Alignment ≤ 3 µA (FC), ≤ 65 µA (BC), ≤ 10 µA (IMBC*)

(2) Course Width ≤ 0.10° Commissioning Width

(3) Course Width ≤ 14 % Commissioned Width

(4) Clearances ≥ 165 µA

(5) Clearance ≥ 150 µA

Figure 15-1B Dual Frequency Localizer		
ILS Reference Change	**Required Airborne Measurements**	**Remarks / Tolerance**
Alignment	Alignment & Structure (FC, BC& IMBC*)	(1) LDA and Offset ILS ≤ 8 µA
Course/ Clearance SBO Power: Normal Or Width Monitor Ref ADJ	Normal Course Width/ Clearance (FC& IMBC*)	(2) (4)
	Wide Monitor Reference (FC & IMBC*)	(3) (5)
Course/Clearance SBO Phase	Normal Course Width/ Clearance (FC & IMBC*)	(2) (4)
	Course/Clearance Wide Monitor Reference (FC & IMBC*)	(3) (5)
Commissioning or Total References	Alignment & Structure FC & BC	(1) LDA and Offset ILS ≤ 8 µA
	Normal Course Width/ Clearance(FC & IMBC*)	(2) (4)
	Course/Clearance Wide Monitor Reference (FC & IMBC*)	(3) (5)

*IMBC = Independently Monitored Backcourse
(1) Alignment ≤ 3 µA (FC), ≤ 65 µA (BC), ≤ 10 µA (IMBC)
(2) Course Width ≤ 0.10° Commissioning Width
(3) Course Width ≤ 14 % Commissioned Width
(4) Clearances ≥ 165 µA
(5) Clearance ≥ 150 µA

Figure 15-1C Null-Reference Glide Slope		
ILS Reference Change	**Required Airborne Measurements**	**Remarks / Tolerance**
SBO Power: Normal or Monitor Reference ADJ	Normal WAS*	(1) (4) (7) (8)
	Wide Monitor Reference	(2) (5) (9)
SBO Phase: Normal or Monitor Reference ADJ	Normal WAS*	(1) (4) (7) (8)
	Wide Monitor Reference	(2) (5) (9)
	Advance/ Retard main SBO Phase (1 TX)	(2) (6) (9) Phaser Setting 18 – 30°
Commissioning or **Total References**	Normal WAS*	(1) (4) (7) (8)
	Wide Monitor Reference	(2) (5) (9)
	Advance/ Retard main SBO Phase (1 TX)	(2) (6) (9) Phaser Setting 18 – 30°
	Actual Angle**	(3)
New Antenna Heights or **Modulation Balance ADJ**	Normal WAS*	(1) (4) (7) (8)
	Wide Monitor Reference	(2) (5) (9)
	Advance/Retard main SBO Phase (1 TX)	(2) (6) (9) Phaser Setting 18 – 30°
	Actual Angle**	(3)

*WAS = Width, Angle, Structure Below Path Level Run
**Region Approval Required to Change Angle

(1) Path Angle = +10 % / -7.5 %
(2) Path Angle = Commissioned Angle +8 % / -6 %
(3) Path Angle = Commissioned ± 0.05°
(4) Path Width = 0.65 – 0.75°
(5) Path Width = 0.75 – 0.87°
(6) Path Width = 0.53 – 0.87°
(7) Symmetry (CAT I) = 40 – 60%, (CAT II/III) = 45 – 55%
(8) Structure Below Path = ≥ 50% Commissioned Angle
(9) Structure Below Path = ≥ 40% Commissioned Angle

Figure 15-1D Capture Effect Glide Slope		
ILS Reference Change	**Required Airborne Measurements**	**Remarks / Tolerance**
SBO Power: Normal or Monitor Reference ADJ	Normal WAS*	(1) (4) (7) (8)
	Course Wide/ Clearance Modulation Monitor Reference	(2) (5) (9)
Middle Antenna Phaser: Normal or Monitor Reference ADJ	Normal WAS*	(1) (4) (7) (8)
	Course Wide/ Clearance Modulation Monitor Reference	(2) (5) (9)
	ADV/ RTD Middle ANT Phaser Monitor Reference (1TX)	(2) (6) (9) Phaser Setting 10 – 20°
***Main SBO Phaser**: Normal or Monitor Reference ADJ	Normal WAS*	(1) (4) (7) (8)
	Course Wide/ Clearance Modulation Monitor Reference	(2) (5) (9)
	Advance/ Retard Main SBO Phase (1 TX)	(2) (6) (9) Phaser Setting 18 – 30°
Upper Antenna Attenuate Monitor Reference ADJ	Upper Antenna Attenuate Monitor Reference	(2) (5) (9) Attenuator ≤ 5 dB
Commissioning or **Total References**	Normal WAS*	(1) (4) (7) (8)
	Course Wide/ Clearance Modulation Monitor Reference	(2) (5) (9)
	ADV/RTD Middle ANT Phaser Monitor Reference (1TX)	(2) (6) (9) Phaser Setting 10 – 20°
	Advance/Retard Main SBO Phase (1 TX)	(2) (6) (9) Phaser Setting 18 – 30°
	Upper Antenna Attenuate Monitor Reference	(2) (5) (9) Attenuator ≤ 5 dB
	Actual Angle**	(3)
New Antenna Heights or **Modulation Balance ADJ**	Normal WAS*	(1) (4) (7) (8)
	Course Wide/ Clearance Modulation Monitor Reference	(2) (5) (9)
	ADV/ RTD Middle ANT Phaser Monitor Reference (1TX)	(2) (6) (9) Phaser Setting 10 – 20°
	Advance/Retard Main SBO Phase (1 TX)	(2) (6) (9) Phaser Setting 18 – 30°
	Upper Antenna Attenuate Monitor Reference	(2) (5) (9) Attenuator ≤ 5 dB
	Actual Angle**	(3)

*WAS = Width, Angle, Structure Below Path Level Run
**Region Approval Required to Change Angle
(1) Path Angle = +10 % / -7.5 %
(2) Path Angle = Commissioned Angle +8 % / -6 %
(3) Path Angle = Commissioned ± 0.05°
(4) Path Width = 0.65 – 0.75°
(5) Path Width = 0.75 – 0.87°
(6) Path Width = 0.53 – 0.87°
(7) Symmetry (CAT I) = 40 – 60%, (CAT II/III) = 45 – 55%
(8) Structure Below Path = ≥ 50% Commissioned Angle
(9) Structure Below Path = ≥ 40% Commissioned Angle

Figure 15-1E Sideband Reference Glide Slope		
ILS Reference Change	**Required Airborne Measurements**	**Remarks / Tolerance**
SBO Power: Normal or Monitor Reference ADJ	Normal WAS*	(1) (4) (7) (8)
	Wide/ Clearance Modulation Monitor Reference	(2) (5) (9)
Upper Antenna Phaser ***Monitor Reference ADJ***	Normal WAS*	(1) (4) (7) (8)
	Wide Modulation Monitor Reference	(2) (5) (9)
	ADV/RTD Upper ANT Phaser Monitor Reference (1TX)	(2) (6) (9) Phaser Setting 18 – 30°
	Actual Angle Check**	(3)
Low Angle Monitor Reference: ***Upper Antenna Attenuate or Sideband Power Divider***	Normal WAS*	(1) (4) (7) (8)
	Wide Modulation Monitor Reference	(2) (5) (9)
	Upper Antenna Attenuate Monitor Reference (Low Angle)	(2) (5) (9) Attenuator ≤ 2 dB
	Actual Angle Check**	(3)
Commissioning or Total References	Normal WAS*	(1) (4) (7) (8)
	Wide Modulation Monitor Reference	(2) (5) (9)
	ADV/RTD Upper ANT Phaser Monitor Reference (1TX)	(2) (6) (9) Phaser Setting 10 – 20°
	Upper Antenna Attenuate Monitor Reference (Low Angle)	(2) (5) (9) Attenuator ≤ 5 dB
	Actual Angle**	(3)
New Antenna Heights or **Modulation Balance Change, normal SBO Power Divider, or Upper Antenna Phase ADJ**	Normal WAS*	(1) (4) (7) (8)
	Wide Modulation Monitor Reference	(2) (5) (9)
	ADV/RTD Upper ANT Phaser Monitor Reference (1TX)	(2) (6) (9) Phaser Setting 10 – 20°
	Upper Antenna Attenuate Monitor Reference (Low Angle)	(2) (5) (9) Attenuator ≤ 2 dB
	Actual Angle**	(3)

*WAS = Width, Angle, Structure Below Path Level Run
**Region Approval Required to Change Angle
(1) Path Angle = +10 % / -7.5 %
(2) Path Angle = Commissioned Angle +8 % / -6 %
(3) Path Angle = Commissioned ± 0.05°
(4) Path Width = 0.65 – 0.75°
(5) Path Width = 0.75 – 0.87°
(6) Path Width = 0.53 – 0.87°
(7) Symmetry (CAT I) = 40 – 60%, (CAT II/III) = 45 – 55%
(8) Structure Below Path = ≥ 50% Commissioned Angle
(9) Structure Below Path = ≥ 40% Commissioned Angle

Figure 15-1F Endfire Glide Slope

ILS Reference Change	Required Airborne Measurements	Remarks / Tolerance
SBO Power: Normal or Monitor Reference ADJ	Normal WAS*	(1) (4) (7) (8)
	Wide Monitor Reference	(2) (5) (9)
Main SBO Phaser: Normal or Monitor Reference ADJ	Normal WAS*	(1) (4) (7) (8)
	Wide Monitor Reference	(2) (5) (9)
	ADV/RTD SBO Phaser (1TX)	(2) (6) (9)
Main Antenna Array Phaser: (High/ Low) Angle Reference ADJ	Normal WAS*	(1) (4) (7) (8)
	Wide Monitor Reference	(2) (5) (9)
	High Angle Monitor Reference	(6) (9) (10)
	Low Angle Monitor Reference	(6) (9) (11)
	Actual Angle Check**	(3)
Commissioning or **Total References**	Normal WAS*	(1) (4) (7) (8)
	Wide Monitor Reference	(2) (5) (9)
	ADV/RTD SBO Phaser (1TX)	(2) (6) (9)
	High Angle Monitor Reference	(6) (9) (10)
	Low Angle Monitor Reference	(6) (9) (11)
	Actual Angle Check**	(3)
New Antenna Pedestal Positions (Transverse Structure ADJ), **Modulation Balance Change,** or **Normal Main Array Phaser (Z4) Setting Change**	Normal WAS*	(1) (4) (7) (8)
	Wide Monitor Reference	(2) (5) (9)
	ADV/RTD SBO Phaser (1TX)	(2) (6) (9)
	High Angle Monitor Reference	(6) (9) (10)
	Low Angle Monitor Reference	(6) (9) (11)
	Actual Angle Check**	(3)

*WAS = Width, Angle, Structure Below Path Level Run
**Region Approval Required to Change Angle

(1) Path Angle = +10 % / -7.5 %
(2) Path Angle = Commissioned Angle +8 % / -6 %
(3) Path Angle = Commissioned ± 0.05°
(4) Path Width = 0.65 – 0.75°
(5) Path Width = 0.75 – 0.87°
(6) Path Width = 0.53 – 0.87°
(7) Symmetry (CAT I) = 40 – 60%, (CAT II/III) = 45 – 55%
(8) Structure Below Path = ≥ 50% Commissioned Angle
(9) Structure Below Path = ≥ 40% Commissioned Angle
(10) Path Angle = Commissioned Angle +8 %
(11) Path Angle = Commissioned Angle -6 %

15.13 ILS Facility Inspection Guidance. ILS inspections range from simple to complex. There is no one best way to conduct the various checks. However, based on experience and facility performance, there are certain considerations that should be addressed. Crewmembers will discuss the sequence as part of the pre-mission briefing. Refer to FAA Order 8200.1, Chapter 15, for applicable checklists and required parameters to be inspected. The following are generic job aids suggesting the standard logical sequence for a facility inspection**.**

LOCALIZER COMMISSIONING CONSIDERATIONS		
PARAMETER	FLIGHT PROFILE	RATIONALE
Alignment	ILS-3	Establishing normal alignment as the first step of a localizer inspection is not required. However, for simplicity, it is preferable to keep as many similar flight profiles together as possible.
Width	ILS-1	Set normal width before checking monitor configurations. All other configurations are based on normal width power setting.
Monitors	ILS-1	Once all normal parameters are correct, check monitor references to determine the performance of the facility.
Clearance Comparability/High Angle Clearance	ILS-1	Once the monitors are set, clearance comparability and high angle clearance can be checked.
RF Power	ILS-1/3	The facility should work at the reduced power setting at the service volume. It normally is checked after monitor configurations due to a low probability of failure

GLIDESLOPE COMMISSIONING CONSIDERATIONS		
PARAMETER	FLIGHT PROFILE	RATIONALE
Angle	ILS-3	If the angle is outside commissioning tolerance, ground maintenance will have to move the antennas. This will affect all other parameters; therefore, it is important to establish a normal angle first.
Width	ILS-2	Set normal width before checking monitor configurations. All other configurations are based on normal width power setting.
Tilt	ILS-2/CBP	If antenna tilt is out of tolerance, maintenance will have to correct the discrepancy before the inspection continues. Note that if maintenance makes an adjustment here, the normal angle and width will need to be rechecked.
Monitors	ILS-2/CBP	Once all normal parameters are correct, check monitor references and clearance below path to determine the performance of the facility.
RF Power	ILS-2	The facility should work at the reduced power setting at the service volume. It normally is checked after monitor configurations due to a low probability of failure.
Mean Width	ILS-3	Mean width and symmetry can be checked last since there is no tolerance applied.

SECTION 2. LOCALIZER

15.20 Introduction. A localizer is the component of an ILS that provides lateral guidance with respect to the runway centerline. The localizer transmits on VHF frequencies from 108.1 to 111.95 MHz.

a. Characteristics. The two types of localizers are single frequency and dual frequency. Localizers are normally sited along the extended runway centerline; however, some are offset from the extended centerline. Localizer Directional Aid (LDA) facilities may be located at various positions about the runway. Simplified Directional Aid (SDF) facilities will be one of two types, null reference or phase reference, and will have a width of either 6° or 12°.

b. Classification. Localizers are categorized as Category I, II, or III. Procedure use determines the facility category.

c. Identifier. The localizer and LDA transmit a coded three-letter identifier preceded by the letter "I", and the SDF transmits a coded three-letter identifier without the preceding "I".

15.21 Flight Inspection Procedures

a. Identification and Voice. This check ensures identification (and voice if installed) is received throughout the localizer service volume.

Maneuver	Localizer	AFIS	Analysis
ID is verified during all checks. Voice is checked, on-course at the maximum distance structure is evaluated	Course Normal, Clearance Normal		Ensure ID is clear, correct, and that the audio level of the voice is equal to the coded ID level.

Other Considerations:

- Localizer must be restricted if identification is not received in all areas of required coverage. Deny procedure use beyond the distance that identification is not received when checking an ESV.

- Localizers must not be restricted solely because the voice/ ATIS cannot be received. In this event, advise the procedures specialist and/or air traffic operations.

b. Power Ratio. This check measures the ratio of power between the course and clearance transmitters of a dual frequency localizer.

(1) Spectrum Analyzer Method

Maneuver	Localizer	AFIS	Analysis
On-course, in line-of-site of the localizer antenna, within 10 nm, or parked on the runway, on-course	Course RF Power Reference, Clearance Normal		Compare the relative signal strength of the course and clearance signals.

Other Considerations. The best practice is to use the Spectrum Analyzer.

(2) Signal Strength Method

Step	Maneuver	Localizer	AFIS	Analysis
1	On-course, in line-of-site of the localizer antenna (ILS 3), or parked on the runway, at or near the approach end of the runway	Course RF Power Alarm, Clearance Off	ILS-3	Record localizer signal strength or use an AGC meter
2	Same position as Step 1	Course Off, Clearance Normal	ILS-3	Record localizer signal strength or use an AGC meter

Other Considerations. Compute power ratio using the following formula:

$$dB = 20 \log \left(\frac{E_1}{E_2} \right)$$

Where:

dB = Power ratio (dB)

E_1 = Signal Strength of course transmitter as read from the AGC Meter (µvolts)

E_2 = Signal Strength of clearance transmitter as read from the AGC Meter (µvolts)

c. Modulation Level. This check measures the modulation level of the radiated signal.

(1) Modulation Level on Procedural Course

Maneuver (ILS 3)	Localizer	AFIS	Analysis
On-course on-path (at procedural altitude for localizer only facilities) between 10-3 miles from localizer antenna	As required by the checklist	ILS-3	Measure the average modulation percentage.

Other Considerations:

- Some dual frequency antennas do not provide enough clearance power to measure modulation on centerline. For these facilities, measure the clearance-only modulation level while inbound between 5° and 10° off-course at the LSA with the clearance transmitter in modulation balance configuration.
- Preliminary checks may be made when transitioning to on-course during course width and symmetry measurements; however, modulation must be validated while flying inbound on-course.
- On single frequency localizers, adjustments to the front course modulation affect the back course; therefore, adjustments are not required on the back course.
- Where a separate antenna provides clearance, as well as a back course (such as a waveguide system), modulation checks and adjustments of the clearance transmitter(s) are valid only while on the back course, unless the course transmitter is off.

(2) Modulation on normal clearance checks. Some receivers see excessive modulation as low clearances; modulation must be measured during normal clearance checks.

Maneuver (ILS 1)	Localizer	AFIS	Analysis
35°-35°, Front Course and Back Course	Course Normal, *Clearance Normal	ILS-1	Measure the average modulation percentage.

(* Dual Freq Only)

Other Considerations:

- Out-of-tolerance modulation must be a basis for restrictions on facilities installed, relocated, reconfigured, or modified with new type antennas after January 1, 2000.

d. Modulation Equality. This check verifies that the 90Hz and 150Hz signals are modulating the carrier equally. Use this measurement as a reference for phasing and alignment monitors.

Warning: Hazardous and Misleading Information
Misleading information is produced by this configuration. Ensure NOTAM is active. Monitor ATC communications for improper clearances to other aircraft.

Step	Maneuver	Localizer	AFIS	Analysis
1	On-course on-path (at the procedural altitude for localizer-only facilities) between 10-3 miles from localizer antenna	Course Carrier only, *Clearance Off	ILS-3	Measure localizer crosspointer
*2	Same position as Step 1	Course Off, *Clearance Carrier only	ILS-3	Measure localizer crosspointer

(* Dual Freq Only)

Other Considerations. Check course alignment after adjustments to modulation equality.

e. Phasing. This check measures the phase relationship between the carrier and sideband signals are optimum.

Warning: Hazardous and Misleading Information
Misleading information is produced by this configuration. Ensure NOTAM is active. Monitor ATC communications for improper clearances to other aircraft.

Step	Maneuver	Localizer	AFIS	Analysis
1	Fly inbound to the antenna at an altitude and azimuth, determined by maintenance, between 10 and 3 miles	Course Quadrature, *Clearance Off	ILS-3	Transmit crosspointer values to the ground technician to adjust phasing. Optimum is established when the crosspointer is the same value as modulation equality.
*2	Same position as Step 1	Course Off, *Clearance Quadrature	ILS-3	Same as Step 1

(* Dual Freq Only)

Other Considerations:

- The facility will normally be phased using ground procedures
- Obtain the correct azimuth for phasing from facility maintenance.
- These procedures apply to the back course if maintenance requests phasing on the back course.

f. Width and Symmetry. The purpose of this check is to establish and maintain a course sector width and ratio between half-course widths that will provide the desired displacement sensitivity at the procedural missed approach point (MAP) or threshold, and is within the limitations of the procedural protected area.

Maneuver	Localizer	AFIS	Analysis
Check width and symmetry between 6-10 miles at LSA. 10 nm is the optimum distance. Periodic checks may be checked from 10 - 14 miles from the antenna. If the comparability check was completed satisfactory higher altitudes may be used.	Course Normal, *Clearance Normal	ILS-1	Width is measured in degrees between where the crosspointer crosses the 90hz and150hz 150µA points. Symmetry is determined by comparing the 90Hz half width (the width in degrees from the 90 Hz 150µA to the 0µA point) to the localizer width. $\text{Symmetry} = \left(\frac{\text{90 Hz half width}}{\text{width}}\right) \text{X}100$

(* Dual Freq Only)

Other Considerations

- If a comparability check is documented on the data sheet, any altitude from LSA up to the altitude documented on the data sheet may be used to fly the arcs.

Reference:

- Higher altitudes may be used, if a comparability check in the normal configuration was made (usually at commissioning) at LSA and the higher altitude, and the results were within tolerance and were within ± 0.2°
- If the commissioned width is changed, re-establish width monitor references at LSA If clearance comparability was satisfactory prior to the course width change, re-check Procedure 1/2 configurations at LSA. Further checks at the desired higher altitude are not required if the minimum clearance levels are met.
- This check applies to the front course (and back course if it is used for an approach or missed approach).

- In some cases on commissioning type checks when the normal width does not repeat CW/ CCW within 2.5% of actual width measurements, it may be necessary to perform width measurements at an altitude higher than the lower standard altitude of 1,500 ft, or 500 ft above intervening terrain, for repeatability. In these cases, perform a width validation at a higher altitude(s). If CW/ CCW normal width can be validated at a higher altitude, all width measurements must be made at the validated higher altitude. Document the altitude on the AVNIS Datasheet. If CW/ CCW normal width difference exceeds 2.5% of actual width measurements at the higher altitude(s), the inspection should be terminated until cause of non-repeatability can be determined.
- Clearances must be checked at LSA at least every 1080 days.

(1) Course Width Formula

$$W = \frac{0.0159(ETAS)(T_{av})}{D}$$

Where:

W = Width (degrees)

ETAS = Effective True Airspeed (knots)

T_{av} = Time Average for course crossing (sec)

D = Distance from the localizer antenna to the point where the aircraft crosses the localizer course (nm to the nearest thousandth)

For manual calculation of width, average clockwise and counterclockwise runs to compensate for crosswind component.

Computed true airspeed (TAS) may be used if correction for crosswind component is applied

(2) Localizer Tailored Width Formula

$$W = 2\left(\arctan\left(\frac{350}{D}\right)\right)$$

Where:

W = Tailored Width (degrees)

D = Distance from the localizer antenna to the runway threshold (ft)

g. Clearance. Clearances ensure that the facility provides adequate off-course indications throughout the facilities service volume.

(1) General Information

Maneuver	Localizer	AFIS	Analysis
Conduct clearance checks between 6 and 10 miles from the antenna at LSA. Periodic checks may be checked up to 14 miles from the antenna. Verify unusual/out-of-tolerance indications inside 10 miles.	Course Normal, *Clearance Normal	ILS-1	Clearances are the lowest crosspointer µA value between service volume and the course sector 1 linear increase.

(* Dual Freq Only)

Other Considerations

- Deviations in any sector less than 100µA are not acceptable.
- Momentary crosspointer deflections to less than the tolerance are acceptable in sectors 2 and 3, provided the aggregate area does not exceed 3° of arc in one quadrant. One quadrant is defined as that area between the localizer on-course and a point 90° to the antenna. This exception is acceptable on the front course and back course and on both sides of the localizer course.
- Inspections to remove a restriction based on clearances must include a check of all clearance commissioning configurations.
- Clearance checks at the LSA are recommended and should be attempted on all inspections.
- Verify clearances at LSA at least every 1,080 days and when LSA is lowered. This determines if environmental changes affect clearances at the LSA while not affecting clearances at the higher altitudes. Fly a clearance run (normal or alarm) at LSA. Values less than 200 µA may indicated a potential clearance problem; however, if the minimum clearances required to authorize checks at higher altitudes are maintained at the LSA, higher altitudes may continue to be used.
- If a localizer is restricted in Sector 2, it may still support a procedure turn, as long as the instrument flight procedure does not use the restricted area and satisfactory performance of the procedure turn is confirmed by flight inspection.

- Momentary deviations of the localizer cross pointer in Sector 1 can be averaged without further evaluation, provided the cross pointer deviation does not present a noticeable effect on flyability or create a possible false course. Reversals of trend or excessive irregular flattening of the course ("steps") require an evaluation of the effect on the procedure. When this condition occurs, refly the sector 1 arc on one transmitter at the standard service volume limit at 2,000 ft above the threshold elevation, or 1,000 ft above intervening terrain, whichever is higher at a maximum ground speed of 170 knots. Evaluate for noticeable effects on flyability and possible false course indications. Remove the procedure if reversals of trend have noticeable effects on flyability or flyable false course indications occur. If the check is satisfactory for flyability, document the facility data sheet.

(2) Clearance Comparability. Clearance comparability allows localizer width, symmetry, and clearances measurements at altitudes higher than LSA(e.g., weather, restricted airspace, ATC limitation, etc.). Clearance comparability is separated into two procedures, Procedure 1 and Procedure 2.

(a) General Information

1 Comparability is required in unrestricted areas of coverage and on one transmitter only.

2 Check comparability on commissioning and when a new type antenna is installed/ replaced.

3 After commissioning, higher altitudes may be used, provided a comparability check is made (usually at commissioning) at the LSA and higher altitude to document clearances.

4 Document the AVNIS datasheet.

(b) Procedure 1. Use Procedure 1 for all facilities, unless the lowest clearance condition configuration at the desired higher altitude produces clearances higher than the same configuration at LSA.

Step	Maneuver	Localizer	AFIS	Analysis
1	Check clearances in normal	Course Normal, *Clearance Normal	ILS-1	Sector 2 clearances ≤ 165µA, future checks must be performed at LSA
2	Check clearances in monitor reference configurations at LSA	Width monitor alarm configurations	ILS-1	Sector 2 clearances ≤ 150µA, future checks must be performed at LSA
3	Check clearances in monitor reference configuration at desired higher altitude.	Lowest clearance configuration found in Step 2	ILS-1	Sector 2 clearances ≤ the clearances found in Step 2, future checks must be performed at LSA
4	Check clearances in normal at desired higher altitude.	Course Normal, *Clearance Normal	ILS-1	This must be completed if Steps 1 through 3 are satisfactory.
5	Check clearances at the wide reference (course wide clearance wide for dual frequency facility) at desired higher altitude.	Course Wide, *Clearance Wide	ILS-1	This must be completed if Steps 1 through 3 are satisfactory, and if Step 3 is not Course Wide, *Clearance Wide.

(* Dual Freq Only)

Other Considerations. If the clearances are greater than the µA value listed in analysis for Step 1 through 3, proceed to the next step.

(c) Procedure 2. Procedure 2 authorizes slightly higher clearances at the desired altitude than at LSA, but can only be used if the more stringent clearance tolerances are applied at the LSA.

Step	Maneuver	Localizer	AFIS	Analysis
1	Check clearances in normal	Course Normal, *Clearance Normal	ILS-1	Sector 2 clearances ≤ 180µA, future checks must be performed at LSA
2	Check clearances in monitor reference configurations at LSA	Width monitor alarm configurations	ILS-1	Sector 2 clearances ≤ 160µA, future checks must be performed at LSA
3	Check clearances in the monitor reference configuration at desired higher altitude	Lowest clearance configuration found in Step 2	ILS-1	Sector 2 clearances > 20µA to the clearances found in Step 2, future checks must be performed at LSA
4	Check clearances in normal at desired higher altitude	Course Normal, *Clearance Normal	ILS-1	This must be completed if Steps 1 through 3 are satisfactory.
5	Check clearances at the wide reference (course wide clearance wide for dual frequency facility) at desired higher altitude.	Course Wide, *Clearance Wide	ILS-1	This must be completed if Steps 1 through 3 are satisfactory, and if Step 3 is not Course Wide, *Clearance Wide.

(* Dual Freq Only)

Other Considerations. Facilities documented with Procedure 2 comparability must be re-checked at LSA if clearances are less than 160µA in any configuration on any periodic check. If the re-check at LSA is satisfactory, the comparability check must be re-accomplished, or altitudes other than the LSA will not be used to check clearances.

h. Alignment and Structure. These checks measure the quality and alignment of the on-course signal.

(1) General Information

(a) The alignment and structure checks are usually performed simultaneously; therefore, use the same procedures to check alignment and structure.

(b) Structure and alignment applies to the front course (and the back course if it is used for an approach or missed approach).

(c) For localizers aligned along the runway centerline, the aircraft may be positioned along the runway centerline by visual cues, or theodolite. Fly the localizer on-course signal when RTT or AFIS equipment is used.

(2) ILS Structure Evaluations

Maneuver	Localizer	AFIS	Analysis
Maintain the published or proposed procedural altitudes through each segment of the approach and then descend on the glidepath to Point C or runway threshold and conduct a low approach at 50 to 100 ft above the surface to the runway end.	Course Normal, *Clearance Normal	ILS-3	For unrestricted facility operation (1) used the following guidance: Category III check Zones 1,2,3,4,5 Category II check Zones 1,2,3,4 Category I and other types of facilities and approaches check Zones 1,2,3

(* Dual Freq Only)

NOTE 1: During site, commissioning, reconfiguration, categorization, antenna, and/or frequency change inspection, check all of Zone 1. For all other inspections (i.e., periodic, periodic with monitors, etc.), evaluate structure from GSI or the FAF (whichever is further) through all other required zones

NOTE 2: Category II localizers failing to meet structure tolerance in Zone 4 will not be shown as restricted on the flight inspection report; however, a NOTAM will be issued. .

Other Considerations. All ILS localizers sited on the extended runway centerline must be inspected and analyzed through Zones 1, 2, 3, 4 and 5 (runways less than 5,000 ft long do not have Zone 5) on all inspections requiring alignment or structure validation. These localizers must be classified according to the furthest point at which the structure conforms to Category III structure tolerances. This classification is for autoland authorization. Other facilities must be inspected and analyzed in Zones 1, 2, and 3. If rollout has not been accomplished, facility cannot be classified higher than point "T".

(3) Localizer Alignment

<table>
<tr><th>Maneuver</th><th>Localizer</th><th>AFIS</th><th>Analysis</th></tr>
<tr><td>Maneuver the same as in Table h. (1)</td><td>Course Norm,
*Clearance Norm</td><td>ILS-3</td><td>
<table>
<tr><th>Front Course</th><th>From</th><th>To</th></tr>
<tr><td>CAT I, II, III</td><td>One mile from runway threshold</td><td>Runway threshold</td></tr>
<tr><td>ILS Zone 4</td><td>Runway threshold</td><td>Point D</td></tr>
<tr><td>ILS Zone 5</td><td>Point D</td><td>Point E</td></tr>
<tr><td>Offset Localizers</td><td>One mile from runway threshold</td><td>Runway threshold or abeam runway threshold</td></tr>
<tr><td>LDAs and SDFs</td><td>One mile from Point C</td><td>Point C</td></tr>
<tr><td>Back Course</td><td></td><td></td></tr>
<tr><td>All Types of Facilities</td><td>Two miles from the antenna</td><td>One mile from the antenna</td></tr>
</table>
</td></tr>
</table>

(* Dual Freq Only)

Other Considerations

- FAA and U.S. Non-Federal civil facilities, alignment must meet the "Initial" maintenance tolerance any time alignment is adjusted, or at the end of a Periodic with monitors inspection.
- When a restriction occurs in an area where alignment is normally analyzed, measure average course alignment manually or with AFIS in the following areas:

From	TO
One Mile from start of the restriction	The start of the restriction

- LDA(s) oriented toward a nondescript point-in-space where adequate visual checkpoints are not available and AFIS runway updates are impractical, the alignment on commissioning type inspections must be determined using Differential GPS AFIS "truth system", pseudo runway development or theodolite. Flight Inspection Policy must approve in advance pseudo runway development based on surveyed airport checkpoints (runway ends, taxiways, etc.). Establish an equality of modulation reference for subsequent alignment and monitor comparison. During subsequent periodic inspections, where AFIS updates are impractical, the localizer alignment may be determined to be either Satisfactory (S) or Unsatisfactory (U), in lieu of course alignment values. If the actual alignment is required (i.e., SOIA,), the use of Differential GPS AFIS "truth system", theodolite, or pseudo runway development is required.
- For facilities not aligned along runway centerline, evaluate alignment with theodolite, RTT, or AFIS

(4) Localizer Only Structure Evaluations

Maneuver	Localizer	AFIS	Analysis
Maintain published altitudes in each segment prior to the final segment. Fly the final segment as follows: upon reaching the FAF inbound, descend at a rate of approximately 400 ft per mile (930 ft per minute at 140 knots; 800 ft per minute at 120 knots) to an altitude of 100 ft below the lowest published MDA and maintain this altitude to point C, which is the MAP.	Course Normal, *Clearance Normal	ILS-3	Analyze structure in Zones 1, 2, and 3.

(* Dual Freq Only)

Other Considerations

- See Appendix 1 for the definition of Point C for localizer only approaches.
- For ILS approaches which support localizer-only minima, the procedure specified in (4) above must be used in addition to the run on normal glidepath during the following inspections: site, commissioning, and specials for antenna system change, user complaint or site modifications, and on a periodic inspection any time there is significant deterioration of localizer structure.

(5) Roll-Out Procedures

Maneuver	Localizer	AFIS	Analysis
Cross Point C at 100 ft, runway threshold at approximately 50 ft, and continue on the extended glidepath angle to the touchdown point. Continue the landing roll to the runway end.	Course Normal, *Clearance Normal	ILS-3	Measure course structure from the alignment found in the respective zone (i.e., measure Zone 4 structure from the alignment found in Zone 4 and measure Zone 5 structure from the alignment found in Zone 5)

(* Dual Freq Only)

Other Considerations

- Rollout procedures are required for all Category II/ III localizers. They are also required for all Category I localizers installed at Part 139 airports with runway lengths of 5,000 ft or greater. Offset localizers, and facilities currently with a classification of I/ A, B, or C, need not be checked. Rollout checks and the 50 ft ILS-3 comparison checks are required on both transmitters.
- If Zone 4 and Zone 5 alignment cannot be determined using the method above in the table, taxi the aircraft along the runway centerline from abeam the glide slope to point E. Record the raw crosspointer and mark abeam the glide slope, Point D, and Point E. Manually calculate the alignment and structure in Zone 4 and Zone 5.
- Compare the results of the 50 ft run and the landing roll. If the results of the 50 ft run do not accurately reflect that achieved during roll-out checks, document that structure analysis of Zones 4 and 5 must be roll-out checked on future inspections. Refer to Appendix 2 of Order 8240.52, Aeronautical Data Management, for documentation procedure.
- During Periodic or Special inspections, which require structure analysis, use the procedure in the table above, except conduct a 50 to 100 ft low approach on runway centerline, throughout the required zones. If the aircraft cannot maintain centerline for evaluations of Zones 4 and 5 due to wind conditions, the evaluation may be conducted by taxiing the aircraft down centerline throughout Zones 4 and 5.
- If structure appears to have deteriorated since the previous inspection, or if out-of-tolerance structure is found, verify the results of this check by flying the procedure in (4) above.

i. Polarization. Polarization determines the effects of vertical polarization on the course structure.

Maneuver	Localizer	AFIS	Analysis
Fly inbound on-course within unrestricted coverage prior to the FAF and roll the aircraft to 20° bank left and right.	Course Normal, *Clearance Normal	ILS-3	Analyze course structure

(* Dual Freq Only)

Other Considerations

- Actuate the event mark at the maximum-banked attitude.
- Accomplish the polarization check on both the front course and back course (if procedurally used) and may be checked concurrently with the course structure check.
- Polarization check is only required on one transmitter.

j. Monitor References. These checks determine that the localizer meets specified tolerances while in abnormal configurations.

(1) General Information

(a) The inspector must ensure that the facility is set at the monitor reference prior to each check.

(b) Monitor references must be checked IAW FAA Order 8200.1, Chapter 15

(2) Width Monitor Reference

Maneuver	Localizer	AFIS	Analysis
Between 6 - 10 miles from the localizer antenna (10 nm being optimum) at the LSA.	The appropriate configuration IAW the Checklist	ILS-1	Analyze width and clearances

Other Considerations. At the conclusion of any width monitor inspection, return the facility to normal, check and report the resulting course sector width and symmetry.

k. Alignment Monitor Reference. This check ensures the monitors will detect a shift of the localizer course. The applicable Technical Operations Service Area must pre-approve flight inspection of this parameter.

(1) General Information

(a) Alignment monitors may be completed on the ground, in the air, or by the modulation equality method. The best practice is to complete the alignment monitors on the ground.

(b) Request the course be misaligned to the monitor alarm limits each side (90 Hz/ 150Hz) of the operational course.

(c) **Use** both the recorder and the visual display to verify course alignment shifts.

(d) **Reference** monitor limits to the procedural on-course alignment.

(e) It is not necessary to verify ground alignment monitors checks in the air or to verify airborne alignment monitor checks on the ground.

(2) Ground Alignment Monitors

Step	Maneuver	Localizer	AFIS	Analysis
1	Determine the airborne alignment	Course Normal, *Clearance Normal	ILS-3	Measure course alignment
2	Position the aircraft near the runway threshold where a stable crosspointer is received. The aircraft may be displaced as much as 75µA from the on-course signal (providing the sensitivity of the course sector width is linear).	Request maintenance shift the course to both of the monitor limit points and then return to normal.	ILS-3	Reference the received course indication to the alignment found airborne from Step 1 of this table.

(* Dual Freq Only)

Other Considerations

- For facilities that are installed offset to the runway, the alignment monitor limits may be established with the aircraft on the ground within 75µA of the on-course signal; but the aircraft must not be positioned closer than 3,000 ft from the antenna array. If these two conditions cannot be met, perform this check in the air.
- If alignment monitors are initially checked on the ground and alignment is then adjusted based on airborne analysis, a monitor recheck is not required, providing the following criteria are met:
    - In-tolerance flag/ modulation and AGC exist.
    - Crosspointer is stable.
    - Crosspointer data is recorded as found during adjustment and at the final setting.
    - The monitor shift on the ground, when applied to the new airborne alignment, is in tolerance.
    - Monitor settings are not changed after the alignment is adjusted.

(3) Airborne Alignment Monitors may be checked by two methods. Method 1 uses the corrected error trace, and Method 2 uses the raw crosspointer.

(a) Method 1

Maneuver	Localizer	AFIS	Analysis
Start at 7-5 nm from the threshold. Using visual cues, align the aircraft to the runway centerline.	Between 3.5 and 1.5 nm from the threshold, request alignment shifts in both directions and then back to normal. Shifts must be completed and facility in normal by 1.5 nm to allow AFIS to measure alignment properly.	ILS-3	The alignment shifts will be determined by analyzing the Zone 2 corrected error trace. The Zone 2 shifts will be from the actual alignment, so the Mission Specialist will have to draw a line indicating the correct procedural azimuth. To find the correct procedural azimuth, take the inverse of the localizer alignment box and draw a line throughout Zone 2 corrected error trace. The alignment shifts will be from the line drawn.

(b) Method 2

Maneuver	Localizer	AFIS	Analysis
Start at 7-5 nm from the threshold. Using visual cues align the aircraft to the runway centerline.	Request alignment shifts in both directions and then back to normal.	ILS-3	The alignment shifts will be determined by analyzing the instantaneous course displacements or course shifts as referenced to runway centerline extended.

Other Considerations

- Perform airborne alignment monitor checks while inbound on the designed procedural azimuth (on localizers aligned along runway centerline, the aircraft should be aligned with the centerline extended).
- If feasible, accomplish check on one run during which both limit points and a return to normal are recorded.

l. Equality of Modulation. If course alignment is satisfactory and a monitor inspection is required, localizers may be evaluated for monitor references using equality of modulation method. This method may be used on all categories of localizer with the concurrence of maintenance personnel.

Warning: Hazardous and Misleading Information
Misleading information is produced by this configuration. Ensure NOTAM is active. Monitor ATC communications for improper clearances to other aircraft.

Step	Maneuver	Localizer	AFIS	Analysis
1	Determine the airborne alignment	Course Normal, *Clearance Normal	ILS-3	Measure course alignment
2	Position the aircraft on the ground or in the air within the course sector (35°-35° on a single frequency and approximately 7°-7° on a dual frequency facility)	Have maintenance place the course transmitter to modulation balance and *clearance in normal. Have maintenance shift the alignment in both directions. Then restore system to normal.	ILS-3	Record the modulation equality value with zero alignment shift; this will become the reference value. Compute the alignment shifts by taking the difference between the reference value and the alignment shifts. The amount of deflection must then be algebraically added to the localizer alignment.

(* Dual Freq Only)

Other Considerations. Use of this method requires a remark on the flight inspection report.

m. RF Power Monitor Reference. Conduct this check to determine that the localizer meets specified tolerances throughout the service volume while operating in reduced power.

Step	Maneuver	Localizer	AFIS	Analysis
1	Fly a 10°-10° arc across the localizer course at 18 nm (25 nm for ICAO Service Volumes) from the localizer antenna at 4,500 ft above antenna elevation. **See Note 1**	Course Reduced RF Power, *Clearance Reduced RF Power	ILS-1	Check for interference, signal strength, clearances, flag alarm, and identification.
2	Fly a 10°-10° arc across the localizer course at 18 nm (25 nm for ICAO Service Volumes) from the localizer antenna at 2,000 ft above the threshold elevation or 1,000 ft above intervening terrain, whichever is highest. **See Note 2**	Course Reduced RF Power, *Clearance Reduced RF Power	ILS-1	Check for interference, signal strength, clearances, flag alarm, and identification.
3	Proceed on course, inbound from 18 nm (25 nm for ICAO Service Volumes) from the localizer antenna at 2,000 ft above threshold or 1,000 ft above intervening terrain, whichever is higher, until reaching 7° above the horizontal (measured from the localizer antenna) or Point C, whichever occurs last.	Course Reduced RF Power, *Clearance Reduced RF Power	ILS-3	Check for interference, signal strength, flag alarm, structure, and identification
4	Fly a 35°-35° arc across the localizer course at 10nm (17nm for ICAO Service Volumes) from the Localizer antenna at the LSA. **See Note 3**	Course Reduced RF Power, *Clearance Reduced RF Power	ILS-1	Check for interference, signal strength, clearances, flag alarm, and identification.

(* Dual Freq Only)

NOTE 1: If, due to intervening terrain, the LSA is higher than 4,500 ft above antenna elevation, the localizer must be restricted. Attempt to determine a distance where terrain clearance is within the SSV for a localizer restriction distance.

NOTE 2: If 1,000 ft above intervening terrain is higher than 4,500 ft above site antenna elevation, the localizer must be restricted. Determine a distance where terrain clearance is within the SSV for a localizer restriction distance. The facility must have an ESV for use outside the SSV.

NOTE 3: Altitude is intended to be level. If unable to maintain minimum terrain clearance within the SSV, restrict the facility accordingly.

Other Considerations

- This procedure applies to the front course (and back course if it is used for an approach or missed approach).
- If in-tolerance coverage cannot be maintained up to 7° as required by Step 3, the localizer may still be used for CAT I and non-precision operations on a restricted basis. However, the localizer must be classified as "unusable" if in-tolerance coverage cannot be maintained up to 4° or 1° greater than the commissioned glidepath angle, whichever is greater (both measured from the localizer).
- If vertical angle coverage is limited but the localizer can be used on a restricted basis as outlined above, a NOTAM must be issued which restricts the localizer as "unusable" above a specified altitude, both at the threshold and at least one other point, usually the FAF (see NOTAM SECTION). Note the angle at which unsatisfactory coverage occurred and evaluate its effect on the non-precision MDA, Maximum holding altitudes, and missed approach instructions/protected areas.
- Restrictions to localizer coverage at a distances less than the standard service volume are permitted, provided the localizer meets all coverage tolerances throughout all procedural approach segments and at the maximum distance at which the procedure turn may be completed.
- Restrictions above the LSA are acceptable, provided a step-down fix, etc., can be added to the appropriate approach segment which restricts descent to within the altitude/ distance at which acceptable coverage at the LSA was achieved.

n. High Angle Clearance. This check determines that the transmitted signals provide proper off-course indications at the upper limit of the service volume. This applies to the front course (and back course if procedurally used).

Maneuver	Localizer	AFIS	Analysis
Fly a 10 nm (17 nm for ICAO Service Volumes) arc through Sectors 1 and 2 (and 3, if procedurally required), at 4,500 ft above antenna elevation.	Course Normal, *Clearance Normal	ILS-1	Check clearances and modulation

(* Dual Freq Only)

Other Considerations

- This check is only required on one transmitter.
- If clearances are out-of-tolerance, conduct additional checks at decreasing altitudes to determine the highest altitude at which the facility may be used.
- Check High Angle Clearances during site evaluation, commissioning, or for a change in location, height, or type of antenna.

o. Dephase. This is a maintenance request check, and it verifies the facility's phasing.

Maneuver	Localizer	AFIS	Analysis
Fly inbound toward the antenna on the appropriate azimuth at LSA between 10 and 3 miles	The appropriate configuration IAW the Checklist	ILS-1	Optimum quadrature phase condition when microampere deflection is the same as that found when checking modulation equality.

Other Considerations. Maintenance compares the widths between advance phase and retard phase to determine if any further adjustments are required.

p. Standby Equipment. When dual equipment is installed, complete all checklist items for both sets of equipment, except as noted in the text and the checklist. For FAA and U.S. Non-Federal civil facilities, standby transmitters should match the reference transmitter within the prescribed equality in normal maintenance limits during the same flight inspection. This applies to all type inspections when both primary and standby transmitters are evaluated in normal. If Maintenance is unable to adjust the transmitter within equality limits and the transmitter meets the flight inspection tolerances in FAA Order 8200.1C, Chapter 15, the transmitter may remain in service unless maintenance elects to remove it from service. Refer to the tables in Paragraph 15.12b for equality in normal values.

Maneuver	Localizer	AFIS	Analysis
See the appropriate section for the check required.	Ensure that the facility is on the standby transmitter.	ILS-1 and ILS-3	The standby transmitter will be inspected the same as the primary transmitter.

Other Considerations

- When completing a periodic with monitor check, perform a periodic on both the primary and standby equipment, and a monitor check on one transmitter. Facilities that have dual parallel monitors require a monitor evaluation on one transmitter only. Facilities that have two individual monitors require monitor evaluations on each transmitter.
- Check normal localizer width prior to checking the monitor configurations.

q. Standby Power. This check verifies that the ground facility operates properly on back-up power.

Maneuver	Localizer	AFIS	Analysis
See the appropriate section for the type check.	Ensure that the facility is on the standby power.	ILS-1 and ILS-3	Check course width, alignment, symmetry, modulation, and identification.

Other Considerations. Standby power checks are not required for facilities powered by batteries (Floating Batteries) that are constantly charged by another power source.

r. Reporting Fixes, SID(s)/ DP(s), STAR(s), and Profile Descents. The localizer, SDF, or LDA may be used to support fixes, or departure, en route, and arrival procedures. Check these items during a commissioning inspection, when new procedures are developed or re-described, or on appropriate special inspections (e.g., user complaints) Facility performance of all facilities involved must be checked to ensure that all coverage parameters are within tolerance.

(1) Reporting Fixes. When fixes are located within the RHO-THETA FISSV and ILS SSV, coverage throughout the fix displacement area can be predicted (fix displacement evaluation is not required). If the fix is not contained within the localizer and/or glide slope SSV, establish an ESV to support the procedure. Refer to Chapter 22 for ESV information. The following are the required coverage checks.

Figure 15-2
Fix Coverage Requirements

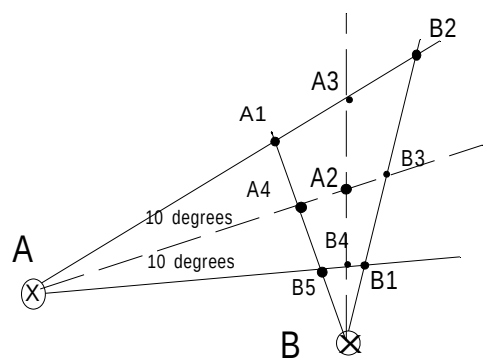

(a) Localizer (A) B1 to B2. This requirement is satisfied by service volume validation and need not be repeated.

(b) Rho-Theta (Radial ± 4.5°) or NDB (Bearing ± 5°) facility (B) check A1 to B2. Does not have to be checked if within the VOR/ NDB FISSV.

(c) Rho-Theta or NDB facility (B) A3 to B4

(2) SID(s)/ DP(s). Check on-course structure throughout the area of intended use. Check clearance in Sector 1 at the termination point at the minimum authorized altitude.

(3) STAR(s) and Profile Descents. Fly these procedures as proposed or as published. Check facility performance when checking STAR(s) and profile descents in accordance with Paragraphs (1) and (2) above.

SECTION 3. GLIDE SLOPE

15.30 FLIGHT INSPECTION PROCEDURES

a. Modulation Level. This check measures the modulation of the radiated signal.

Maneuvering	Glide Slope	AFIS	Analysis
ILS-3	Normal	ILS-3	Measure the average modulation percentage between 7 and 3 miles from the glide slope antenna with a signal strength of 150 µV or greater.

Other considerations. The AFIS will report the average modulation between 5 and 3 miles with the crosspointer within 30µA. The AFIS announced results should be confirmed graphically.

b. Modulation Equality. This check establishes the balance of the carrier signals.

Warning:
Hazardous and Misleading Information
Misleading information is produced by this configuration. Ensure NOTAM is active. Monitor ATC communications for improper clearances to other aircraft.

Maneuvering	Glide Slope	AFIS	Analysis
ILS-3	Maintenance will configure the facility to radiate carrier signal only. *When checking capture effect facilities, the primary transmitter radiates carrier only while the clearance transmitter is off or in dummy load.*	ILS-3	Measure the modulation equality between 7 and 3 miles from the glide slope antenna with a signal strength of 150 µV or greater. Record raw data. While descending, call out the balance to facilities maintenance personnel. Zero µA is optimum. Adjust an imbalance in excess of 5µA towards optimum.

Other considerations. Make this check prior to any phasing checks and use as a reference during phasing.

c. Phasing. This check determines the correct carrier and sideband phase relationship distribution to the antennas.

Warning:
Hazardous and Misleading Information
Misleading information is produced by this configuration. Ensure NOTAM is active.
Monitor ATC communications for improper clearances to other aircraft.

Prior to any phasing checks, the glide slope modulation level and modulation equality must be properly set and checked.

Prior to airborne phasing, confirm that maintenance has established normal carrier to sideband ratios and that ground phasing is complete.

Maintenance should use measured/ fixed line lengths to de-phase the glide slope, rather than using variable phasers.

(1) Null Reference Phasing

Maneuvering	Glide Slope	AFIS	Analysis
Proceed inbound from 10 miles from the glide slope antenna along the localizer procedural ground track, at 1/3 to ½ of the glide path angle. Maintain an angular descent until reaching threshold.	Maintenance personnel will configure the facility to radiate the sidebands in quadrature to the carrier.	ILS-3	Record raw data. Relay the crosspointer indications to maintenance and have them adjust the phaser until the crosspointer is centered about the value found during the modulation equality check.

Other considerations. Do not make facility adjustments inside 4 miles during the angular descent. If the µA value varies from the average between 1/2 mile from the threshold and runway threshold, the antenna offset may be incorrect and should be checked (antenna offset is most accurately established and set by maintenance).

(2) Sideband reference

Step	Maneuvering	Glide Slope	AFIS	Analysis
1	Conduct a level run at 1,000 ft above antenna elevation between 10 to 5 miles from the glide slope antenna.	Maintenance will dummy load the upper antenna feed and insert a 90° section in the main sideband line.	ILS-3	Record raw data. Relay the crosspointer indications to maintenance and have them adjust the phaser until the crosspointer is centered about the value found during the modulation equality check.
2	Conduct a level run at 1,000 ft above antenna elevation between 10 to 5 miles from the glide slope antenna.	Maintenance will remove the 90° section. (Upper antenna will remain dummy loaded)	ILS-3	Check for full fly-down signal. This indicates that the lower antenna sensing is correct. If full fly-up signal is indicated, sensing is incorrect and the facility must be adjusted.
3	Proceed inbound from 10 miles from the glide slope antenna along the localizer procedural ground track, at 1/3 to ½ of the glide path angle. Maintain an angular descent until reaching threshold.	Have maintenance radiate upper and lower antennas with a 90° section in the main sideband phaser.	ILS-3	See Step 1

Other Considerations. Do not make facility adjustments inside 4 miles during the angular descent. If the µA value varies from the average between 1/2 mile from the threshold and runway threshold, the antenna offset may be incorrect and should be checked (antenna offset is most accurately established and set by maintenance).

(3) Capture Effect

(a) Airborne Phase Verification Procedure

Step	Maneuvering	Glide slope	AFIS	**Analysis** (expected values – not tolerances)
1	ILS-3	Normal	ILS-3	**Angle**: ± .05 of commissioned for commissioning type inspections **Structure:** in tolerance
2	ILS-2	Normal	ILS-2	**Width**: .70° +/- .03° **SBP:** ≥ 30% of commissioned angle **Symmetry:** in tolerance
3	Below path approach from the GSI to threshold. For glide slopes associated with offset localizers or LDA(s) check to point "C"	Normal	ILS-2 or ILS-3	**CBP**: ≥180 µA of fly-up signal can be maintained
4	ILS-2	Main Sideband Advanced (usually 30° is used)	ILS-2	Expect the width to widen approximately the same amount when the main sideband is in advance or retard configuration. **Width** should not exceed 0.1° sharper or 0.2° wider than normal. **Angle** should not change more than .1° **SBP:** ≥ 30% of commissioned angle
5	ILS-2	Main Sideband Retarded (usually 30° is used)	ILS-2	See step 4

Step	Maneuvering	Glide slope	AFIS	**Analysis** (expected values – not tolerances)
6	ILS-2	Middle Antenna Advanced 10-20° (usually 19° is used)	ILS-2	Expect the width to widen approximately the same amount when the middle antenna is in advance or retard configuration. **Width** should not exceed 0.1° sharper or 0.2° wider than normal **Angle** should not change more than .05°. **SBP:** ≥ 30% of commissioned angle
7	See Step 3	Middle Antenna Advanced	ILS-2 or ILS-3	**CBP**: ≥150 µA of fly-up signal can be maintained
8	ILS-2	Middle Antenna Retarded 10-20° (usually 19° is used)	ILS-2	See Step 6
9	See Step 3	Middle Antenna Retarded	ILS-2 or ILS-3	See Step 7
10	ILS-2	Normal	ILS-2	Width: .70° +/- .05°

Other considerations

- Steps 4 and 5 are required on commissioning checks, and are accomplished at maintenance request on other checks.
- For clearances, fly a recommended angle of 1.0 ° from 4 miles to runway threshold maintaining at least the minimum microamp level. If obstruction clearance is a limiting factor, an acceptable higher fixed angle may be used.
- Maintenance may also request to check the upper antenna phasing by advancing and retarding the upper antenna approximately 57°. Make measurements using the ILS-2 level run. If the upper antenna is properly phased the angle will decrease about the same amount with each direction of de-phase.
- Steps 6 -9 may be used to complete checklist items if the phasing amount was equal to or greater than the amount required for the monitor check.

(b) Airborne Phasing Procedure No. 1

Step	Maneuvering	Glide Slope	AFIS	Analysis
1	Proceed inbound from 10 miles from the glide slope antenna on the localizer procedural ground track, at ½ the angle (up to 2/3 the angle if terrain is an issue). Maintain angular descent until reaching threshold.	Have maintenance setup to phase the upper to middle antenna: **Lower antenna** - dummy loaded **Middle antenna**- Radiate carrier and sidebands **Upper antenna** – radiate sidebands **Main sideband phaser**- in quadrature **Clearance Tx**—de-energized	ILS-3	Record raw data. Relay the crosspointer indications to maintenance and have them adjust the phaser until the crosspointer is centered about the value found during the modulation equality check.
2	Proceed inbound from 10 miles from the glide slope antenna on the localizer procedural ground track, at the glide path angle until reaching threshold.	Have maintenance setup to phase the lower antenna to upper and middle antenna: **Lower antenna** - radiate carrier and sidebands **Middle antenna** – radiate carrier and sidebands **Upper antenna** – radiate sidebands **Main sideband phaser**- in quadrature **Clearance Tx**—de-energized	ILS-3	See Sep 1

Other considerations

- Do not make facility adjustments inside 4 miles during the angular descent. If μA value varies from the average between 1/2 mile from the threshold and runway threshold, the antenna offset may be incorrect and should be checked (antenna offset is most accurately established and set by maintenance).
- After completed airborne phasing, complete phase verification.

(c) Airborne Phasing Procedure No. 2 (most commonly used)

Step	Maneuvering	Glide Slope	AFIS	Analysis
1	Proceed inbound from 10 miles from the glide slope antenna on the localizer procedural ground track, at ½ the angle (up to 2/3 the angle if terrain is an issue). Maintain angular descent until reaching threshold.	Have maintenance setup to phase the lower to middle antenna: **Lower antenna** – radiate carrier only **Middle antenna** – radiate sidebands only **Upper antenna** – dummy loaded **Main sideband phaser**- in quadrature **Clearance Tx**—de-energized	ILS-3	Record raw data. Relay the crosspointer indications to maintenance and have them adjust the phaser until the crosspointer is centered about the value found during the modulation equality check.
2	Proceed inbound from 10 miles from the glide slope antenna on the localizer procedural ground track, at the glide path angle until reaching threshold.	Have maintenance setup to phase the lower antenna to the upper antenna. **Lower antenna** - radiate carrier only **Middle antenna** – dummy loaded **Upper antenna** – radiate sidebands only **Main sideband phaser**- in quadrature **Clearance Tx**—de-energized	ILS-3	See Step 1

Other considerations

- Procedure 2 only applies to those facilities in which it is possible to separate carrier and sideband signals in the Amplitude and Phase control Unit (APCU).

- Do not make facility adjustments inside 4 miles during the angular descent. If µA value varies from the average between 1/2 mile from the threshold and runway threshold, the antenna offset may be incorrect and should be checked (antenna offset is most accurately established and set by maintenance).

- After completed airborne phasing, complete phase verification.

d. Null Check. The antenna null check is an engineering support check and is conducted at engineering/ maintenance personnel request. This check measures the vertical angles at which the nulls of the individual glide path antennas occur. It can be conducted on all image array systems. No procedures exist for the non-image arrays.

Warning:
Hazardous and Misleading Information
Misleading information is produced by this configuration. Ensure NOTAM is active.
Monitor ATC communications for improper clearances to other aircraft.

Maneuvering	Glide Slope	AFIS	Analysis
ILS-2	Have maintenance radiate carrier only from the antenna to be tested.	ILS-2	Measure angles from the nulls that appear on the recording as dips in the AGC.

Other considerations

- A level run and analysis should be made for each antenna.
- In the case of the first null of the upper antenna of a capture effect glide slope, the AGC dips are broad. Angle measurements can be accomplished by measuring the second and/or third null.

Alternate procedure: On a capture effect glide slope, maintenance may want to check antenna nulls by configuring the facility as a null reference.

Step	Maneuvering	Glide Slope	AFIS	Analysis
1	ILS-2	Have maintenance radiate carrier only from the lower antenna	ILS-2	Measure the angle from the null that appear on the recording as a dip in the AGC. Angle should be ½ the commissioned angle.
2	ILS-3	Have maintenance set up as null reference configuration: Lower antenna – radiate carrier + sidebands Middle antenna – radiate sidebands only	ILS-3	Measure the angle – should be the same as the commissioned angle.
3	ILS-3	Have maintenance set up as null reference configuration: Lower antenna – radiate carrier + sidebands Upper antenna – radiate sidebands only	ILS-3	Measure the angle – should be 2/3 the commissioned angle.

e. Antenna Offset. Perform this check to establish the horizontal antenna displacements on the mast. Offset affects the phase relationship of the glidepath signal as the aircraft approaches the runway threshold. Improper offset may cause low clearances, and/or a fly-down signal between Point B and the runway threshold Antenna offsets can be accurately determined and positioned by facilities maintenance personnel without flight inspection assistance.

Prior to checking the antenna offset, check the phasing.

Warning:
Hazardous and Misleading Information
Misleading information is produced by this configuration. Ensure NOTAM is active.
Monitor ATC communications for improper clearances to other aircraft.

Maneuvering	Glide Slope	AFIS	Analysis
Park the aircraft on centerline at the runway threshold.	Maintenance will configure the facility to radiate the sidebands in quadrature to the carrier.	ILS-3	Record raw crosspointer. As the antennas are being adjusted, relay crosspointer indications to the Facilities Maintenance personnel. The optimum setting is the same as the displacement found during the phasing check.

Other considerations

- The top antenna should be closest to the runway.
- When the antenna is secured and personnel are not on the mast, take a final reading.
- Check the effects of the antenna offset adjustment in the far and near fields by performing another phasing check.
- If the crosspointer is not stable when the aircraft is parked at the runway threshold, the antenna offset cannot be established on the ground. In this case: have maintenance adjust the antenna offset based on the final phasing run then re-fly the last 3,000 ft to the runway threshold. Compare the crosspointer to the indications found prior to the antenna adjustment.

f. Spurious Radiation. Perform this check to determine if any glide slope signal exists in the final approach segment with the facility configured in dummy load.

Maneuvering	Glide Slope	AFIS	Analysis
ILS-3 from at least 4 nm	Have maintenance dummy load the facility	ILS-3	Using a spectrum analyzer or the glide slope receiver traces, compare any signals that are received during the approach with the results found while the facility is transmitting normally.

g. Angle. Two methods are used to determine the glidepath angle. They are the level run method and the actual path angle method.

(1) ILS-2 Level-Run Method: Use this method for measuring the glidepath angle during monitor checks (for any ILS category), engineering support checks, etc.

Maneuvering	Glide Slope	AFIS	Analysis
ILS-2	Normal or other configuration	ILS-2	Measure the angle that the crosspointer intersects the 0 µA baseline.

Other considerations

- The level run method may be used for periodic inspections of the glidepath angle of CAT I facilities.
- The algebraic difference between the NORMAL ILS-3 angle and the NORMAL ILS-2 angle becomes a **correction factor.** Apply the correction factor to all subsequent ILS-2 monitor angles.
- **ILS-2 manual method:** During the inbound run, mark checkpoints or DME distances with the event mark and identify them on the recording. Checkpoints are normally the outer marker and the glide slope antenna; however, any two checkpoints separated by a known distance may be used. The angle is calculated from these values.

$$\text{Measured Angle} = \frac{\mathbf{A1}}{\mathbf{106 \times D}}$$

Where:

A1 = Tapeline altitude in feet
D = Distance in nautical miles from the glide slope

(2) ILS-3 Zone 2 Actual Path Angle. The actual path angle method is used to measure the path angle during site, commissioning, after-accident inspections, special inspections at maintenance request, and confirmation of out-of-tolerance conditions for Category I glide slopes. Use during any inspection to determine the reported angle for Category II and III glide slopes.

Maneuvering	Glide Slope	AFIS	Analysis
ILS-3	Normal or other configuration	ILS-3	Measure ILS Zone 2

h. Width. Obtain path width measurements of the half ILS glidepath width sector from ILS-2 level runs.

Maneuvering	Glide Slope	AFIS	Analysis
ILS-2	Normal or other configuration	ILS-2	Measure the difference in the angles where the crosspointer intersects the 150 Hz and 90 Hz 75µa points

Other considerations

- The 75µA points are normally used as the measurement points for the width. Some facilities have step characteristics of the cross pointer transition, which may preclude the use of the 75µA points. Check data sheet remarks for non-standard width measurement area.
- When steps are encountered, the following procedure is recommended to determine which level run measurement points should be used for path width analysis:
  - Perform a mean width check IAW Paragraph l.
  - Fly a normal level run using 60µA measurement points.
  - Fly a normal level run using 90µA measurement points.

On subsequent level runs, use the measurements points that most closely match the path width results measured on the mean width check. If a point other than 75 µA is used to measure path widths, that point must be used on all subsequent checks and inspections. . If the steps continue to affect the level run results, consider another altitude, or evaluate all Normal and monitor reference widths using the mean width method.

- The **AFIS** width measurement point defaults to 75µA; however, any value from 60µA to 90µA can be used as described above.
- When a point other than 75µA is used, the new point must be documented on the AVNIS datasheet and used in all subsequent inspections.
- **ILS-2 manual method:** During the inbound run, mark checkpoints or DME distances with the event mark and identify them on the recording. Checkpoints are normally the outer marker and the glide slope antenna; however, any two checkpoints separated by a known distance may be used. The width is calculated from these values.

$$\frac{\mathbf{A1}}{\mathbf{106 \times D \text{ of } 75\mu A/90hz}} - \frac{\mathbf{A1}}{\mathbf{106 \times D \text{ of } 75\mu A/150hz}}$$

Where:

A1 = Tapeline altitude in feet
D = Distance in nautical miles from the glide slope

i. Symmetry. Symmetry is the balance of the 2 sectors, 90Hz/ 150Hz. The glidepath should be as symmetrical as possible; however, there normally is some imbalance.

Maneuvering	Glide Slope	AFIS	Analysis
ILS-2	Normal	ILS-2	Measure the angle that the crosspointer intersects the 150 Hz/ 75µa point, the 0µA baseline and the 90 Hz/ 75µA point. Symmetry is calculated as the percent 90 Hz of the total width. Symmetry = 90 Hz width / Total width

Other considerations

- If points other than the 75µA points are used for measuring the path width, they must also be used for the symmetry measurements.
- If the level run symmetry is out of tolerance, determine the mean symmetry (see Paragraph l., Mean Width). Apply the mean symmetry as a correction factor to level runs; annotate on the AVNIS data sheet.

j. Structure-Below-Path. This check measures angle above horizontal that 190µA/ 150Hz occurs. Measure the structure below path during the level run.

Maneuvering	Glide Slope	AFIS	Analysis
ILS-2	Normal or other configuration	ILS-2	Measure the angle that the crosspointer intersects the 190µA /150 Hz point.

Other considerations

- Altitudes lower than the established level run altitude may be required to make this measurement.
- The structure-below-path point does not have to occur within the service volume of the facility to be a valid check, provided the AGC and flag alarm current indications are within appropriate tolerances.
- If unable to find the 190 µA/ 150 Hz point in any facility configuration conduct a clearance below path check starting at the edge of the service volume. Apply the appropriate tolerance.
- During monitor dephase checks, the structure below-path angles, as compared to the normal SBP, indicate performance of the below path sensitivity of the glide slope.
- Maintenance may use this information for system optimization.

k. Clearances. Glide slope clearances give the pilot an indication if he is above or below the commissioned glide angle. In flight inspection, the primary concern is a full fly up indication on the pilot instruments.

(1) Clearance Below the Path. Perform this check to assure that positive fly-up indications exist between the bottom of the glidepath sector and obstructions.

Maneuvering	Glide Slope	AFIS	Analysis
Below path approach from GSI to threshold on the localizer course.	Normal or other configurations	ILS-2	Check that the required amount of fly-up signal exists

Other considerations. Check clearance below path from the FAF/ GSI to the following points:

- For all glide slopes with runway centerline localizers, check centerline clearances to threshold.
- CAT I not used below 200 ft Decision Altitude (DA) -- ILS point "C" for an unrestricted glide slope, to threshold for Part 139 airports or the point at which the glide slope is restricted. When checking clearances to threshold, document the results as satisfactory or unsatisfactory between Points “C” and “T” on the flight inspection report.
- CAT I special use as Cat II and all CAT II/III –to Runway threshold.
- For glide slopes associated with offset localizers or LDA(s), check to point “C”.
- For the 5° and 8° Endfire checks, check only to Point “B”.

(2) Clearances Above the Path. Check clearances above path to ensure that positive fly-down indication is received prior to intercepting the first false path.

Maneuvering	Glide Slope	AFIS	Analysis
ILS-2	Normal or other configurations	ILS-2	Check that 150µA fly-down occurs prior to the first false path.

l. Mean Width. Perform this check per maintenance request and for verification of questionable path width and/or symmetry results. It determines the mean width of a glidepath between ILS Points "A" and "B". This check is also be used to determine the mean symmetry of the glidepath.

Establish the level run width prior to the mean width check.

Maneuvering	Glide Slope	AFIS	Analysis
ILS-3 on course/ on path	Normal	ILS-3 "ON"	Measure the on path angle
ILS-3 on course/ 75µA above path	Normal	ILS-3 "ABV"	Measure the 75µA above path angle
ILS-3 on course/ 75µA below path	Normal	ILS-3 "BLW"	Measure the 75µA below path angle

Other considerations

- Mean width = Above path angle – Below path angle
- Mean symmetry = $\frac{\text{Above path angle- On path angle}}{\text{Mean width}}$

m. Tilt. This check verifies that the glidepath angle and clearances are within the authorized tolerance at the extremities of the localizer course sector.

Maneuvering	Glide Slope	AFIS	Analysis
ILS-2 left of course at the localizer 150 µA point	Normal	ILS-2	Verify that the angle, modulation, and clearances above path are in tolerance
ILS-2 right of course at the localizer 150 µA point	Normal	ILS-2	Verify that the angle, modulation, and clearances above path are in tolerance
Below path approach from the GSI distance to point "B" left of course at the localizer 150 µA point	Normal	ILS-2	Verify that the clearance below path meets tolerances
Below path approach from the GSI distance to point "B" right of course at the localizer 150 µA point	Normal	ILS-2	Verify that the clearance below path meets tolerances

Other considerations

- Fly the ILS-2 at the established level run altitude.
- Apply the actual angle correction factor to the level run angles.
- Tilt check is only required on 1 transmitter.

n. Structure and Zone 3 Angle Alignment. These checks measure structure deviations and Zone 3 angle alignment. The angle alignment (or deviation of the mean angle from Point B to Point T) is affected by siting, phasing, and antenna offset factors that may not affect the measured Zone 2 angle.

Maneuvering	Glide Slope	AFIS	Analysis
ILS-3 on the glidepath and localizer course	Normal	ILS-3	Measure the worst (with respect to tolerances) µA deviations: **Zone 1**- from Graphical average **Zone 2** - from Actual angle **Zone 3** - from Graphical average In addition for CAT II or III evaluate angle alignment: **PT B** – Worst average µA deviation of point B-C BFSL angle from the commissioned angle. **PT C** – Worst average µA deviation of point C-Threshold BFSL angle from the commissioned angle. **PT T** – µA deviation at point T from the commissioned angle.

Other considerations

- During site, commissioning, reconfiguration, categorization, antenna, and/or frequency change, evaluate the structure from 10 miles from the glide slope antenna or ESV (whichever is greater) through all zones.
- During all other inspections (i.e., periodic, periodic with monitors, etc.) this evaluation can be accomplished from the GSI.
- Position the aircraft within 22.5 µA of the "on-path" throughout 95% of Zone 2 unless the path characteristically exhibits structure of greater magnitude.
- See the graphs below for analysis of rate of change/reversal and structure.

RATE OF CHANGE/REVERSAL IN THE SLOPE OF THE GLIDEPATH

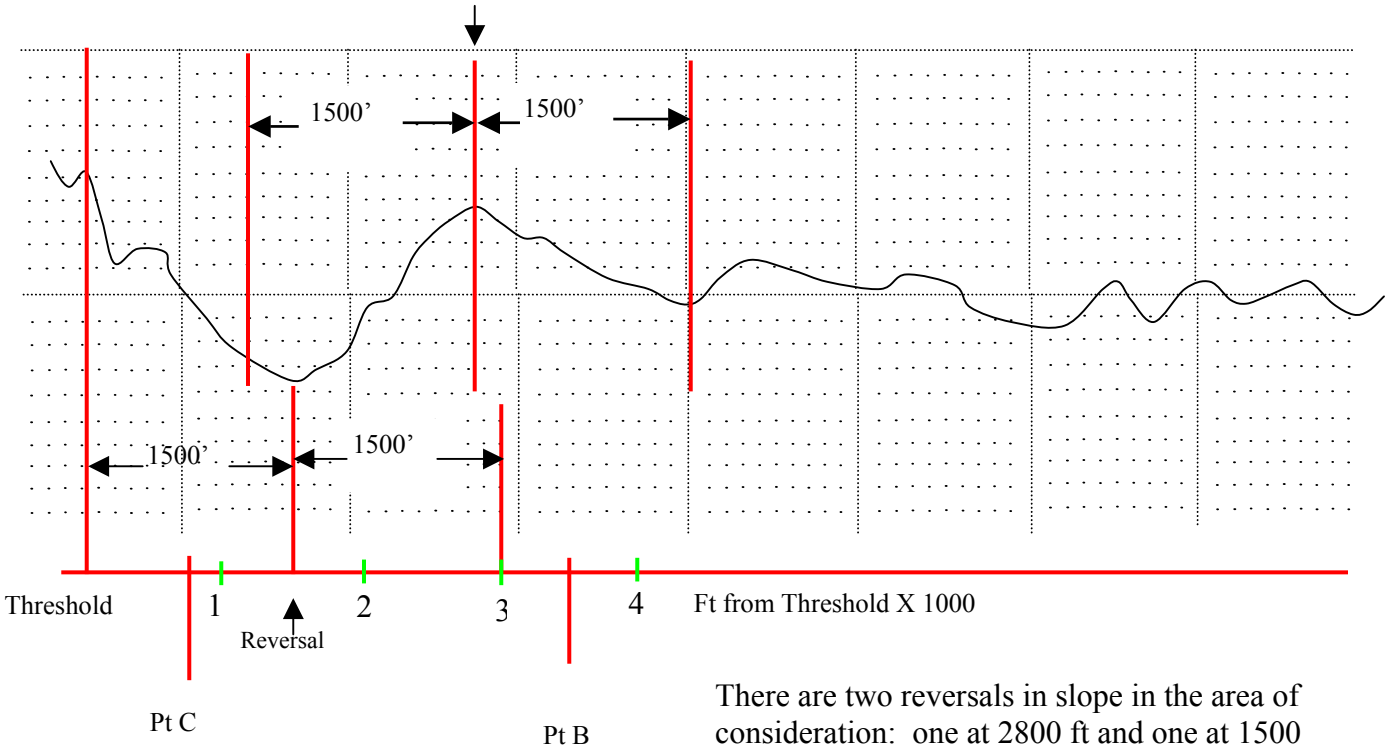

There are two reversals in slope in the area of consideration: one at 2800 ft and one at 1500 ft from the threshold. Each reversal meets the requirement that the slope or trend on at least one side of the break extends for at least 1500 ft.

APPLICATION OF STRUCTURE TOLERANCE—CAT II/ III

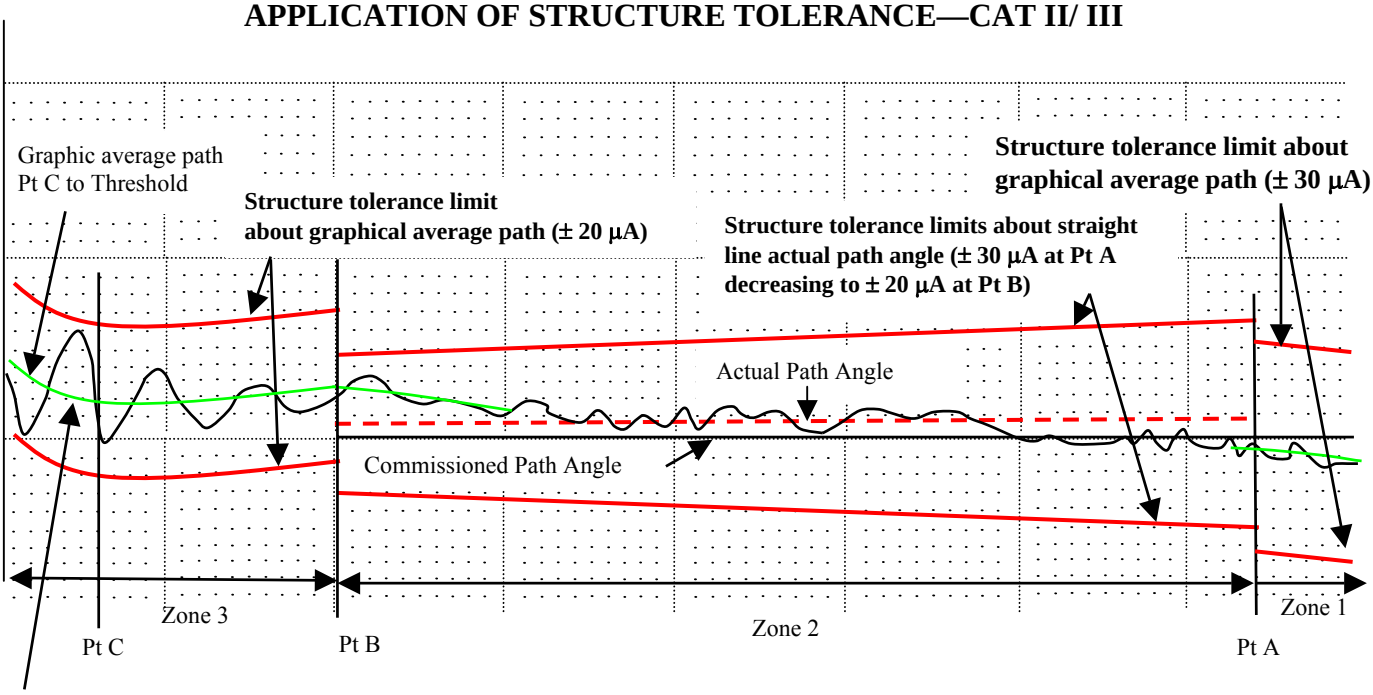

o. Transverse Structure--Endfire Glide Slope. This is a measurement of the horizontal structure of the glidepath and is directly related to on-path structure, tilt, and clearance.

Maneuvering	Glide Slope	AFIS	Analysis (expected results)
Fly an arc of at least 12° each side of localizer centerline at the *FAF distance and FAF altitude corrected to true altitude. Reference the arc laterally to localizer centerline abeam the glide slope antenna. *If the FAF is less than 5.0 miles from the glide slope, change the arc distance to at least 5 miles.	Primary TX normal/ Clearance TX normal Or Primary TX normal/ Clearance TX off (commissioning type check)	Record both localizer and glide slope crosspointer: The glide slope should be calibrated to 150µA to ensure proper trace definition. The localizer should be calibrated to enable the technician to identify the 150µA points.	Within the localizer course sector, **The change of the glide slope signal should not exceed *64µA of 150 Hz or *48µA of 90 Hz from the crosspointer from the edge of the localizer course sector to 8° from the localizer on course.** Signals should not exist that are greater than 48µA in the 90 Hz direction from the glide slope crosspointer value found on the localizer on-course. *This analysis applies to a 3.0° commissioned glide slope angle.

Transverse Structure Microamp Limits

+10%/ -7.5% ANGLE ALARM/TRANSVERSE STRUCTURE MICROAMP VALUE

Commissioned Angle	Low Angle (°/µ A)	High Angle (°/µ A)
2.5°	2.32°/ 38 µA (90 Hz)	2.75°/ 53 µA (150 Hz)
3.0°	2.78°/ 48 µA (90 Hz)	3.30°/ 64 µA (150 Hz)
3.5°	3.24°/ 55 µA (90 Hz)	3.85°/ 75 µA (150 Hz)

Other considerations

- If the FAF is less than 5.0 miles from the glide slope, change the arc distance to at least 5 miles. (*Since aircraft distance and altitude affects the received glide path, it is critical that these parameters do not vary during the arc.)*
- Results exceeding the expected values will require engineering analysis prior to final resolution.
- Engineering may use the results of these checks to adjust antenna pedestal locations and signal levels.
- Multiple runs may be required to optimize the antenna arrays.
- On any inspection after commissioning, where transverse structure is checked, compare the course and clearance normal results with those from the last results on file.
- Notify maintenance of any significant changes. Perform a tilt check on the affected side(s) if the glide slope µA deflection at the localizer 150 µA point exceeds angle tolerances.
- Using FAA Form 8240-19, plot all “as left” transverse structure configurations, to include those accomplished at maintenance request.

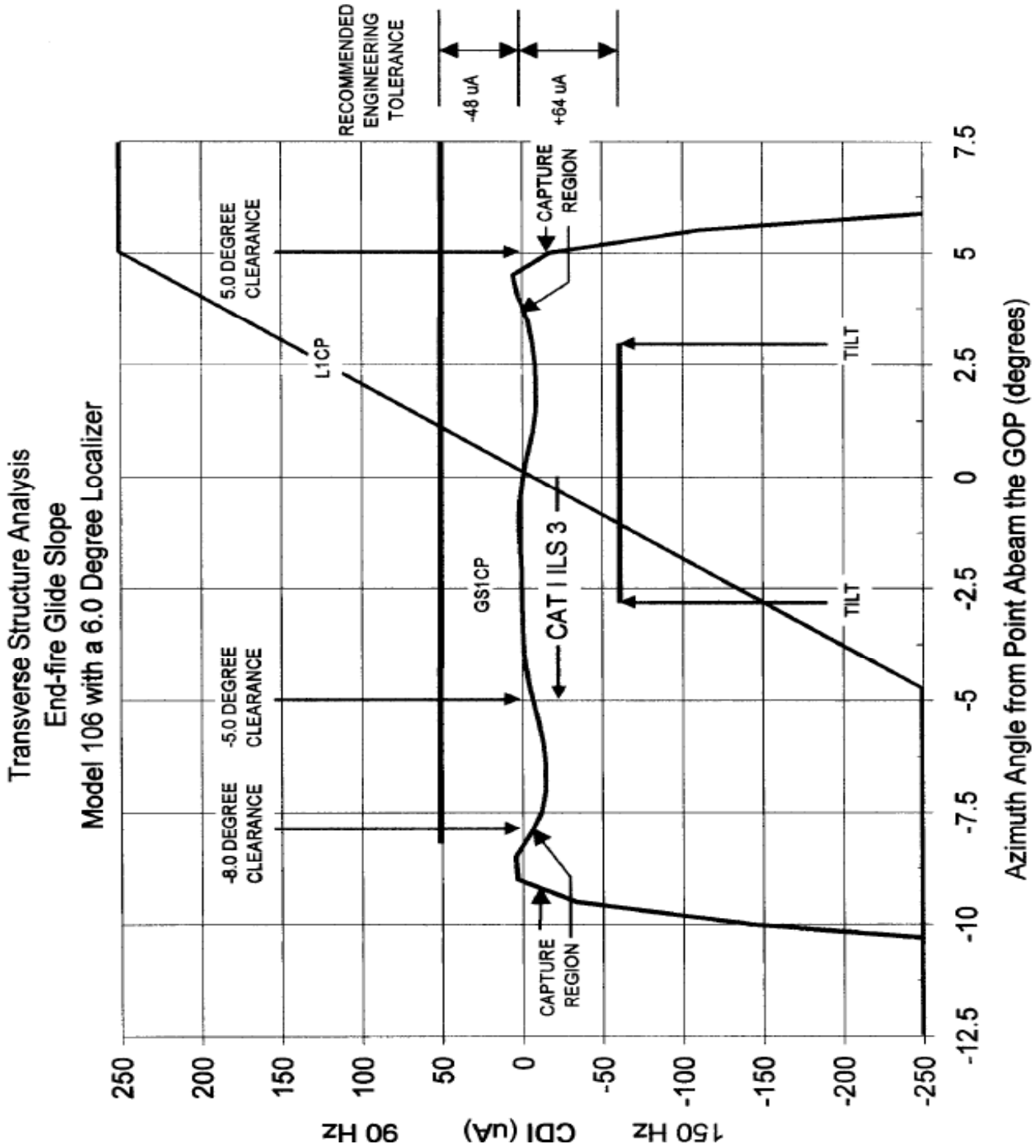
Transverse Structure Analysis
End-fire Glide Slope
Model 106 with a 6.0 Degree Localizer
RECOMMENDED ENGINEERING TOLERANCE
-48 uA
+64 uA
5.0 DEGREE CLEARANCE
-5.0 DEGREE CLEARANCE
-8.0 DEGREE CLEARANCE
L1CP
GS1CP
CAT I ILS 3
CAPTURE REGION
CAPTURE REGION
TILT
TILT
250
200
150
100
50
0
-50
-100
-150
-200
-250
90 Hz
CDI (uA)
150 Hz
-12.5
-10
-7.5
-5
-2.5
0
2.5
5
7.5
Azimuth Angle from Point Abeam the GOP (degrees)

p. Monitors. The purpose of these checks is to measure glidepath parameters when the facility is set at the monitor reference.

Maneuvering	Glide slope	AFIS	Analysis
ILS-2	Monitor reference (Wide, Narrow, etc)	ILS-2	Measure width, angle, and structure below path in each required monitor reference condition

Other considerations

- Check the facility in normal prior to conducting the monitor check.
- After any monitor inspection, return the facility to normal, check angle, width, symmetry, and structure below the path, and report results to maintenance.

q. RF Power Monitor Reference. Conduct this check to determine that the glide slope meets specified tolerances throughout its service volume while operating at reduced power.

Maneuvering	Glide Slope	AFIS	Analysis
While maintaining an altitude equal to 0.45 times the commissioned angle and on the localizer course, fly inbound from 10 nm from the facility through the glidepath sector until clearances above the path is received.	**Reduced power (both primary and clearance transmitters for capture effect and endfire glide slopes).**	ILS-2	Signal strength Fly-up/ Fly-down Flag alarm
While maintaining an altitude equal to 0.45 times the commissioned angle and 8° right of localizer centerline abeam the glideslope origination point, fly inbound from 10 nm from the facility through the glidepath sector until clearance above the path is received.	Same as above	ILS-2	Same as above
While maintaining an altitude equal to 0.45 times the commissioned angle and 8° left of localizer centerline abeam the glideslope origination point, fly inbound from 10 nm from the facility through the glidepath sector until clearance above the path is received.	Same as above	ILS-2	Same as above

Other considerations.

- In situations where the GSI intersects the glidepath at a distance that provides less than 150µA fly-up signal, descend to an altitude, which will provide at least 150 µA fly-up while providing adequate obstacle clearance at 10 miles.

- To validate an ESV, see Chapter 22.
- The endfire glide slope antenna array is orientated toward the runway. The normal fly-up/ fly-down signal ends at approximately 5°on the antenna side of the runway; therefore, you will have only 150 Hz clearance signal at 8°on the antenna side of the runway.

r. Glide Slope Best-Fit Straight Line (BFSL) is used to determine the CAT II/ III glide slope angle, RDH, ARDH, and GPI. (Reference FAA Order 8240.47)

NOTE: Glide Slope Transmitter Equality of Modulation and Phasing can affect the results. A skew can affect the announced angle. Keep the path width angle within commissioning tolerances.

(1) Conduct at least **3**, glide slope approaches with similar trends in the AFIS Zone 2 corrected error traces. After each approach, the results are reviewed on the ILS BEST FIT STRAIGHT LINE – LATEST RUN RESULTS; Pg 3 of 4. If the approach is acceptable, enter the run on the next available column on the ILS BEST FIT STRAIGHT LINE – SUMMARY RESULTS, Pg 4 of 4.

(2) If skewing is present in Zone 2 of the corrected error trace, it indicates optimum AFIS aiming point elevation (glide slope height) has not been achieved.

(3) Using the information from Pg 4 of the ILS BFSL – SUMMARY RESULTS, algebraically add the value of "Z2BF DHT" "AVE" to the "GS HGT" "INITIAL" value to obtain the new value of the glide slope height. Use this new value on the AFIS Facility Data Page (round to the nearest foot). Repeat the process (1) thru (3) until the Z2BF DHT average value is < 3 ft.

(4) When Step c is satisfied after **3** consecutive runs, the final computed BFSL angle (Z2BF PA Average) is within .05° of the desired commissioned angle, and there is no skew of the Zone 2 corrected error trace, then the GS angle, origination point, and the reference elevation have been optimized.

(5) Using the latest information from Step (4), report the following from "ILS BFSL – SUMMARY RESULTS" page 4 of ILS-3 Mode to the Procedures Specialist and enter in the Remarks of the FI Report:

RDH – The value listed as "TCH/ RDH" in the "INITIAL" column

ARDH – is to be calculated by algebraically adding 'Z3 T HGT' AVE result to the final "TCH/RDH' elevation under INITIAL column. Report the result as the ARDH.

GS HGT – The value listed as "GS HGT" in the "INITIAL" column

GPI – The value listed as the "GPI RNG" in the "INITIAL" column

GS Transmitter Equality of Modulation and Phasing can affect the results.
Keep the path width angle within commissioning tolerances.

Step	Maneuvering	Glide Slope	AFIS	Analysis
1	ILS-3	Normal	ILS-3	Review the ILS BFSL – LATEST RUN RESULTS, Pg 3 of 4. If the approach is acceptable, enter the run on the next available column on the ILS BSFL – SUMMARY RESULTS, Pg 4 of 4.
2	ILS-3	Normal	ILS-3	Same as Step 1
3	ILS-3	Normal	ILS-3	Same as Step 2
4				If the Z2BF DHT of the ILS BFSL – SUMMARY RESULTS on Pg 4 average value is > 3 feet. Algebraically add the value of "Z2BF DHT" "AVE" to the "GS HGT" "INITIAL" value to obtain the new value of the glide slope height rounded to the nearest foot)
5			Change the AFIS Facility Data Page "GS HGT" to the new value, save and print page.	
6				**Repeat** Steps 1-4 until the Z2BF DHT average value is < 3 feet.
7				The GS angle, origination point, and reference elevation is optimized if, after 3 consecutive runs, the final computed BFSL angle (Z2BF PA Average) is within .05° of the desired commissioned angle and there is no skew.

Step	Maneuvering	Glide Slope	AFIS	Analysis
8				Report the following from "ILS BFSL – SUMMARY RESULTS" page 4 of ILS-3 Mode to the Procedures Specialist and enter in the Remarks of the FI Report: **RDH** – The value listed as "TCH/ RDH" in the "INITIAL" column **ARDH** – Z3 T HGT in AVE column + (algebraic) final TCH/RDH value in INITIAL column **GS HGT** – The value listed as "GS HGT" in the "INITIAL" column **GPI** – The value listed as the "GPI RNG" in the "INITIAL" column

Other considerations

- A skew can affect the announced angle. If skewing is present in Zone 2 of the corrected error trace, it indicates optimum AFIS aiming point elevation (glide slope height) has not been achieved.
- CAT II/ III – The RDH must be commissioned at 50 – 60 ft. Flight Standards may provide a waiver up to 63 ft at the request from the region.
- If BFSL is applied to a CAT I facility, the flight check derived RDH replaces procedural TCH.
- TERPS Instrument Procedures limits the CAT I procedural TCH to a maximum of 60 ft.
- If the criteria cannot be met, consult Engineering/ Installation personnel to determine if the facility will meet its "Operational Requirements" before attempting to commission the facility.

s. Tilt Checks are performed during commissioning inspections or at the request of maintenance. The result of these checks determines the effects of terrain either side of the runway, but within the service volume of the glide slope. Normal periodic tolerances are applied.

Maneuvering	Glide Slope	AFIS	Analysis
ILS-2 left of course at the localizer 150 μA point	Normal	ILS-2	Verify that the angle, modulation, and clearances above path are in tolerance
ILS-2 right of course at the localizer 150 μA point	Normal	ILS-2	Verify that the angle, modulation, and clearances above path are in tolerance
Below path approach from the GSI distance to Point "B" left of course at the localizer 150 μA point	Normal	ILS-2	Verify that the clearance below path meets tolerances
Below path approach from the GSI distance to Point "B" right of course at the localizer 150 μA point	Normal	ILS-2	Verify that the clearance below path meets tolerances

Other Considerations

- Glide slopes associated with offset localizers or LDA(s), check to Point "C".
- CAT I not used below 200 ft Decision Height (DH). System is satisfactory if clearances meet the tolerances to Point "C", or the point where the glide slope is restricted. On the flight inspection report, document whether clearances were satisfactory or unsatisfactory between Point "C" and "T".

t. Special checks

(1) Antenna change (same type). Flight inspection of the glide slope after a same type antenna change or feed-line cable replacement should include as a minimum, the periodic with monitor checks. Ground maintenance and the flight crew will make the final determination of the checks to be performed. Discussion should take place concerning the effect on the radiated signal, the ability to trace current references, and the need establish new references. Consider the following checks:

(a) Clearance below path in the condition with the lowest SBP

(b) Phase Verification (capture effect)

(c) Reduced RF power

(d) Standby transmitter monitor references

(e) Evaluation of structure from the service volume

SECTION 4. 75 Mhz MARKER BEACON

15.40 INTRODUCTION

a. General. A marker beacon is a VHF radio transmitter, which radiates an elliptically shaped (fan) vertical radiation pattern on an assigned frequency of 75MHz. Marker beacons provide an aural and visual indication of station passage in association with facilities providing course guidance.

b. Characteristics. Marker beacons transmit an elliptical pattern with dimensions of approximately 2,400 ft in width and 4,200 ft in length at 1,000 ft above the antenna.

c. Classification. 75MHz marker beacons are separated into two categories: ILS markers and fan markers. Figure 15-3 shows the basic radiation pattern for either type marker looking down on the antenna.

Figure 15-3
RADIATION PATTERN-PLAN VIEW

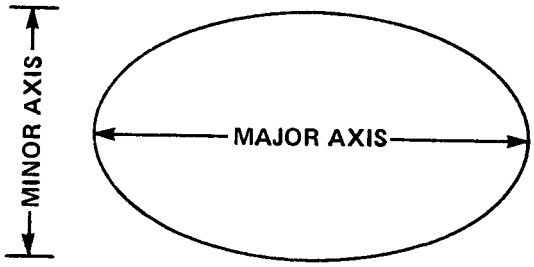

(1) ILS Markers. These markers are located on the approximate instrument runway centerline extended in accordance with installation criteria specified in other documents. They are installed to indicate the position of an aircraft along the instrument approach course.

(a) Outer Marker. Normally indicates a position at which an aircraft at the appropriate altitude on the localizer course will intercept the ILS glide path. Modulated at 400Hz, keyed at continuous dashes (— — —) at a rate of two per second, and illuminates a blue lamp.

(b) Middle Marker. Indicates a position approximately 3,500 ft from the landing threshold. This is also the position where an aircraft on the glide path will be at an altitude of approximately 200 ft above the touchdown zone elevation. Modulated at 1300Hz, keyed at alternating dots (• — • —) and dashes at a rate of 95 combinations per minute, and illuminates the amber lamp.

(c) Inner Marker. Indicates a point at which an aircraft is at a designated decision height (DH) on the glide path between the MM and landing threshold. Modulated at 3000Hz, keyed at continuous dots (••••) at a rate of six per second, and illuminates the white lamp.

(2) Fan Markers. These markers are generally associated with nonprecision approach procedures; however, they may be associated with an ILS to serve as a localizer step-down fix or MAP for circling approaches to secondary airports. Fan markers are modulated at 3000Hz and illuminate the white lamp. Fan markers keying code is different for Back Course Fan Markers and other installations

(a) Back Course Fan Marker. Is keyed at two dot pairs (• • • •) at a rate of 95 pairs per minute; older equipment is keyed at 75 pairs per minute.

(b) Other Installations. Morse code letter R (• — •). Where more than one approach marker is located in the same area, different keying is necessary to avoid confusion. The Morse code letter K (— • —), P (• — — •), X (— • • —), and Z (— — • •) will be used in the priority listed.

15.41 FLIGHT INSPECTION PROCEDURES

a. Identification and Modulation Tone. Evaluate the facility identification for correct tone, keying code, and interference throughout the area of required coverage.

(1) Maneuvering. Maneuver the aircraft on the procedural course and on the glide path for an ILS or the published minimum altitude for non-precision approaches.

(2) AFIS/ Equipment Setup. The marker beacon sensitivity must be in the low position. Turn marker volume on to a comfortable level on the audio box.

(3) Analysis. Evaluate the keying code while flying in the radiation pattern, and check the audio modulation tone is correct by noting that the proper light comes on for the marker being inspected.

(4) Other Considerations. Keying rate is checked by facility maintenance.

b. Width and Coverage. Width is measured to assure adequate time in the radiated pattern to activate audio and visual cues in the cockpit of the aircraft executing an approach. Coverage is conducted to ensure that the facility provides an elliptical radiation pattern that supports operational requirements without interfering with other facilities or instrument flight procedures.

(1) Minor Axis is defined as the shortest diameter of the ellipse. The actual width of the marker is measured on the minor axis, and is measured on the procedural course. This check is normally made during a "Flight Inspection Low Approach". (See note)

Figure 15-4
Marker Beacon Width

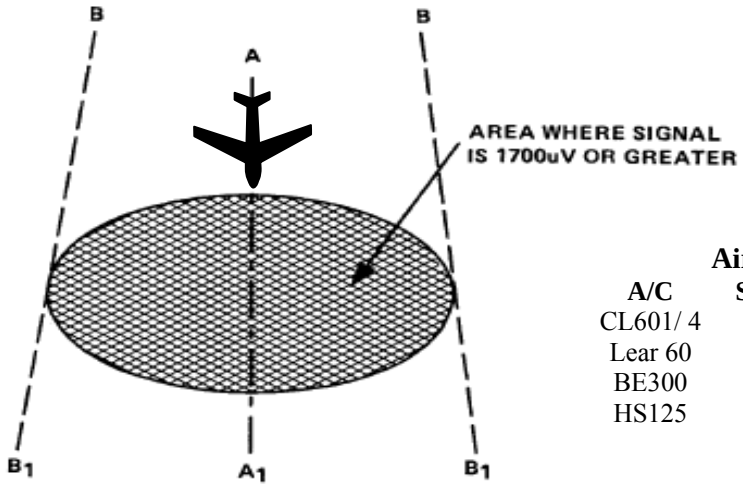

Aircraft Configuration

A/C	Speed KIAS	Flaps	Gear
CL601/ 4	140 – 180	20	DN
Lear 60	160 – 200	20	DN
BE300	140 – 160	Approach	DN
HS125	Vref+25	15	DN

NOTE:

A-A_1-Electronic On-Course (LOCALIZER, NDB, VOR, VORTAC)

B-B_1-LOCALIZER/SDF/LDA 75µA 90 or 150Hz or Omni-Directional 5° either side of the Electronic Procedural Bearing / Radial

(a) Maneuvering. On precision approach, intercept the glide slope at an altitude to allow the aircraft to be established on path and on course when flying through the marker signal. For non-precision, fly through the marker beacon signal on the electronic course providing approach guidance in the direction of intended use at the minimum altitude of the approaches. (See Figure 15-4)

(b) AFIS/ Equipment Setup. The marker beacon sensitivity must be in the low position. Toggle “Marker” and “GND SPD” to “ON” on the Plot Control. Turn on/up the volume for the marker on the audio control panel.

(c) Analysis. Marker width is determined based on duration the signal strength exceeds 1700µV.Outer and fan markers are allowed "holes" in the area of coverage provided that it is less then 300 feet in duration, a hole is defined as a momentary reduction in signal strength below 1700µV within the coverage area. The existence of a hole must be included in the total width of the marker. (See Figure 15-7)

> **NOTE:** Markers may be manually measured using the ground speed method. Determine the average ground speed while over the marker using the AFIS trace. Next determine the seconds between the first positive and final negative crossing of the 1700µV reference level. Then multiply the average speed by the seconds, and divide by 0.592. (See Figure 15-9)

(d) Other Considerations. If a marker beacon supports both precision and non-precision procedures and the difference between the respective intercept altitudes exceeds 100 feet, conduct the initial minor axis check at both altitudes; thereafter, either altitude may be used. Outer markers holes are allowed if the hole is 300 feet or less.

(2) Major Axis is defined as the longest diameter of the ellipse. Conduct this check to verify that the marker beacon provides adequate coverage by measuring the width of the minor axis at the extremities of a predefined off-course sector. Measure each side when established on glide path. (See Note)

Figure 15-5
Marker Beacon Coverage

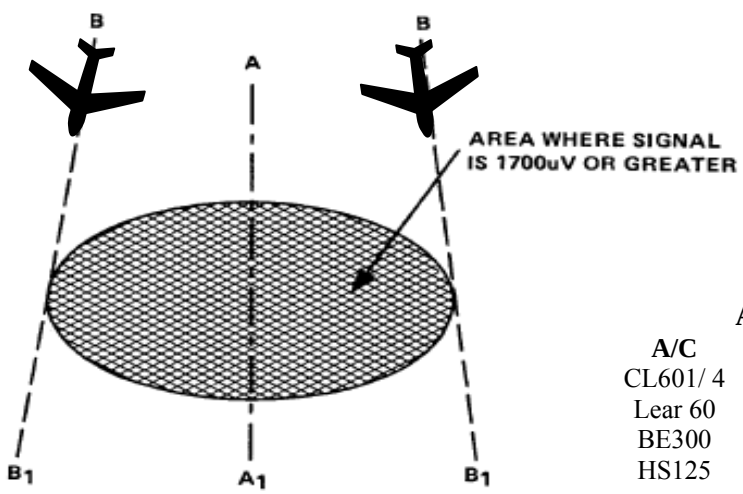

Aircraft Configuration

A/C	Speed KIAS	Flaps	Gear
CL601/ 4	140 – 180	20	UP
Lear 60	160 – 200	20	UP
BE300	140 – 160	Approach	UP
HS125	Vref+25	15	UP

NOTE:

A-A_1-Electronic On-Course (LOCALIZER, NDB, VOR, VORTAC)

B-B_1-LOCALIZER/SDF/LDA 75µA 90 or 150Hz or Omni-Directional 5° either side of the Electronic Procedural Bearing / Radial

(a) Maneuver. Check the major axis at the same altitude as the minor axis. Unidirectional facilities (e.g. LOC/ LDA/ SDF) must be provided lateral marker coverage 75µA each side of the on-course signal. Omni directional facilities (e.g. VOR, NDB, etc.) must be provided lateral coverage 5° each side of the procedural on-course signal.

(b) AFIS/ Equipment Setup. Marker beacon sensitivity must be in the low position. Toggle "Marker" and "GND SPD" to "ON" on the Plot Control. Turn on/ up the volume for the marker on the audio box.

(c) Analysis. Major axis coverage is determined by the type of facility it is associated with and will meet tolerances IAW Order 8200.1.

(d) Other Considerations. There is no requirement to check major axis coverage for inner markers.

c. Proximity Check. This inspection supplements the basic coverage check to assure operational compatibility of a marker beacon sited in close proximity to another marker beacon. There are two possible proximity checks to be performed, signal intermix and beacon/ procedure overlap.

(1) Marker Beacon Signal Intermix. This check is conducted to determine if there is unacceptable signal derogation caused by the simultaneous operation of two or more marker beacons in close proximity

Figure 15-6
Marker Beacon/ Procedure Intermix

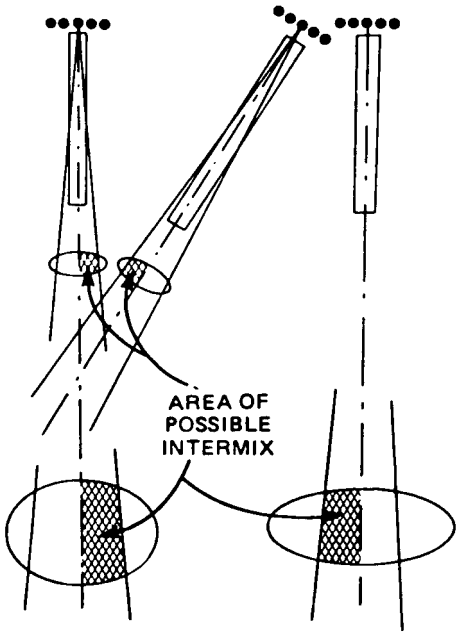

(a) Maneuver. Check the major axis at the lowest procedural altitude on the side closest to the adjacent marker.

(b) AFIS/ Equipment Setup. Marker beacon sensitivity must be in the low position. Toggle "Marker" and "GND SPD" to "ON" on the Plot Control. Turn on/ up the volume for the marker on the audio box. Perform periodic checklist items with all proposed marker beacons operating.

(c) Analysis. Ensure required parameters are in-tolerance and there are no adverse audio interference or vague/ distorted fix indication.

(d) Other Considerations. Conduct the proximity check on the side of the adjacent marker.

(2) Marker Beacon/Procedure Overlap. Conduct this check to ensure there is no false marker beacon indication present along an instrument approach course, which would authorize a premature descent before the point at which the actual fix position/marker beacon occurs. This situation could exist if the "intruding" marker beacon signal had the same modulation, even though the identifications may differ. Conduct this check only if this suspected condition exists.

Figure 15-7
Marker Beacon Overlap

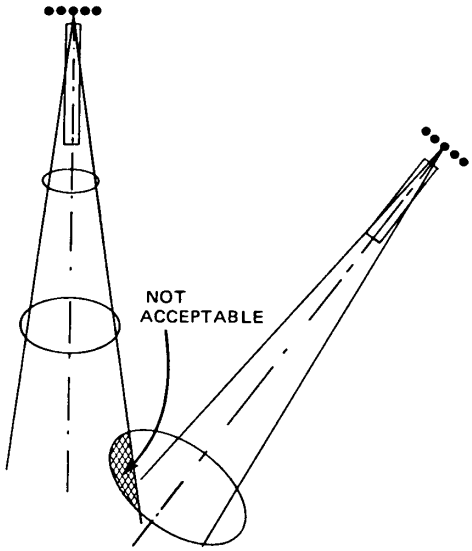

(a) Maneuver. Position the aircraft at either 150µA point for LOC/ LDA and SDF(s), or 5° for omni directional facilities nearest the potentially misleading marker beacon at the minimum procedural altitude.

(b) AFIS/ Equipment Setup. The marker beacon sensitivity must be in the low position. Toggle "Marker" to "ON" on the Plot Control. Turn on/ up the volume for the marker on the audio box.

(c) Analysis. Suspend the procedure if the signal intrusion into the approach area is at or above 1700µV.

(d) Other Considerations. If the signal cannot be reduced, the procedure must be denied or the misleading marker removed from service.

d. Holding Fixes. Marker beacon transmitters can be used as a holding fix at altitudes greater than Paragraph b above.

(1) Maneuvering. Check the major and minor axis at the highest proposed altitude.

(2) AFIS/ Equipment Setup. The marker beacon sensitivity must be in the low position. Toggle "Marker" and "GND SPD" to "ON" on the Plot Control. Turn on/ up the volume for the marker on the audio box.

(3) Analysis. The marker must meet the same tolerances at the highest proposed altitude as at the lowest proposed altitude.

(4) Other Considerations. If performance is unsatisfactory and cannot be corrected by facility adjustment, the operational altitudes must be revised or procedural use denied.

e. Standby Equipment. Complete the full commissioning checklist on both transmitters, if equipped.

f. Standby Power. If standby power is installed, have the facility power source switched to standby and check equipment on the minor axis.

NOTE: If facility is operating on floating battery, this check is not required.

15.42 TABLES AND SUPPLEMENTAL INFORMATION

Figure 15-8
75 MHz Marker Width Measurement

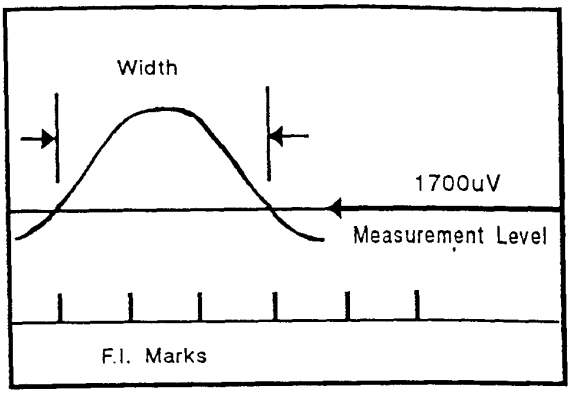

Figure 15-9
75 MHz Marker Width Measurement
(A to B Equals Width, Includes the hole)

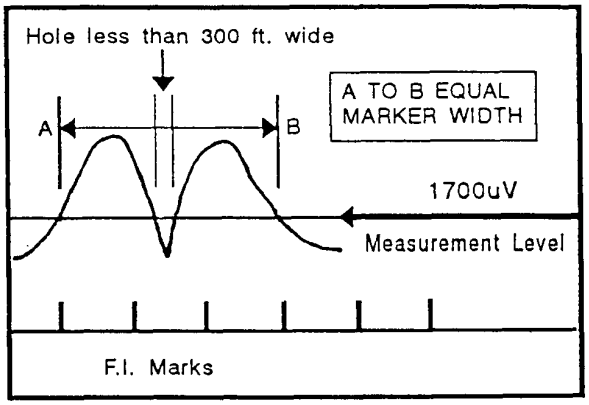

Figure 15-10
Examples of Patterns not meeting Width Criteria
(A&B are not additive)

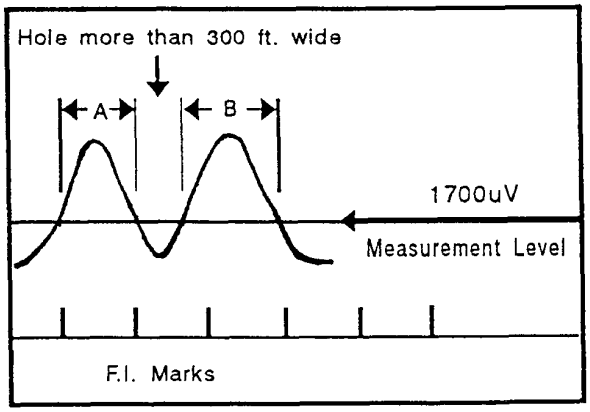

Figure 15-11

75 MHz Marker Beacon Formulas

Marker Width

$$W_{ft} = \frac{(TAS)(T_{av})}{0{,}592} \quad \text{or}$$

$$W_{ft} = \frac{(G_s)(T)}{0.592} \quad \text{or}$$

$$W_{nm} = \frac{(TAS)(T_{av})}{3600}$$

Where:

G_s = Ground Speed (knots)
W_{ft} = Width (ft)
W_{nm} = Width (nm)
T = Time (sec)
TAS = True Airspeed (knots)
T_{av} = Time Average (sec)

This Page Intentionally Left Blank

CHAPTER 16. MICROWAVE LANDING SYSTEM

TABLE OF CONTENTS

Paragraphs *Title* *Pages*

SECTION 1. GENERAL

16.10 INTRODUCTION 16-1
a. General 16-1
b. Classification 16-1
c. Characteristics 16-1

16.11 FLIGHT INSPECTION PROCEDURES 16-1
a. Data Word Verification 16-1
b. Lateral Coverage 16-2
c. Reference Arc 16-3
d. Vertical Coverage 16-4
e. Approach AZ & EL 16-6
f. Azimuth Monitor 16-9
g. EL Monitor 16-10
h. Below Path Coverage Evaluation 16-10
i. Identifier 16-10
j. DME 16-11
k. Out of Coverage (OCI) 16-11
Table 16-1 Reference ARC Altitude 16-12

SECTION 2. MOBILE MICROWAVE LANDING SYSTEM

16.20 INTRODUCTION 16-13

16.21 ACTIVITIES REQUIRING A CONFIRMING FLIGHT INSPECTION 16-13

16.22 EXAMPLE BEST PRACTICE COMMISSIONING TYPE CHECKLIST 16-14

16.23 FLIGHT INSPECTION PROCEDURES 16-15
a. Coverage Arcs 16-15
b. Vertical Coverage 16-15
c. Computed Centerline Approaches 16-16
d. Monitors 16-17
e. MMLS Data Words 16-17
Table 16-2 MMLS Data Word Translator 16-17
f. ID 16-19
g. DME 16-19

TABLE OF CONTENTS

Paragraphs *Title* *Pages*

FIGURES

Figure 16-1 MLS-1 Split Site Configuration Azimuth Horizontal Coverage 16-4
Figure 16-2 Approach Elevation Coverage Vertical Coverage..... 16-5
Figure 16-3 Approach Elevation Coverage Horizontal Coverage 16-6
Figure 16-4 MLS-3 Flight Inspection Low Approach 16-8
Figure 16-5 AZ/ EL Approach 16-9
Figure 16-6 MMLS Coverage Validation and Minimum Proportional Guidance 16-20
Figure 16-7 Azimuths for Coverage Below Path (Computed Centerline Facilities)..... 16-21

TABLES

Table 16-1 Reference ARC Altitude..... 16-12
Table 16-2 MMLS Data Word Translator 16-17

CHAPTER 16. MICROWAVE LANDING SYSTEM (MLS)

SECTION 1. GENERAL

16.10 INTRODUCTION

a. General. The MLS uses three main components to develop approach guidance information. The Azimuth or AZ antenna provides lateral guidance. The Elevation or EL antenna provides vertical guidance. The third component is a DME. The MLS is capable of providing approach guidance with pilot selectable azimuth and elevation angles within the limits set by transmitted data words.

b. Classification: Standard installation of an MLS is called Split-Site. The EL antenna is offset near threshold similar to GS antenna and AZ antenna past the end of runway similar to a localizer.

c. Characteristics: Within proportional guidance, CDI deflection is proportional to aircraft deviation from the selected azimuth and selected angle. Outside the proportional guidance area, the azimuth clearance guidance provides full-scale deflection. The typical service volume provides lateral coverage to 40° each side of antenna boresight, but the standard service volume may extend laterally to 60°. The elevation guidance is proportional throughout its coverage.

NOTE: On the AFIS Flight Inspection Data page, MLS TYPE must be changed to COLLOCATED when the azimuth and elevation are located together, IAW TI 4040.55.

16.11 MAINTENANCE ACTIONS AND FLIGHT INSPECTION REQUIREMENTS.

Activities Requiring a Confirming Flight Inspection:

a. Major changes in local obstructions or buildings that may affect the signal strength, coverage, or courses.

b. Facility operating frequency changed.

c. Replacement or repositioning of an azimuth, elevation, or DME antenna.

d. Changes in the nominal electronic boresight alignment.

16.12 FLIGHT INSPECTION PROCEDURES

a. Data Word Verification. Data words contain facility siting and approach information and are used by the aircraft receiver to process AZ and EL information, identify the station, and determine cross pointer sensitivity. There are two types of data words: Basic and Auxiliary. Basic data words are used for all approaches. Auxiliary data words are used for RNAV and Computed Centerline Approaches. Some facilities may not transmit all auxiliary data words. Some of the MMLS data words are labeled differently than the AFIS received data words. Refer to Data Word Translator.

NOTE: Facility data entries that are RIGHT= "+" and LEFT= "-".

(**1**) **Maneuvering.** Maneuver the aircraft within the standard service volume.

(2) AFIS/ Equipment Setup. AFIS loaded with the correct facility data is the standard for comparison with transmitted data words. On non-AFIS flight inspection equipment, compare the received data words to the facility data sheet. After completing MLS profiles, the data words are printed on the last page of the NAV/TEST CTRL.

(3) Analysis. On commissioning inspections, data word discrepancies will be resolved with facility maintenance before placing the facility in service. Any intentionally missing data words will be documented on the data sheet.

NOTE: Due to calculation rounding and the conversion between feet/ meter, some errors may occur. Basic Data Words 1 and 3, as well as Auxiliary Data Words 1, 2, and 3 have tolerances.

(4) Other Considerations. The technician may need additional time to verify data word accuracy. Data word verification does not have to be checked after each flight inspection profile. AFIS does not capture all the data words every time. The technician may need time to watch the data word page, and wait for the missing data words to populate the fields.

b. Lateral Coverage. Performed to define the lateral coverage and distance limits of the AZ, EL, and DME (Figure 16-1).

(1) Maneuvering. This will be a MLS-1 starting 5° outside the service volume limit, at maximum usable distance (usually 20 nm from the threshold), and maintain an altitude equal to the minimum glide path (MGP). The altitude may be obtained by using Table 16-1,or by using OAT formula including earth curvature. Add the altitude of the reference arc to the remarks section data sheet. Inspect the MLS coverage throughout the facility's service volume. There is no need to check the lower, 0.9°, or upper, 20,000 ft, limit of the service volume, unless procedurally or operationally required. Program and couple the autopilot to AFIS for evaluation.

(2) AFIS/ Equipment Setup. Program the AFIS for arc direction, front course, and arc distance. Evaluate AZ, EL and DME guidance throughout the service volume. The default (auto selected) MLS Receiver is set according to Orbit Direction: Receiver1 (AZ1 and EL1) for CCW, Receiver 2 (AZ2 and EL2) for CW. This inspection is performed with the facility operating at the lowest computed power required to establish adequate signal coverage for the intended service volume.

(3) Analysis. Evaluate AZ, EL, and DME guidance throughout the service volume. Minimum printer/ plotter traces are AZ and EL, CMN, Deviation, and Range Error. Evaluate the proportional guidance throughout the service volume. Azimuth and elevation deviations for fluctuations greater than 0.5° that exceed 2° of arc, and all MLS receiver unlocks must be validated by radial flight as outlined in vertical coverage.

NOTE: There must be no less than 10° proportional guidance either side of procedural on course.

(4) Other Considerations. The equipment must be in RF Power. The Operational Service volume Arc should be flown at a distance of 14nm if operationally needed. AFIS printout will show PASS AZ and PASS EL. Disregard AFIS PASS/ FAIL indications in lieu of manual trace analysis. Maximum PFE, PFN and CMN deviations will also be listed.

c. Reference Arc. The reference arc is used to check azimuth and elevation signal coverage throughout the service volume at the lower edge of elevation deflection sensitivity.

(1) Maneuvering. The arc should be established between 5 and 10 nm from the ARD at an altitude equal the MGP X 0.75 at the distance flown. Start the arc 5° outside the facility's service volume. (See Figure 16-1) The approximate (including earth curvature) arc altitudes above site elevation are computed by using Figure 16-1. Pilots may select the angle flown (ex. 3.00°x0.75=2.25°, select 2.25° in the MLS receiver). Maintaining a centered elevation crosspointer at the correct distance will give a more precise altitude and is the preferred method of flying the arcs.

(2) AFIS/ Equipment Setup. Program the AFIS for arc direction, front course, and arc distances, see TI 4040.55 for further guidance.

> **NOTE:** The default (auto selected) MLS Receiver is set according to Orbit Direction: Receiver 1 (AZ1 and EL1) for CCW, Receiver 2 (AZ2 and EL2) for CW. When performing the MLS-1 inspection, the aircraft has to be inside the EL proportional section.

(3) Analysis. While traversing the service volume, record the azimuth and elevation deviation. Deviations greater than 0.5° that exceed 2° of arc and all MLS receiver unlocks, must be validated by radial flight using the procedures outlined in Vertical Coverage.

> **NOTE**: Results can be found on PG 1 of the NAV/TEST CTRL DATA page. Evaluate AZ, EL and DME guidance throughout the service volume. Minimum printer/ plotter traces are AZ and EL Deviation and Error traces, Range Error, and FI Marker.

(4) Other Considerations. After commissioning, the Mission Specialist will forward the distance and altitude of the Reference Arc to the FICO TSS to be documented on the facility data sheet. This must be the reference for periodic evaluations.

Figure 16-1
MLS-1 Split Site Configuration
AZIMUTH HORIZONTAL COVERAGE

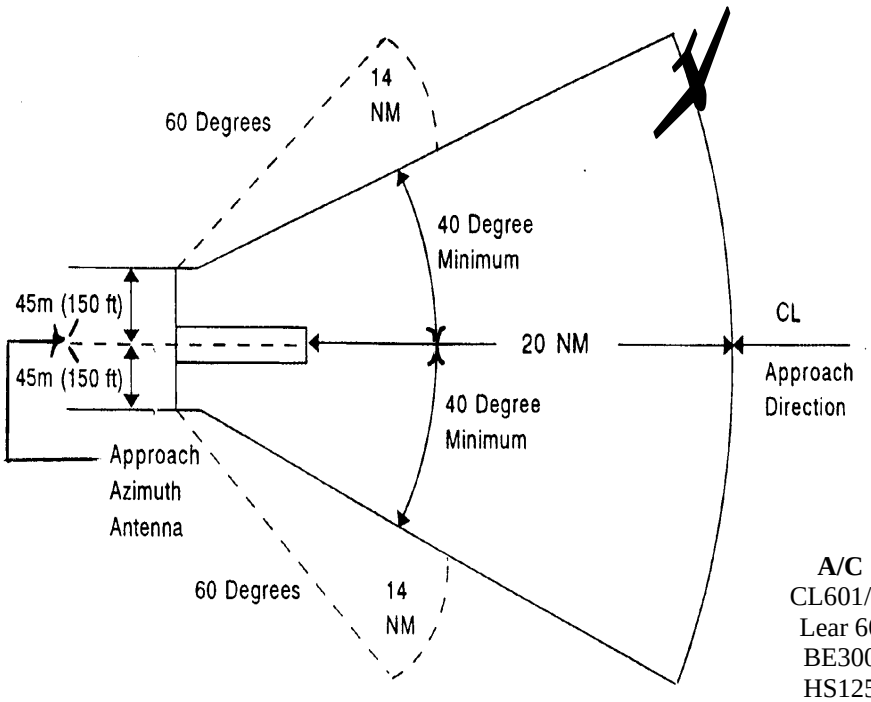

Aircraft Configuration

A/C	Speed KIAS	Flaps	Gear
CL601/ 4	170 – 250	UP	UP
Lear 60	170 – 250	UP	UP
BE300	170 – 200	UP	UP
HS125	170 – 250	UP	UP

d. Vertical Coverage. Performed to evaluate vertical coverage of the Azimuth and Elevation, and to verify out of tolerance deviations and unlocks found on the coverage and reference arcs. It is evaluated on the procedural azimuth and at ± 10° each side. Vertical coverage will consist of at least three runs.

(1) Maneuvering. Accomplish this check with a level run starting from the standard service volume at an altitude equal to MGP x 0.75 as calculated at the FAF distance. While flying inbound, determine the angle at which a consistent satisfactory signal is achieved. If this angle is higher than 0.9°, the facility must be restricted. If the angle found is greater than MGP x 0.75, the facility is unusable.

(2) AFIS/ Equipment Setup. Select MLS-2 IAW TI 4040.55.

(3) Analysis. Observe the elevation cross pointer for a smooth linear transition terminating between 15° and 20°. AFIS automatically stops when the signal is lost in the vertical plane (95% Exception Rule applies).

(4) Other Considerations. Equipment must be in RF Power. When fluctuations exceed ± 0.5 within 10° of the procedural on course, fly the approach offset by 5°on the affected side(s) of the procedural on course and apply PFN and CMN tolerances. If the 5° offset approach is satisfactory, the approach may be placed in service. Validation of deviations noted on arcs must be discussed with maintenance personnel for corrective action. If not correctable, the area in question must be restricted. An increase in the minimum EL lower scan limit may present an erroneous crosspointer indication at elevation angles below the scan limit. The elevation coverage should be restricted below the lower scan limit if the lower scan limit was raised above 0.9°.

NOTE: Increases in the minimum EL lower scan limit made after determination of normal path structure require a recheck of the EL approach guidance inside the FAF.

Figure 16-2
APPROACH ELEVATION COVERAGE
VERTICAL COVERAGE

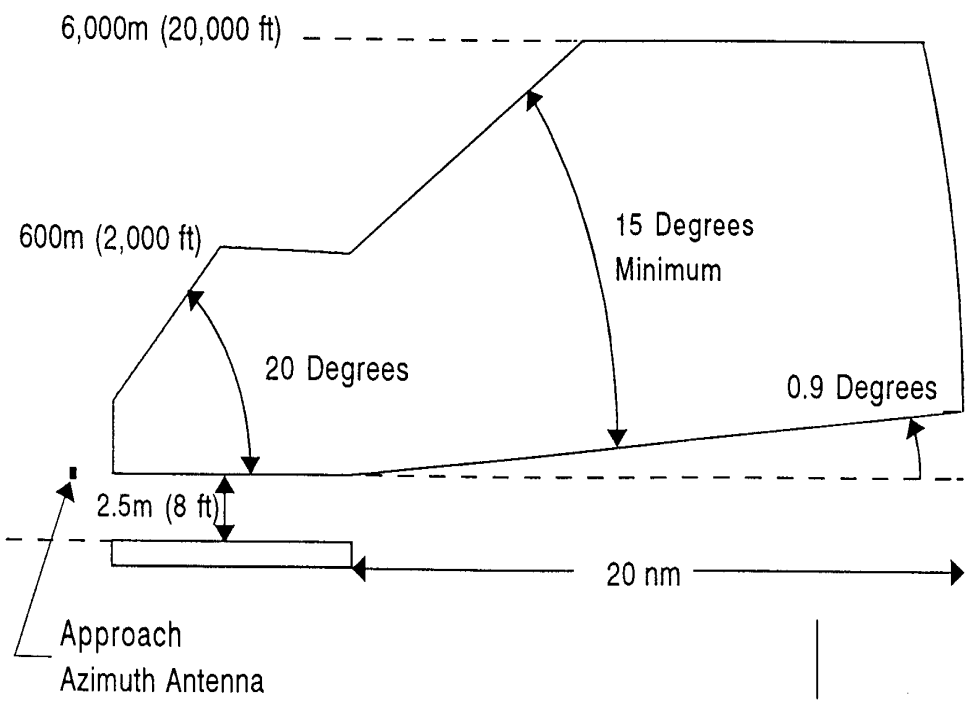

Figure 16-3
APPROACH ELEVATION COVERAGE
HORIZONTAL COVERAGE

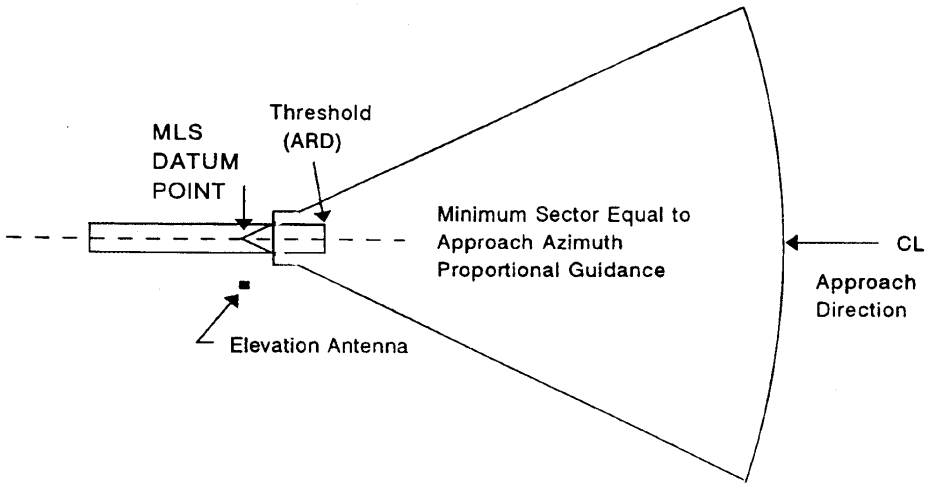

e. Approach AZ & EL. (MLS-3) The approach should be the first item checked during a commissioning, reconfiguration, or restoration. This will ensure the facilities can support the proposed or published approach, and the facilities may be optimized to the desired procedural alignment.

(1) Maneuvering. Inspect the approach while flying the designed procedural azimuth and minimum glide path, unless otherwise indicated. Start the approach at the GSI, FAF, or 6 nm, whichever is greater from runway threshold. Azimuth facilities sited along runway centerline with decision altitudes of 200 ft or less must be evaluated through Zones 1, 2, and 3 (Zones 4 and 5 if autoland or CAT II/ III operations are authorized) for all inspections requiring alignment and structure measurements; elevation guidance on these facilities must be evaluated to the ARD. All other facilities must be evaluated 100 ft below decision altitude (DA). Commissioning inspections must include an approach on the MGP from the desired service volume limits at normal power and while the facility is at minimum RF power.

(2) AFIS/ Equipment Setup. This will be a MLS-3 flight profile. The Mission Specialist may select either “AUTO”, “MAN”, OR “PILOT” for runway updating. Approved RTT and/or AFIS methods must be used for the approach evaluation. The facility error budget will provide all tolerances to be used during commissioning and periodic flight inspections. During the commissioning flight inspection; document the facility error budget on the datasheet. MCE must be established prior to application of PFE tolerances.

NOTE: Pilots must engage the following switches when appropriate:

Lear, MLS G/ P when MGP is less than 3.00° or greater than 4.00°

BE300, MLS/ MSGS whenever the MGP is anything but 3.00°

CL601, Select MAN on the Mode Selector, Press SEL button until GS is selected, then turn the Selector Knobs to dial in the desired glide slope angle (limited 2.0 to 19.9°).

HS125, Select MAN with the right selector knob, then use the center selector knobs to highlight GP and then set the glidepath.

(3) Analysis. Use this maneuver to measure azimuth and elevation adjustments and to measure MCE, MGP, AZ, EL PFE, PFN, and CMN. For azimuth facilities sited along runway centerline with a DA at or below 200 ft, the azimuth MCE must be determined in the 1.0 nm segment ending at the ARD. For other facilities use the 1.0 nm segment ending at 100 ft below DA. Report the worst PFE, PFN, or CMN found in Zones 1, 2, or 3. If AFIS reports the same value in two zones, report the announced value that is closest to threshold.

NOTE: When a restriction occurs in an area where MCE is normally analyzed, measure MCE from 1.0 nm from the start of the restriction to the start of the restriction.

(4) Other Considerations. If the MLS supports an Azimuth Only Minima, the final approach segment must be inspected. Azimuth Only approaches will be flown at a descent of 400 ft per mile (930 ft per minute at 140 knots; 800 ft per minute at 120 knots) to an altitude of 100 ft below the lowest published MDA and maintain this altitude to the MAP. If the MLS supports Visual Autoland or CAT II/ III operations, complete a roll-out. Roll-out will be inspected by crossing Point C at 100 ft, runway threshold at approximately 50 ft, and continue on the extended glide path to the touchdown point. Continue the landing roll and determine the actual course alignment for Zones 4 and 5. If the actual alignment for Zones 4 and 5 cannot be determined using this method, taxi the aircraft along the runway centerline from abeam the elevation site to Point E. Record the raw crosspointer information and mark, abeam the EL site Point D, and Point E. Manually calculate the actual course alignment, PFE, PFN, and CMN for each of the required zones.

Figure 16-4
MLS-3 FLIGHT INSPECTION LOW APPROACH

	Aircraft Configuration		
A/C	**Speed KIAS**	**Flaps**	**Gear**
CL601/ 4	140 – 180	20	DN
Lear 60	160 – 200	20	DN
BE300	140 – 160	Approach	DN
HS125	Vref+25	15	DN

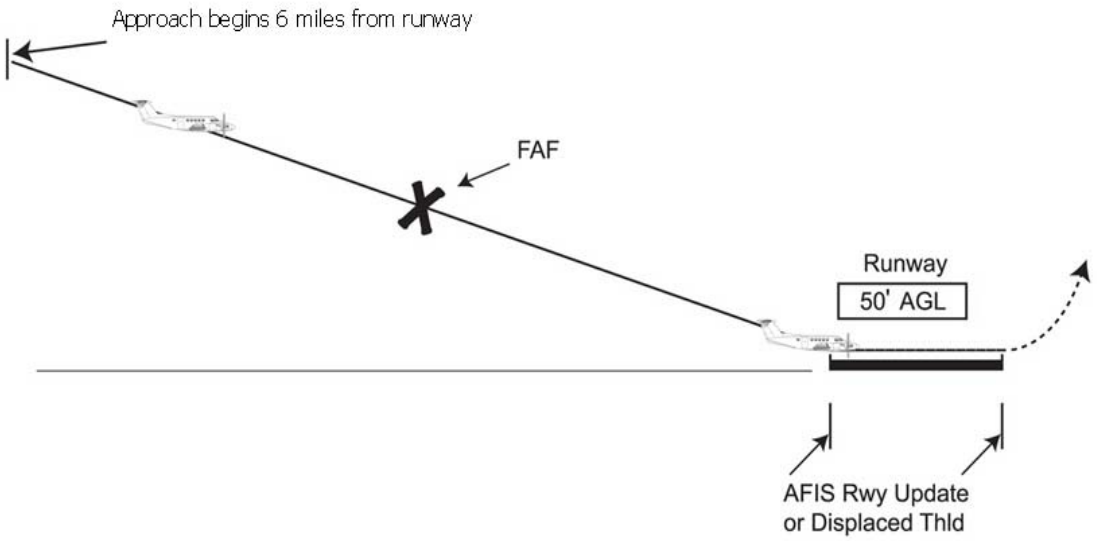

Figure 16-5
AZ/ EL APPROACH

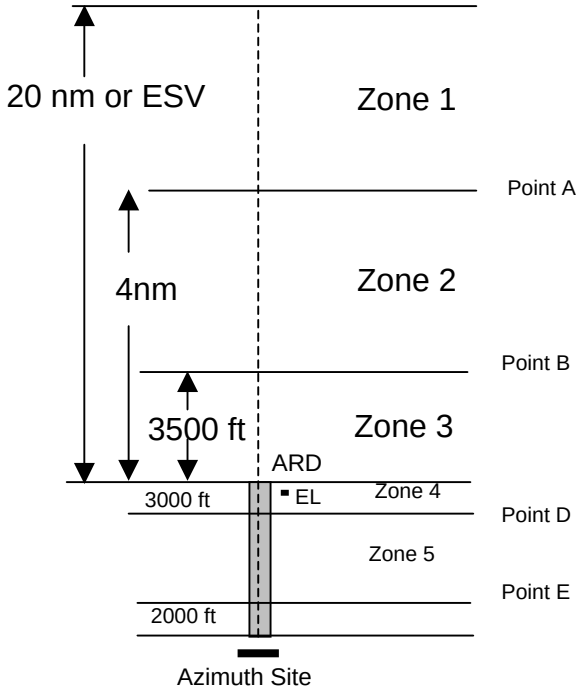

f. Azimuth Monitor. Validates the monitor parameters associated with the azimuth antenna and provides Facility Maintenance Personnel reference readings to be used in validation of facility monitoring parameters.

(1) Maneuvering. The azimuth monitor evaluation may be checked while the aircraft is parked within the proportional guidance. The aircraft should be at the maximum practical distance from the antenna while maintaining line of site. Checking the monitors airborne is the best practice. The AFIS panel will analyze PFE when checked airborne.

(2) AFIS/ Equipment Setup. MLS-3 profile can be used for checking the azimuth monitor either airborne or on the ground.

(3) Analysis. Analyze azimuth alignment and apply PFE tolerances. Facility discrepancies must be assigned if the alignment shift results in out-of-tolerance PFE at any distance on the approach.

(4) Other Considerations. MCE will be within ± 0.02° before attempting to check the monitors. If the monitors are checked on the ground, the airborne PFE is algebraically added to the AZ alignment shift. (AFIS will not compute this value on the ground). Restore to Normal when complete.

g. EL Monitor. Validates the monitor parameters associated with the elevation antenna. The angle will be raised to "High Angle" and "Low Angle" alarm conditions. For both of these checks, request an angle change of no more than ± 0.10°. High angle should be accomplished prior to the low angle because Below Path Coverage Evaluation checks are required in Low angle alarm.

(1) Maneuvering. Inspect the approach while flying the designed procedural azimuth and minimum glidepath. Start the approach at the FAF or 6 nm from runway threshold, whichever is greater. Fix Updating should be performed just like an ILS 3 maneuver. The Mission Specialist may select either "AUTO", "MAN", or "PILOT".

(2) AFIS/ Equipment Setup. This will be a MLS-3 flight profile.

(3) Analysis. Analyze elevation alignment and apply PFE tolerances. Facility discrepancies must be assigned if the elevation change results in out-of-tolerance PFE at any distance on the approach.

(4) Other Considerations. MGP will be established within ± 0.02° of the commissioned angle prior to inspecting the Elevation monitor. If the lower scan angle limit is increased to improve PFE, recheck normal EL path structure. Restore to Normal when complete.

h. Below Path Coverage Evaluation. Perform this check during a commissioning inspection. There are three runs for this inspection.

(1) Maneuvering. With the MGP selected for elevation, fly at an angle equal to (MGP degrees X 0.75)-0.25° and 2° either side of centerline.

(2) AFIS/ Equipment Setup. May be checked using MLS-3 without runway updates using raw data only. Identify the GSI and the MAP on the recordings using event marks.

(3) Analysis. Ensure a full-scale fly up indication is maintained on the elevation signal, and azimuth guidance and obstacle clearance can be maintained from the GSI to the MAP.

(4) Other Considerations. PFE, PFN, and CMN tolerances are not applied for this check. The EL facility will be in low angle alarm for this check.

i. Identification. The identification is validated by listening to the Morse code or recording Basic Data Word 6. Morse code must be readable throughout the facilities service volume.

j. DME. DME will be evaluated as a DME/ N throughout all areas of coverage. ICAO has specified MLS DME to transmit the three-letter ID. The "M" has been dropped; however, facilities previously commissioned transmitting the four letters DME ID will be left in service.

(1) Maneuvering. DME will be checked concurrent with other required checks. No additional maneuvers are needed.

(2) AFIS/ Equipment Setup. The AFIS panel will announce the DME range error.

(3) Analysis. DME Ident must be readable throughout service volume of facility. Apply applicable tolerances for range error.

(4) Other Considerations. DME tolerances will be found in FAA Order 8200.1 (Rho-Theta Chapter).

k. Out of Coverage (OCI). OCI ensures that no false angle decoding occurs outside of facility coverage areas. This is a maintenance request item, if there are procedural requirements beyond the service volume.

(1) Maneuvering. Fly an orbit of 6 to 10 miles about the azimuth facility, and at an altitude as close to MGP that allows line of site with the MLS facilities.

(2) AFIS/ Equipment Setup. This will be checked in the MLS-1 mode.

(3) Analysis. During the orbit, note the position of any AZ or EL signals lasting longer than 4 seconds or 1.5° of arc, whichever is greater.

(4) Other Considerations. If AZ or EL signals last longer than 4 seconds or 1.5°, whichever is greater, return to the area after completing the orbit and manually program the AZ or EL into the receiver. If the signal can be locked onto and flown as a radial, even though OCI is present, the problem must be corrected or the facility must be restricted.

Table 16-1

Reference ARC Altitude

MGP ANGLE	MGP @ 20 nm	MGP x 0.75 @ 5 nm	MGP x 0.75 @ 6 nm	MGP x 0.75 @ 7 nm	MGP x 0.75 @ 8 nm	MGP x 0.75 @ 9 nm	MGP x 0.75 @ 10 nm
2.5	5659	1017	1225	1436	1648	1862	2077
2.6	5871	1056	1273	1491	1711	1933	2157
2.7	6084	1096	1321	1547	1775	2005	2237
2.8	6297	1136	1369	1603	1839	2077	2316
2.9	6509	1176	1416	1659	1903	2148	2396
3	6722	1216	1464	1714	1966	2220	2476
3.1	6935	1256	1512	1770	2030	2292	2555
3.2	7147	1295	1560	1826	2094	2363	2635
3.3	7360	1335	1608	1882	2158	2435	2715
3.4	7573	1375	1655	1937	2250	2507	2794
3.5	7786	1415	1703	1993	2285	2579	2874
4	8851	1614	1942	2272	2604	2937	3273
4.5	9917	1814	2182	2552	2923	3296	3672
5	10985	2013	2421	2831	3243	3656	4071
5.5	12054	2213	2661	3111	3562	4015	4470
6	13126	2413	2901	3391	3882	4375	4870

SECTION 2. MOBILE MICROWAVE LANDING SYSTEM

16.20 INTRODUCTION

a. The MMLS is a tactical landing aid designed for rapid installation. MMLS may be installed in a Split-Site Configuration or in a collocated configuration. The Split-Site Configuration is essentially the same as any other MLS installation. For Split-site installations, the standard flight inspection procedures of Paragraph 16.11 apply.

b. **In the Collocated Configuration,** the Azimuth (AZ) and DME are sited with the Elevation (EL) and provide a computed centerline approach for a normal runway or assault-landing zone (ALZ). The antenna is typically 150 to 300 ft from centerline with distance from threshold dependent upon desired Minimum Glide Path (MGP). The AZ guidance is boresighted parallel with procedural centerline.

c. **Procedural centerline** is usually runway centerline, but unusual siting conditions may cause an offset situation. The standard flight inspection receiver will see the course as parallel to the procedural centerline and will not be guided to the runway. In the Collocated Configuration, a specialized receiver (e.g., CMLSA or multi-mode Receiver) capable of developing a "Computed Centerline," uses the AZ and DME to compute a procedural centerline based upon the facility data words.

d. The MMLS does not transmit a clearance signal and will be restricted laterally if the proportional guidance limits are reduced from the normal ± 40°. MMLS facilities are designed for 15 nm Service Volume. In addition, the RF power of the MMLS is monitored but not adjustable. The 20 nm checks flown at the normal RF power will simulate the power alarm condition. All DOD MMLS facilities must be restricted beyond 15 nm. Standard Service Volume and the coverage checks may be further reduced to 2 nm greater than the farthest procedural need; the facility must be restricted beyond the checked distance. Most restrictions will be due to reflections or signal screening. These restrictions should be placed at the distance of occurrence.

If an MMLS is confirmed to have inadequate signal strength, it must be restricted beyond a distance equal to 0.75 times the distance of the out-of-tolerance signal.

16.21 ACTIVITIES REQUIRING A CONFIRMING FLIGHT INSPECTION:

a. Major changes in local obstructions or buildings that may affect the signal strength, coverage, or courses.

b. Changing CEU or DEU require confirming flight inspection.

c. Facility operating frequency changed.

d. Replacement or repositioning of an azimuth, elevation, or DME antenna.

e. Changes in the nominal electronic boresight alignment.

f. Change in data words that affect azimuth or elevation alignment.

16.22 EXAMPLE BEST PRACTICE COMMISSIONING TYPE CHECKLIST.

The following checklist is meant as a guide only and will not replace the official checklists provided in FAA Order 8200.1. It provides a suggested sequence of steps to aid in the crewmembers' preparation for commissioning type flight inspections. The steps can be modified based on Air Traffic or other various considerations.

Run	Configuration	Type	Start Distance	Remarks
1	Normal	MLS-3	FAF or 6.0 nm from threshold, whichever is further	
2	AZ ALARM	MLS-3	FAF or 6.0 nm from threshold, whichever is further	Left alignment shift
3	AZ ALARM	MLS-3	FAF or 6.0 nm from threshold, whichever is further	Right alignment shift
4	Normal	MLS-3	FAF or 6.0 nm from threshold, whichever is further	Accomplished to ensure MCE is returned to normal
5	EL ALARM	MLS-3	FAF or 6.0 nm from threshold, whichever is further	High angle
6	EL ALARM	MLS-3	FAF or 6.0 nm from threshold, whichever is further	Low angle
7	EL ALARM	MLS-3	FAF or 6.0 nm from threshold, whichever is further	Low angle/2° right/Clearance Below Path
8	EL ALARM	MLS-3	FAF or 6.0 nm from threshold, whichever is further	Low angle/2° left/Clearance Below Path
9	EL ALARM	MLS-3	FAF or 6.0 nm from threshold, whichever is further	Low angle/Centerline/Clearance Below Path
10	Normal	MLS-3	FAF or 6.0 nm from threshold, whichever is further	
11	Normal	MLS-2	20.0 nm from antenna	10° past the published front course azimuth (equipment side)/Vertical Coverage
12	Normal	MLS-2	20.0 nm from antenna	10° from antenna boresight azimuth or the minimum proportional guidance limit whichever is further (non equipment side)/Vertical Coverage
13	Normal	MLS-2	20.0 nm from antenna	Centerline/Vertical Coverage
14	Normal	MLS-1	20.0 nm from threshold	45°-45°/Service Volume Arc (Lateral Coverage)
15	Normal	MLS-3	20.0 nm from threshold	Simulated RF Power Check
16	Normal	MLS-1	10.0 nm from threshold	45°-45°/Reference Arc
17	Normal	MLS-3	FAF or 6.0 nm from threshold whichever is further	Computed centerline approach (CMLSA)

Other Considerations

- If commissioning an MMLS with a backup CEU, then perform "CEU Change" checklist on backup CEU and "Periodic" checklist on both CEU(s) IAW 8200.1 Chapter 16.
- On AFIS Facility Data Page, MAP-TH DS should be change to 100' below the decision altitude distance.
- On AFIS Facility Data Page, toggle to what configuration the MMLS is in (e.g., CO-LOCATED, SPLIT SITE). This is a very important step as it tells the computer when to stop collecting data.
- On AFIS Facility Data Page, change the DIST MAP-TH distance to be 100' below the decision altitude distance.
- Pseudo runway updating is no longer required if results are satisfactory.

16.23 FLIGHT INSPECTION PROCEDURES

a. Coverage Arcs. Arcs are flown only to measure the proportional guidance limits. The minimum limit on the equipment side of the runway is 10° beyond the published front course azimuth. On the non-equipment side, the minimum is the greater of either 10° beyond the azimuth from the MAP to the AZ antenna **OR** 5° beyond the azimuth from the threshold to the AZ antenna (See Figure 16-6). EXCEPTION: For ALZ operations where touchdown within 500 ft of threshold is essential, the non-equipment side limit may be decreased, as long as coverage is provided to at least 100 ft below Decision Height. To preclude difficulties with the vertical coverage check if the proportional guidance limit is set to the same value as the minimum required coverage, attempt to widen the proportional guidance at least an additional 2°.

b. Vertical Coverage. This check will be accomplished by a level run starting at 20 nm from the antenna. The azimuth for the vertical coverage checks on the equipment side of the runway is 10° past the published front course azimuth. On the non-equipment side, fly the further of either 10° from antenna boresight azimuth or the minimum proportional guidance limit. If the proportional guidance limits are set at the minimum required limits and cannot be expanded, it is permissible to fly the vertical coverage 2° inside of the minimum limits of proportional guidance. Document on the flight inspection report if these runs are flown inside of the standard azimuths. (See Figure 16-6.)

c. Computed Centerline Approaches. Techniques for checking computed centerline procedures depend on the equipment used for the checks. Some flight inspection equipment is limited to checking only the antenna boresight signal while others can evaluate the computed centerline.

(1) If the flight inspection equipment is capable of determining structure and alignment of the computed centerline and elevation signal while flying the approach course, measure these parameters on the computed centerline IAW the AFIS manual. The procedural evaluation may be accomplished using the AFIS only if the aircraft can be navigated along the computed centerline by reference to the AFIS.

NOTE: If results are unsatisfactory, actual boresite must be flown.

(**2**) **Azimuth.** If using theodolite or if AFIS is not capable of measuring the computed centerline, the azimuth boresight signal must be evaluated. When using theodolite, position the instrument to be in-line with the antenna center and use normal procedures. To inspect the azimuth boresight using AFIS, create a "pseudo runway". The centerline of this "runway" passes throught the AZ antenna. Runway updates are through markers on centerline at each end of the "runway". The television positioning system (TVPS) must be used unless suitable visual cues are present to accurately determine centerline and runway ends. Facility data is changed in the AFIS to use the "pseudo runway" and must be used as the reference for AZ alignment and structure measurements. If using the pseudo runway concept, determine azimuth alignment in 1 nm segment, ending at the MAP. When using AFIS, actual, or "pseudo runway" data may be used for coverage arcs or vertical coverage checks. Coordinates of the "pseudo runway" threshold and updating method used must be documented on the commissioning report and facility data sheet.

NOTE: If measuring to the boresite, the following must be changed on the AFIS Facility Data page:

- AZ Offset: Change to 0.0 ft
- Threshold Coordinates: Change to pseudo threshold values
- DME Offset: Change to 0.0 ft (Changing this value may induce slight inaccuracy in DME for NCU updating position).

The TH HGT and RE HGT will cause errors in EL results but do NOT need to be changed, as they have no effect on AZ results. Do not attempt to measure the EL angle on a run using Pseudo Runway data unless the pseudo runway ends are on hard surface taxiways level with the actual runway ends and measured path angles are the same as those found using the actual runway runs. If the angles are the same, document on the commissioning report and the facility datasheet. Angles derived from the pseudo runway data may be used, but the structure is not valid for correlation to actual procedural centerline.

(3) Elevation. Actual runway data and normal procedures must be used for all elevation angle and structure validation when using theodolite or AFIS with or without computed centerline capability.

(4) Procedural Evaluation. On commissioning and for any change in procedural azimuth or changes in data words affecting azimuth determination, the procedure must be validated using a "computed centerline" receiver or AFIS capable of providing equivalent pilot indications. For periodic inspections including SIAP and COV checks, a standard receiver (using Pseudo Runway procedures) may be used if:

(a) Azimuth PFE is within the tolerances specified in FAA Order 8200.1, Chapter 16.

(b) Basic and Auxiliary Data Words critical to computed centerline determination match those used during final approach course certification of the current SIAP. (See Table 16-2)

d. Monitors. Mobile Microwave Landing System (MMLS) AZ and EL monitor limits must be evaluated at the actual alarm points. Optimize the AZ and EL Mean Course Errors to within 0.05° before checking monitor PFE limits. Figure 16-7 depicts the azimuths to be flown for coverage below path evaluations.

e. MMLS Data Words. The MMLS Data Words generated by the equipment are calculated from the equipment siting and procedural information input by the installer. The equipment may use an input to generate more than one data word, and some of these words are labeled differently in the MMLS than the received words. The following table translates these words.

Table 16-2
MMLS DATA WORD TRANSLATOR

Word	Description	MMLS Term	AFIS Term	Least Signification Bit
Basic 1	AZ ant to Threshold Dist	DATUM/THR (5)	F DIS	100 mtr
	AZ proportional neg limit	AZ LOW LIM	F PNLM	2°
	AZ proportional pos limit	AZ UPR LIM	F PPLM	2°
	Clearance signal type	(1)	C TYPE	0=pulse/1=scan
Basic 2	Minimum glidepath angle	MIN GP	E MPA	0.1°
	Apch EL Status	FLD MON	EL/F/BZ	0=abnormal/1=normal
	Apch AZ Status	FLD MON	EL/F/BZ	0=abnormal/1=normal
	Back AZ Status	(1)(4)	EL/F/BZ	0=abnormal/1=normal
	DME Status	DEU/NORM/BYP	DME ST	(2)

Word	Description	MMLS Term	AFIS Term	Least Signification Bit
Basic 3	AZ Beamwidth	(1)	F BMW	0.5°
	EL Beamwidth	(1)	E BMW	0.5°
	DME Distance	AZ/DATUM DIST	DDIS	12.5 mtr
Basic 4	AZ Mag Orientation	AZ MAG ORIENT	F ALN	1° (3)(6)
	Back AZ Orientation	(4)	B ALN	1°
Basic 5	Back AZ neg prop limit	(4)	B PNLM	2°
	Back AZ pos prop limit	(4)	B PPLM	2°
	Back AZ Beamwidth	(4)	B BMW	0.5°
Basic 6	MLS Identification	3-letter entry	FAC ID	
AUX 1	AZ antenna offset	AZ OFFSET DIST	F OFF	1 mtr (8)(6)
	AZ antenna to Datum Point distance	AZ/DATUM DIST	F DIS	1 mtr (6)
	AZ alignment with Rwy C/L	AZ W/CL	F ALN	0.01° (8)(6)
	AZ coordinate system	(1)	AZ C/P	0=Conical/1=planar
	AZ antenna phase center height	AZ ANT HGT	AZ HT	1 mtr
AUX 2	EL antenna offset	EL OFFSET DIST	E OFF	1 mtr (8)
	Datum point to threshold distance	DATUM/THR	MLS DIS	1 mtr (6)
	EL antenna phase center height	EL ANT HGT	E HT	0.1 mtr
	Datum point elevation	DATUM ELEV	MLS HT	1 mtr (9)
	Threshold Height	THRESH HGT	RWY HT	0.1 mtr
AUX 3	DME offset	AZ OFFSET DIST	DME OFF	1 mtr (8)(6)
	DME to datum point distance	AZ/DATUM DIST	DME DIS	1 mtr (6)
	DME antenna height	AZ ANT HGT	DME HT	1 mtr
	RWY stop end distance	STOP END DIS	RWY SND	1 mtr (9)
AUX 4	Back AZ ant offset	(4)	B OFF	1 mtr (8)
	Back AZ to datum point distance	(4)	B DIS	1 mtr
	Back AZ align with rwy C/L	(4)	B ALN	0.01° (8)
	Back AZ coord sys	(4)	BZ C/P	0=Conical/1=Planar
	Back AZ ant phase center height	(4)	B HT	1 mtr

NOTES:

1. Factory set, no field input

2. DME status codes:
0 0 DME inoperative or not available
0 1 Only initial approach or DME/N available (normal MMLS status)
1 0 Final approach mode std 1 available
1 1 Final approach mode std 2 available

3. Magnetic orientation is 180° from procedural front course azimuth.

4. Back azimuth not used.

5. Split-site configuration is combined value: AZ/DATUM DIST DATUM/THR

6. Computed centerline critical values

7. Distances and heights are with respect to MLS datum point.

8. Negative number indicates left of C/L looking from threshold to stop end.

9. May be zero or actual value.

f. ID. To preclude confusion with DME indications, ensure the MMLS identification is not the same as any other DME source used for any approach or missed approach guidance.

g. DME. When the MMLS is placed in an abnormal configuration for monitor checks or adjustments, the DME continues transmitting, but the pulse spacing is changed to 33 microseconds. With the normal "Y" channel DME spacing of 30 microseconds, some receivers may remain locked onto the DME signal. This indication is not hazardous and should be disregarded.

Figure 16-6
MMLS COVERAGE VALIDATION AND MINIMUM PROPORTIONAL GUIDANCE

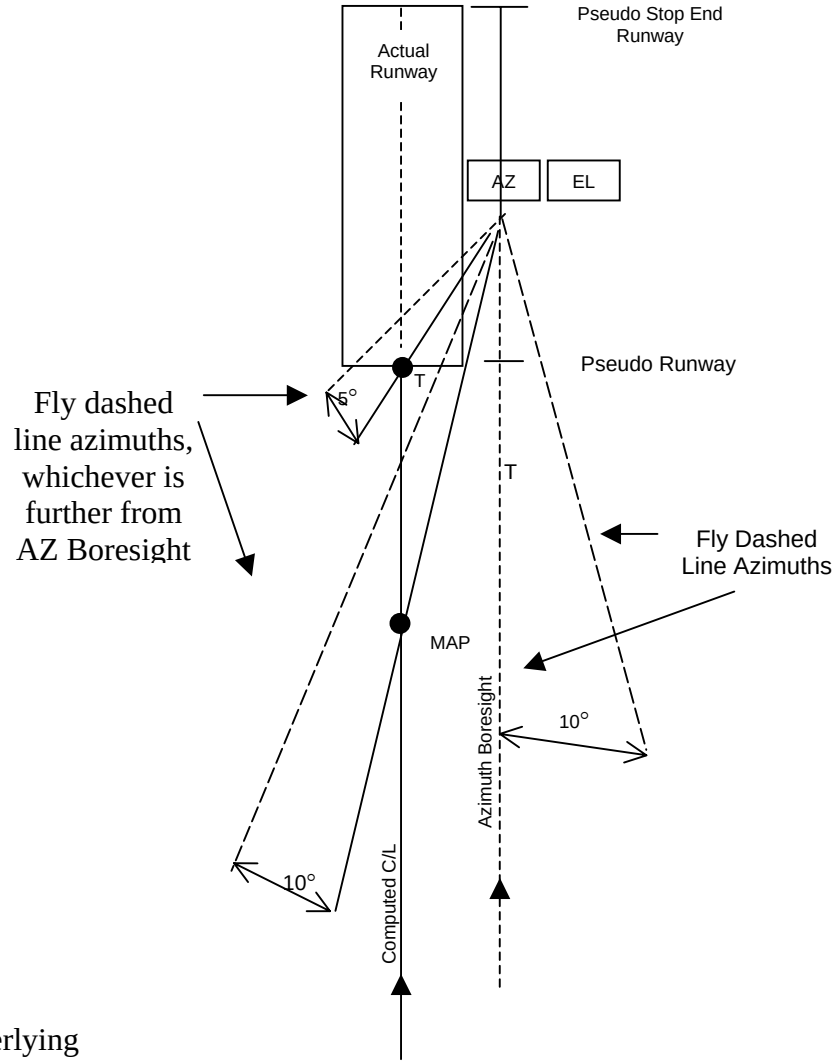

Bearings overlying MAP and threshold are on the Facility Data Sheet

Figure 16-7

AZIMUTHS FOR COVERAGE BELOW PATH (COMPUTED CENTERLINE FACILITIES)

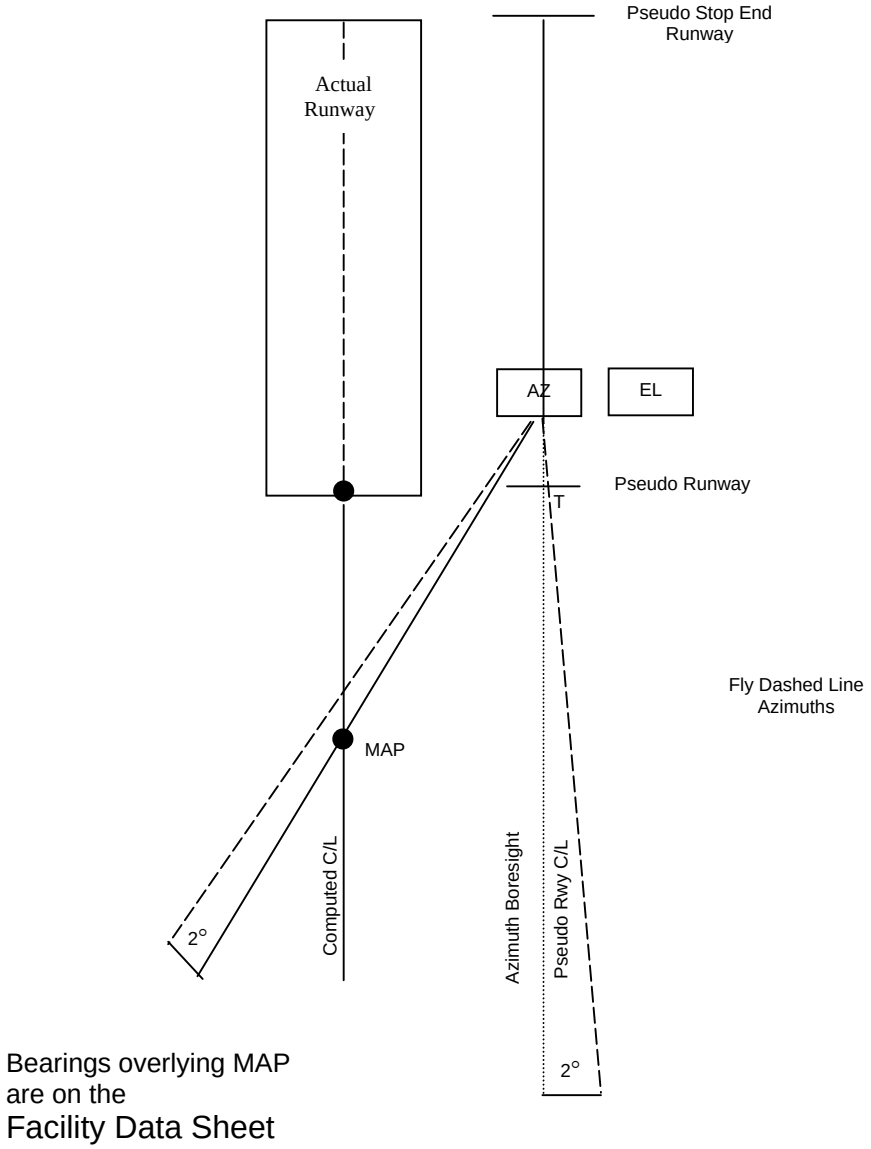

Bearings overlying MAP are on the Facility Data Sheet

CHAPTERS 17 – 19

RESERVED

CHAPTER 20. FLIGHT INSPECTION OF VFR AERONAUTICAL CHARTS

TABLE OF CONTENTS

Paragraphs	*Title*	*Pages*
20.10	INTRODUCTION	20-1
20.11	PREFLIGHT REQUIREMENTS	20-1
20.12	DETAILED PROCEDURES	20-2
20.13	ANALYSIS AND EVALUATION	20-2

CHAPTER 20. FLIGHT INSPECTION OF VFR AERONAUTICAL CHARTS

20.10 INTRODUCTION. This chapter describes the procedures used to perform flight inspection of FAA Visual Flight Rules (VFR) Aeronautical Charts. These include Sectional Aeronautical Charts and their associated Terminal Area and VFR Flyway Planning Charts, Helicopter Route Charts, and the Grand Canyon VFR Aeronautical Chart. Data gathered is used to update VFR charts and obstruction data for the FAA Minimum Safe Altitude Warning System (MSAW) program.

a. Sectional Aeronautical Chart. Sectional Aeronautical Charts are designed for visual navigation use by slow and medium speed aircraft. The topographic information consists of contour lines, shaded relief, drainage patterns, and an extensive selection of visual checkpoints and landmarks used for flight under VFR. Cultural features include cities and towns, roads, railroads, and other distinct landmarks. The aeronautical information includes visual and radio aids to navigation, airports, controlled airspace, special-use airspace, obstructions,and related data.

b. Terminal Area Chart (TAC). The TAC depicts airspace designated as Class B. While similar to Sectional Charts, the TAC has more detail on a larger scale chart. The TAC is used by pilots operating to and from airfields underlying or near Class B airspace.

c. Charted VFR Flyway Planning Chart. This chart is printed on the reverse side of selected TAC Charts. The coverage is the same as the associated TAC. Flyway planning charts depict flight paths and altitudes recommended for use to bypass high traffic areas. Ground references are provided as a guide for visual orientation.

d. Grand Canyon VFR Aeronautical Chart. This chart covers the Grand Canyon National Park area. It is designed to promote aviation safety, flight free zones, and to facilitate VFR navigation in this popular area. The chart contains aeronautical information for general aviation VFR pilots on one side and commercial VFR air-tour operators on the other side.

e. Helicopter Route Chart. This chart displays aeronautical information useful to helicopter pilots navigating in areas of high concentrations of helicopter activity. Information depicted includes helicopter routes, heliports with associated frequency and lighting capabilities, NAVAIDs, and obstructions. In addition, pictorial symbols, roads, and easily identified geographical features are portrayed.

20.11 PREFLIGHT REQUIREMENTS. Prior to each VFR Aeronautical Chart flight inspection mission, the inspector(s) will meet with the National Aeronautical Charting Office (NACO) VFR Flight Inspection Program (VFIP) coordinator and cartographers to discuss any issues for the inspection.

When VFR Aeronautical Chart flight inspection operations will be conducted in areas affecting air traffic, the inspector shall coordinate with Air Traffic Control (ATC).

20.12 DETAILED PROCEDURES. Current chart copies are compared with the corresponding geographic areas. The inspector will evaluate and verify topographic and cultural data (roads, railroads, power lines, antennas, urban areas, etc.) depicted on the charts for accuracy and navigational usefulness.

a. Flight Line Track. Flight line tracks will be established to ensure systematic and complete coverage of the entire chart area. Cardinal directions should normally be used unless limited by terrain, localized weather, ATC, or other factors. Flight line spacing may vary to accommodate different levels of visibility and densities of charted features, but should not normally be spaced more than 12 nm.

b. Altitudes. The flight line track shall be flown at altitudes that will ensure that the pilots can clearly observe the relative position of all objects and their characteristic details. The inspection should normally be performed at altitudes between 2,000 to 5,000 feet above ground level (AGL).

c. Weather. VFR Aeronautical Chart flight inspection shall be conducted in VFR conditions.

20.13 ANALYSIS AND EVALUATION. Inspectors shall record their notes on an annotated VFR chart field sheet. Field sheets are considered source data and shall be retained and archived by NACO.

The inspector(s) will recommend corrections and changes and resolve questions and discrepancies raised by NACO cartographers that cannot be resolved by source review in the office.

CHAPTER 21. HELICOPTER

(Reserved)

CHAPTER 22. FLIGHT INSPECTION OF EXPANDED SERVICE VOLUME (ESV) FOR GROUND BASED NAVIGATIONAL AIDS

TABLE OF CONTENTS

Paragraphs	*Title*	*Pages*
22.10	INTRODUCTION	22-1
	a. Standard Service Volume (SSV)	22-1
	b. Flight Inspection Standard Service Volume (FISSV)	22-1
	c. Expanded Service Volume (ESV)	22-1
	d. Operational Service Volume (OSV)	22-1
22.11	DETAILED PROCEDURES	22-1
	a. Rho-Theta	22-1
	b. Instrument Landing System (ILS)	22-4
	c. Microwave Landing System (MLS)	22-7
	d. Nondirectional Beacon (NDB)	22-7
	e. Distance Measuring Equipment (DME)	22-8
	f. Area Navigation (RNAV)	22-8
22.12	EXPANDED SERVICE VOLUME PROCESS	22-9
	a. FMO Approved Limits	22-9
	b. Clarity of Flight Inspection Results	22-10
	c. Expanded Service Volume (ESV) Facilities	22-10

This Page Intentionally Left Blank

CHAPTER 22. FLIGHT INSPECTION OF EXPANDED SERVICE VOLUME (ESV) FOR GROUND BASED NAVIGATIONAL AIDS

22.10 INTRODUCTION. This chapter provides information concerning flight inspection's role with an Expanded Service Volume (ESV) and the ESV process. Service Volume (SV) is defined as that volume of airspace surrounding a NAVAID within which a signal of usable strength exists and where that signal is not operationally limited by co-channel interference.

NOTE: For VOR/ TACAN/ DME and ILS, the following definitions are used:

a. Standard Service Volume (SSV) - That volume of airspace defined by the national standard.

b. Flight Inspection Standard Service Volume (FISSV) is defined in the appropriate chapter for the specific facility type.

c. Expanded Service Volume (ESV) - An ESV is a volume of airspace, outside of a facility's Standard Service Volume (SSV), that is approved for operational use by Spectrum Engineering, and where a facility meets the applicable flight inspection requirements. An ESV is validated by flight inspection when requested by the FAA's Air Traffic Service or procedure specialist and approved by frequency management of the Airway Facilities Division.

d. Operational Service Volume (OSV) - The airspace available for operational use. It includes the following:

(1) The SSV excluding any portion of the SSV which has been restricted.

(2) The ESV

22.11 DETAILED PROCEDURES

a. Rho-Theta. Expanded Service Volumes (ESV(s)) are required only when procedural use is predicated on a NAVAID's performance outside of the SSV. Evaluate ESV(s) on one transmitter only. When required, an ESV may be revalidated by orbital flight at the ESV distance and lowest approved altitude. Lateral limits of the area should encompass allowable radial misalignment or applicable fix displacement area. There is no need to inspect the upper limits of an ESV unless interference is reported or suspected.

In most applications, the VOR is the primary facility supporting procedural use (i.e., airways, fixes, intersections). When evaluating facilities supporting procedural uses, record all component signals. If any NAVAID component (i.e., VOR, TAC, or DME) does not meet flight inspection parameter tolerances, document the results as follows.

(1) Within the applicable 25 or 40 nm flight inspection service volume, complete the appropriate flight inspection report form(s) and restrict the NAVAID accordingly.

(2) Beyond the applicable flight inspection service volume but within the SSV, complete the appropriate flight inspection report form(s) and document flight inspection results on the procedures package forms. No facility restriction is required.

(3) Beyond the applicable SSV, complete the appropriate flight inspection form(s), ESV forms, noting the component(s) which will not support the ESV, and document the results on the procedures package forms. No facility restriction is required.

For flight inspections beyond the applicable 25 or 40 nm distance, complete only the fields of the flight inspection report forms for the NAVAID components identified for procedural use.

(4) En route Radial Fixes located beyond the FISSV

(a) If the fix is located beyond the FISSV of any facility that supports the fix, the appropriate fix displacement coverage evaluation must be accomplished for that facility. When establishing a fix that is located beyond the FISSV, the station(s) are evaluated on the furthest side from the facility of the fix to ensure that usable signals exist. Evaluations must include course sensitivity or modulations, identification, roughness and scalloping, alignment, and signal strength.

Figure 22-1

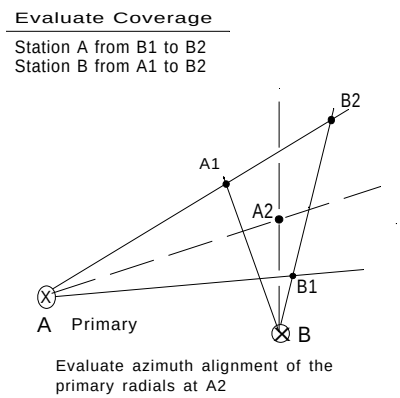

The radials of the primary facility are evaluated at ± 4 nm or ± 4.5° either side of the primary radial, whichever is greater. The crossing radial is evaluated at ± 3.6°.

> **NOTE:** The primary facility provides primary course guidance to the intersection. If either facility can be the primary, then evaluate both at ± 4 nm or ± 4.5°. If the crossing facility is an NDB, the primary facility is evaluated ± 5° of the NDB on-course bearing. In Figure 22-1, if Station B were an NDB providing the crossing radial, A1 and B2 would each be 5° from the NDB crossing bearing, and Station B would be evaluated from A1 to B2.

(b) Coverage Evaluation. Evaluate the radials of the primary facility at ± 4 nm or ± 4.5°, whichever is greater (3.6° for crossing radials). Note that at 50.8 nm, 4nm equals 4.5° off course. The two methods for evaluating the fix displacement are explained below.

Standard Method

- Beyond 40 nm but within 50.8 nm of the primary facility, calculate the degrees off course that equals 4 nm (See Appendix 3, Figure A3-7)
- Beyond 50.8 nm the offset radials will be ± 4.5°
- In the example (Figure 22-2), either facility is primary
- To evaluate XXX fix displacement, fly YYY R354.5 from XXX R025.6 to R014.4
- To evaluate YYY fix displacement, fly XXX R014.4 from YYY R345.5 to R354.5

Alternate Method

- Beyond 40 nm but within 50.8 nm, fly an arc about the facility at the fix distance plus 4 nm or 4.5°, whichever is greater (3.6° for crossing radials)
- Beyond 50.8 nm the arc remains 4.5°, but the distance added to the arc will increase as the distance outbound increases.
- In the example (Figure 22-2), either facility is primary
- To evaluate XXX fix displacement, fly from XXX R25.6 to R014.4 at 45.17 nm (41 nm plus 4.17 nm which equates to 4.5° at 53 nm)
- To evaluate YYY fix displacement, fly from YYY R345.5 to R354.5 at 57 nm (53 nm plus 4 nm which is the greater of 4.5° or 4 nm at 41 nm)

(c) Stand-Alone DME Fixes are evaluated for coverage ± 4 nm or 4.5^0 (whichever is greater) at 5 nm greater than the fix distance.

Figure 22-2

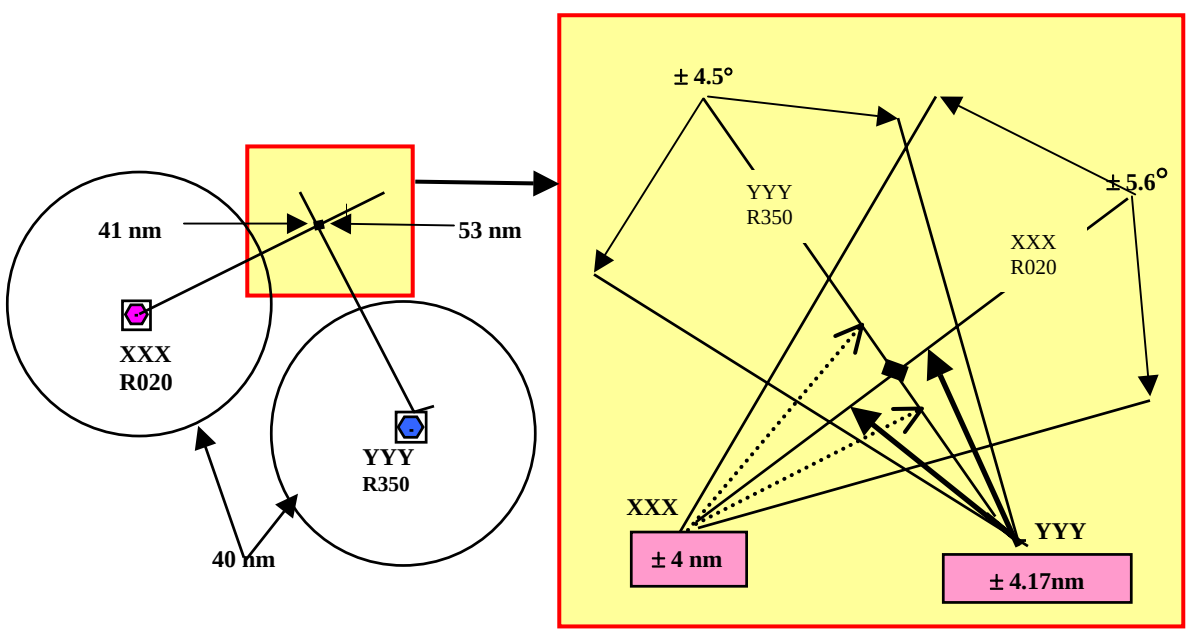

b. Instrument Landing System (ILS). When an operational requirement exists to use either or both the localizer and glide slope to altitudes and/or distances beyond the normal service volume, the facilities must be inspected to the expanded altitudes and/or distances (in accordance with the respective RF alarm reference checks) to determine that facility performance for the required parameters meets tolerances. Place particular emphasis on signal strength, interference, clearances, and structure. If a localizer or glide slope cannot support ESV requirements, the ESV must be denied. The facility must not be classified as restricted solely because it fails to support the ESV. Check ESV(s) during a commissioning inspection, when new procedures are developed or changed so as to require localizer or glide slope use beyond the normal service volume, or on appropriate special inspections (e.g., user complaints).

(1) Localizer. The two most common ESV(s) are those to support transitions and those to support localizer interception at greater than normal distances. In either case, the validated minimum altitude in the ESV area may be higher than the lower standard altitude (LSA) within the SSV. These minimum altitudes, as well as the maximum authorized, must be specifically documented on the flight inspection report and the facility data sheet. Validate a localizer ESV using the steps below.

Localizer RF Power Monitor ESV Validation

Step	Maneuvering	Localizer	AFIS	Analysis
1	Fly a 10°-10° arc across the localizer course at the ESV distance and the highest ESV altitude.	Course Reduced RF Power, *Clearance Reduced RF Power	ILS-1	Check for interference, signal strength, clearances, flag alarm, and identification.
2	Fly a 10°-10° arc across the localizer course at the ESV distance and the lowest ESV altitude.	Course Reduced RF Power, *Clearance Reduced RF Power	ILS-1	Check for interference, signal strength, clearances, flag alarm, and identification.
3	Proceed on course, inbound from the ESV distance to 18 nm (25 nm for ICAO Service Volumes) from the localizer antenna at the lowest altitude.	Course Reduced RF Power, *Clearance Reduced RF Power	ILS-3	Check for interference, signal strength, flag alarm, structure, and identification

(* Dual Freq Only)

NOTE: If the ESV includes one procedural altitude, only one ESV arc is required, and the ESV will be approved at that one altitude.

(2) Glide Slope. To validate an ESV, calculate the altitude at 0.45 times the commissioned angle at the ESV distance. Use that altitude to fly the checks listed below, starting no closer than the ESV distance. The ESV checks replace the standard 10-mile checks. If the facility is unsatisfactory, perform the ESV check at a higher altitude that provides 150 μA fly-up indications and coverage requirements. Approve the ESV at the requested altitude and distance if these requirements can be met at any altitude between 0.45 times the commissioned angle and the requested ESV altitude.

Maneuvering	Glide Slope	AFIS	Analysis
At an altitude .45 times commissioned angle at the ESV distance and on the localizer course, fly inbound at the ESV distance from the facility through the glidepath sector until reaching clearance above the path.	**Reduced power (both primary and clearance transmitters for capture effect and endfire glide slopes).**	ILS-2	Signal strength Fly-up/ Fly-down Flag alarm
At an altitude .45 times commissioned angle at the ESV distance and 8° right of localizer course, fly inbound at the ESV distance from the facility through the glidepath sector until clearance above the path is received.	Same as above	ILS-2	Same as above
At an altitude .45 times commissioned angle at the ESV distance and 8° left of localizer course, fly inbound from 10 nm from the facility through the glidepath sector until reaching clearance above the path.	Same as above	ILS-2	Same as above

Glide Slope RF Power Monitor ESV Validation

NOTE: Endfire. The endfire glide slope antenna array is oriented toward the runway. The normal fly-up/fly-down signal ends at approximately 5° on the antenna side of the runway; therefore, you will have only 150 Hz clearance signal at 8° on the antenna side of the runway.

NOTE: Glide slope structure must be analyzed while flying inbound on the glidepath and localizer course from the ESV distance to 10 miles from the glide slope antenna. This evaluation may be conducted in normal or RF reduced power setting.

(3) Reporting Fixes, Transition Areas, SID(s)/ DP(s), STAR(s), and Profile Descents. Refer to Figure 22-3. The localizers/ SDF, or LDA may be used to support fixes, or departure, en route, and arrival procedures. Transitions may be published through airspace which are beyond the localizer, SDF, or LDA service volume. Under these circumstances, navigation is accomplished using some other facility such as VOR or NDB. If the fix is not contained within the localizer and/or glide slope SSV (see definition in Appendix 1), an ESV must be established to support the procedure.

(a) Required Coverage (See Figure 22-3)

1 LOC (A) B1 to B2.

2 VOR (B) A1 to B2 (R ± 4.5°).

3 VOR (B) A3 to B4.

(b) Transitions. When a transition (or missed approach routing) is designed to traverse localizer course Sector 3 or air space which is outside the commissioned service volume, and the transition termination point is not identified with a facility other than the localizer course, check clearance and coverage throughout the entire transition air space at the minimum authorized altitudes. This will normally be an approach segment from a facility or fix to intercept a localizer final approach. An ESV must be established for areas outside the ILS SSV. Termination points not requiring clearance validation are: DME Fixes on transition radial, waypoint, Compass Locator, Lead Radials, fixes made up from other than the localizer, and "Radar Required" fixes. Examples of a transition requiring clearances would be a radial to the localizer only or a radial to a marker beacon on the localizer course.

EVALUATE COVERAGE (See Figure 22-3)
LOC (A) B to A2
VOR (B) B to A2

(c) Standard Instrument Departure (SID(s))/ Departure Procedure (DP(s)). Check on-course structure throughout the area of intended use. Check clearance in Sector 1 at the termination point at the minimum authorized altitude.

(d) Standard Terminal Arrival Route (STAR(s)) and Profile Descents. Fly these procedures as proposed or as published. Check facility performance when checking STAR(s) and profile descents with fixes.

Figure 22-3

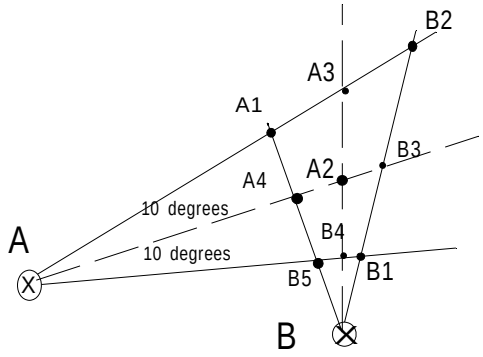

c. Microwave Landing System (MLS). An ESV comprises the area outside of an MLS, or Mobile Microwave Landing System (MMLS) facility's Standard Service Volume (SSV), that is approved for operational use by Spectrum Engineering, and where a facility meets the applicable flight inspection requirements. An ESV will be validated by flight inspection only when requested by the FAA's Air Traffic Service or procedure specialist and approved by frequency management of the Airway Facilities Division.

d. Nondirectional Beacon (NDB):

(1) Evaluate obstructions or hazards for impact on intended procedures and advise the Procedure Specialist. Evaluate the signal for excessive needle oscillation, weak or garbled ident, and interference as per Paragraph 22.11. Coverage at distances greater than the orbit radius will be certified for specific routes or transitions. The flight inspector must fly intended routes or transitions at the minimum altitudes and maximum distances as depicted in the flight procedure document. For satisfactory performance, the facility must meet the tolerances in FAA Order 8200.1, Chapter 12, Section 1. If the facility does not support the procedure, the flight inspector must determine the minimum altitudes and maximum distances that meet all the tolerances in FAA Order 8200.1, Chapter 12, Section 1 and forward this information to the Procedure Specialist.

(2) Expanded Service Volume (ESV) on commissioned facilities will be established at normal power. At facilities where dual transmitters are installed, evaluate ESV(s) on one transmitter only. ESV(s) must be described by single bearings from the facility with minimum altitudes specified.

(a) Maneuvering. Fly the requested ESV at the minimum specified altitude.

(b) AFIS/ Equipment Setup. If needed to monitor the distance and bearing from the facility, an NDB can be selected on the AFIS. On the FI FAC page, enter the three-letter IDENT, followed by the appropriate type identifier IAW TI 4040.55. For example, the CMH compass locator would be selected by entering CMHO. After the facility is selected, ensure accuracy of the retrieved data by comparing it to the data sheet, make changes, if necessary. The FI NAV page on the pilot's CDU will then display the distance and bearing from the facility for navigation reference. If AFIS is not available, program the FMS or GPS by entering the coordinates from the Facility Data Sheet.

(c) Analysis. Evaluate the signal for out of tolerance needle oscillations, weak or garbled identification, and interference.

(d) Other Considerations. If the bearing is found to be unsatisfactory, evaluate the ESV request to determine if a modified ESV to a shorter distance or higher altitude would be useful and could be approved.

e. Distance Measuring Equipment (DME). Chapter 7, Section 5 provides instructions and performance criteria for certifying standard distance measuring equipment (DME). The flight inspection validation of an ESV for DME can be performed separately but is normally checked in conjunction with the more detailed check of the associated ILS, MLS, VOR, or TACAN facility. When conducting a flight inspection for ESV of DME, independent of an associated facility, check the following:

- Accuracy
- Identification
- Coverage

f. Area Navigation (RNAV)—Procedural Routes Predicated on DME/ DME Position Estimation. This paragraph addresses expanded service volume (ESV) guidance for inspection of RNAV procedures requiring a DME/ DME infrastructure.

Expanded Service Volume (ESV) requirements: Where the DME infrastructure assessment tool (RNAV-PRO) indicates insufficient DME coverage, using standard service volume, the RNAV-PRO can identify proposed ESV(s) for DME facilities that should ensure an acceptable navigational solution.

When ESV documentation is provided in the procedure package, the expected coverage on the ESV form will be compared to the ESV data collected during the flight inspection. The actual facility ESV coverage is presented on the "DME/ DME Leg Summary Report" printed by AFIS at the end of each route inspected. (AFIS Technician User Manual, TI 4040.55, DME/ DME Mode Operations, explains AFIS operation and display.) The Leg Summary Report is the actual facility coverage and should be reported on the ESV request form if it is different from the expected coverage on the ESV form. The ESV request form with noted differences is returned to the FICO after the procedure inspection is completed.

During the inspection, if a Critical, or ESV designated, DME appears not to be transmitting, verify with Air Traffic or a local Flight Service Station that the facility is in service. If a DME designated Critical is off the air, the inspection must be terminated and resumed after the facility is returned to service. When there are three or less DME(s) and one of the three is out of service, the check should be rescheduled.

22.12 EXPANDED SERVICE VOLUME PROCESS

a. FMO-Approved Limits. When a proponent requests an ESV, the FMO ensures the calculated signal level from the desired (D) facility is sufficient and signal levels from any undesired (U) transmissions are low enough to provide a satisfactory D/U ratio throughout the area of use. Usually, these values are predicted to be satisfactory at the requested altitude, azimuth, and distance limits. Flight inspections are required to verify satisfactory signal strength and quality (structure, modulation, etc.). In the event that the signal does not meet flight inspection tolerances at the requested and FMO-approved limit, the ESV must be restricted to the limit of satisfactory coverage.

(1) In some cases, the FMO calculations predict satisfactory signal level and/or frequency protection to some point less than requested. This is indicated on FAA Form 6050-4, Expanded Service Volume Request, by a Part II entry of "Restricted" and definition of the FMO-approved limit. This limit may be due to factors used in the FMO modeling process and not detectable through flight inspection. For example, at the requested distance, the D/U ratio is unsatisfactory, but flight check only sees a clean signal, meeting flight inspection tolerances. We could then erroneously approve an ESV where there is insufficient frequency protection. In this example, the flight inspection should not extend beyond the Part II Restricted distance or lowest altitude.

(2) Occasionally, frequency protection is not a problem, but desirable signal strength is calculated to be marginal. The FMO would note in a Part II remark that they approve of an ESV to a given point less than requested, and defer the final approval contingent on a successful flight check at the requested limit. In this case, the flight inspection should be to the requested distance and at the lowest requested altitude.

(3) It must be understood that **flight inspection does not approve any part of an ESV beyond that which is approved by the FMO.**

b. Clarity of Flight Inspection Results. Some flight inspection comments in Part III of FAA Form 6050-4 have been misleading. As can be seen in Paragraph 22.12a(1), the final flight inspection approval can only be equal to or more restrictive than the FMO-approved limit. If the FMO approves exactly what was originally requested and the signal strength and quality meet flight inspection tolerances to the requested distance and lowest altitude, the flight inspector should check the APPROVED block in Part III. In the Remarks section, **define the limits of the ESV by facility component, azimuth/bearing, distance, and Minimum Reception Altitude (MRA) and Maximum Authorized Altitude (MAA).** Any other situation requires a Part III entry of RESTRICTED and a **definition of the ESV limits**. Facility components, such as VOR and TACAN, which result in different coverage limits, should be defined individually.

c. Expanded Service Volume (ESV) Facilities. When a facility no longer supports an ESV, the facility is not restricted, but a NOTAM must be issued for the instrument flight procedures predicated on that ESV.

CHAPTER 23. RADIO FREQUENCY INTERFERENCE DETECTION

TABLE OF CONTENTS

Paragraph	*Title*	*Pages*
23.10	Introduction	23-1
23.11	Preflight Requirements	23-1
	a. Facility Maintenance Personnel	23-1
	b. Flight Personnel	23-2
23.12	Flight Inspection Procedures	23-2
23.13	Checklist	23-2
23.14	Detailed Procedures	23-2
	a. Airborne Equipment	23-2
	(1) DF Equipment	23-3
	(2) Flight Inspection Receivers	23-3
	(3) Audio Recording	23-3
	(4) Autonomous GPS Recording Capability	23-3
	b. Search Patterns	23-3
	(1) Hot/ Cold	23-3
	(2) GPS Interference	23-3
	(3) Triangulation	23-3
23.15	Analysis	23-4
	a. Intermittent Interference	23-4
	b. Interfering Signal	23-4
23.16	Tolerances	23-4
23.17	Adjustments	23-4
23.18	Records and Reports	23-4

CHAPTER 23. RADIO FREQUENCY INTERFERENCE DETECTION

23.10 Introduction. The radio frequency spectrum, particularly in the VHF communication and navigation bands, is the subject of increasing interference from many sources. This chapter describes the role of flight inspection and presents techniques of flight inspection in the location of Radio Frequency Interference (RFI) to Communications, Navigation, and Surveillance (CNS) systems.

a. Airborne investigation of RFI is usually the last resort and should not be used until all reasonable ground methods are tried. In general, if an interfering signal can be received on the ground, it can be located through ground investigation. In few instances, usually in remote areas, it may be impractical to use any ground methods. If the source of interference is not near a ground receiver, it may only affect the airborne reception and must be located through use of an aircraft. Although the aircraft has pinpointed some RFI sources, it is generally sufficient to narrow the location down to an area small enough to cover with ground equipment. Flight inspection personnel should not participate in ground searches.

b. Types of Interferers. Interference to CNS systems may take several forms, from broadband noise to narrow-band signals. Interference may be constant or intermittent, either predictable or random. Most interference is unintentional, although there have been instances of intentional disruption of air traffic services by individuals or groups for various purposes. Knowing the characteristics of the various types of interference is a key factor in locating their source.

(1) Unintentional interference to CNS systems is usually the result of defective equipment or intermodulation of two or more frequencies. Most cases requiring airborne investigation are due to spurious emissions from defective electric or electronic devices. Many frequencies generated by malfunctioning equipment are not stable and may drift, impacting several victim frequencies.

(2) Intentional interference is usually directed at VHF communications frequencies. Some intentional interference has been disguised as unintentional, but the majority of cases involve voice or music transmitted from a normal VHF transceiver. Some rare cases involve “Phantom Controllers” attempting to misdirect aircraft. As intentional interference to CNS systems is a criminal activity, investigative methods and results should be treated as confidential information to avoid compromising any prosecution of the offenders.

23.11 Preflight Requirements

a. Facility Maintenance Personnel. Tasking for a formal airborne RFI investigation must be initiated by National Operations Control Center (NOCC) through Flight Inspection Central Operations (FICO). Searches for routine, unintentional interference usually require only that the regional Frequency Management Office (FMO) has done a “table top” study of aircraft reports and has determined a likely starting place for the mission. For complex or intentional disruption of service, the NOCC/ FICO/ Regional FMO shall ensure ground and air efforts are coordinated. Such coordination should include non-VHF communications and alternate aircraft call signs as necessary for covert operations.

b. Flight Personnel. Unless both systems are simultaneously accessible by one person, it may be advantageous to have two technicians, one using the spectrum analyzer, and the other using the Direction Finding (DF) equipment. If the signal is difficult to find, consultation or participation of the local or national spectrum managers should be sought, and these phone contacts kept in the aircraft.

23.12 Flight Inspection Procedures. Use the equipment and techniques of Paragraph 23.14 for missions dispatched to search for RFI. Flight inspectors should remain alert to any suspected interference throughout normal flight activities. Any possible interference received must be investigated as thoroughly as possible within the constraints of equipment capabilities and mission limits.

a. If interference is suspected within the Standard or Expanded Service Volume of a facility undergoing flight inspection, attempt to get the facility shut down and verify the presence and characteristics of the interfering signal. If time and circumstances permit, try to identify the source. If it is not readily found, report the findings to the Regional FMO for ground analysis before further airborne attempts.

b. If interference is to a facility or frequency used for normal flight operations, use the applicable techniques from Paragraph 23.14 to analyze the problem. Documenting the signal characteristics at multiple locations along the route of flight will significantly aid the Regional FMO in determining the next step in the process.

23.13 Checklist. There are no specific checklist items for RFI detection and location.

23.14 Detailed Procedures

a. Airborne Equipment

(1) DF Equipment. The DF receiver system produces a strobe indication giving a Line of Bearing (LOB) from the aircraft to the transmission source. Following the strobe will bring the aircraft to the signal source. Usually, the aircraft is too high on the initial pass over the signal source for its identification. A descending 270° turn to pass over the signal from a different direction may aid in its location.

(2) Spectrum Analyzer. Many interfering signals are not on the affected frequency but are within the victim receiver's bandwidth. Tuning the DF receiver to the affected frequency with its bandwidth set too narrow will degrade its effectiveness. Use the spectrum analyzer to find the center frequency and effective bandwidth of any signals that appear close enough to the victim frequency to be the likely interferer.

(3) Flight inspection receivers can be tuned slightly above or below the affected facility frequency to find a peak in signal strength through the flight inspection equipment. This may help find the center frequency of the interference source.

(4) Audio Recording. Flight inspection aircraft should be equipped with audio recorders capable of recording from the various communications or navigational radios as selected by the crew. Record the interference whenever practical to assist FMO personnel in characterizing the signals.

(5) Autonomous GPS recording capability is available in some flight inspection aircraft. It continually monitors the GPS signal for any anomalies and stores up to 24 "events" of unsatisfactory GPS data. The airborne technician should monitor this capability and report any new "Events" to the FICO.

b. Search patterns are usually based either on signal strength or a homing receiver. The signal strength methods are less accurate but may be accomplished with more basic equipment.

(1) Hot/ Cold. This method requires the aircraft to go closer or further from the interferer while the signal strength or best signal to noise ratio (SNR) is noted. If the aircraft travels in a straight line, the peak of the signal should be when the transmitter is directly off the aircraft wing. Another track flown 90° from the first will provide another peak. Sequentially flying a "box pattern" of decreasing size will locate the interference.

(2) GPS Interference. The second method, particularly useful for finding GPS interference requires antennas both on the top and bottom of the aircraft feeding separate sensors. With the bottom antenna fed to a receiver or spectrum analyzer and the top to a GPS receiver, the aircraft is banked to both sides. As the GPS interference will be from the ground, banking the aircraft away from the interferer exposes the bottom sensor antenna to more of the interfering signal, decreasing the SNR. It also shades the top antenna from the ground interference and increases the SNR on that receiver. No significant change while banking either left or right indicates the interference is in front or behind the aircraft. Changes in direction can eventually narrow the search area.

(3) Triangulation. A radiation source can be located by using the DF Receiver to get LOB from two or more locations. Using a geodetic calculator program with an "Intersection" function, the coordinates of the receiver(s) and the lines of bearing (True) are input and the result is the coordinates of the intersection. It is important to use the correct aircraft heading reference (true or magnetic) to correlate with the DF receiver direction reference. The more samples taken with the receiver locations separated by several miles increase the accuracy of the intersection coordinates.

23.15 Analysis

a. Intermittent Interference. Some interference occurs intermittently in either a random or predictable time pattern. Locating these type signals is sometimes very difficult and may take several attempts, with each attempt gathering one or more receiver coordinates and lines of bearing. Each piece of information gathered should be filed together with all data reevaluated as new information is obtained. Assuming the interference source is not physically moving, time has no impact on the data quality. Interfering signals may also move in frequency, i.e., sweep through the victim band. In this case, the bandwidth on the Spectrum Analyzer should be increased. They may also change in modulation, i.e., change in appearance on the spectrum analyzer when the bandwidth is narrow.

b. Analyze the interfering signal as much as possible, using the equipment and techniques in Table 23-1, to provide as much information as possible to the Regional FMO.

Table 23-1

System	Record Audio	Detune Receiver	Spectrum Analyzer	Oscilloscope
VHF/ UHF Comm	X	X	X	
NDB/ ADF	X	X	X	
VOR/ ILS	X	X	X	
TACAN/ DME		X	X	X
MLS		X	X	X
GPS			X	
VHF		X	X	X
DATALINK				

23.16 Tolerances. Tolerances applicable to specific facilities are contained in their individual chapters of FAA Order 8200.1.

23.17 Adjustments. Adjustments to systems to mitigate RFI will be as directed by the applicable system engineer.

23.18 Records and Reports. Complete a flight inspection report for the affected facility, using the form designated for that type facility, IAW FAA Order 8240.36. Reports on intentional interference and the original audio or signal trace recordings of such RFI shall be maintained as evidentiary material for possible use in legal action. Copies of such recordings may be made available to FAA FMO(s) or other applicable Government agencies for their use. Release of other copies shall be in accordance with the Freedom of Information Act (FOIA).

APPENDIX 1. SUPPLEMENTAL INFORMATION

SECTION 1. GLOSSARY

Definitions and Symbols. The use of italics within a definition denotes another definition contained within this section.

Actual Glidepath Alignment or Actual Glidepath Angle. The straight line arithmetic mean of all deviations around the *on-path* position derived in ILS zone 2.

Actual Course (Alignment). The straight line arithmetic mean of all deviations around the *on-course* position derived from the area in which alignment was taken.

Actual Navigation Performance (ANP). Sometimes called Estimated Position Error (EPE) or "Q" factor, is an onboard computation of the estimated 95% Navigation System Error using knowledge of the real world navigation environment, i.e., number of satellites tracked, number/geometry of ground facilities, and statistical error models of the various navigation sources. ANP is continuously compared to RNP, and the crew is alerted if ANP exceeds RNP.

AFIS Corrected Error Trace. A graphical presentation of deviation about the mean of all points measured in ILS Zone 2 for glidepaths and zones 2 and 3 for localizers.

Automatic Gain Control (AGC). A process of electronically regulating the gain in the amplification stages of a receiver so that the output signal tends to remain constant though the incoming signal may vary in strength.

AGC Current or Voltage. A current or voltage responding to the action of the AGC circuit that may be interpreted in terms of signal intensity.

Air Traffic Control Radar Beacon System (ATCRBS). The general term of the ultimate in functional capability afforded by several automation systems. Each differs in functional capabilities and equipment. ARTS IA, ARTS II, ARTS III, and ARTS IIIA (see AIM).

Airway/Federal Airway. A control area or portion thereof established in the form of a corridor, the centerline of which is defined by navigational aids (refer to FAR Part 71, AIM).

Alignment. Coincidence of a positional or directional element with its nominal reference.

Alignment, Azimuth. The azimuth or actual magnetic bearing of a course.

Alignment, Elevation. The actual angle above a horizontal plan originating at a specific point of a course used for altitude guidance.

Alignment Error. The angular or linear displacement of a positional or directional element from its normal reference.

Alignment Error, Azimuth. The difference in degrees between the position of a selected course and the correct magnetic azimuth for this course.

> **Note:** The error is positive when the course is clockwise from the correct azimuth.

Alignment Error, Elevation. The difference in degrees between the measured angle of the course and the correct angle for the course.

Note: The error is positive when the course is above the correct angle.

ALTITUDES:

a. Absolute Altitude. The altitude of the aircraft above the surface it is flying (AC 00-6A). It may be read on a radio/radar altimeter.

b. Calibrated Altitude. Indicated altitude corrected for static pressure error, installation error, and instrument error.

c. Indicated Altitude. The altitude as shown by an altimeter on a pressure or barometric altimeter. It is altitude as shown uncorrected for instrument error and uncompensated for variation from standard atmospheric conditions (AIM).

d. Pressure Altitude. Altitude read on the altimeter when the instrument is adjusted to indicate height above the standard datum plane (29.92" Hg.)(AC 61-27 latest revision).

e. True Altitude. The calibrated altitude corrected for nonstandard atmospheric conditions. It is the actual height above mean sea level .

Ampere. A unit of electric current such as would be given with an electromotive force of one volt through a wire having a resistance of one OHM. See Symbols. See Crosspointer.

Amplitude (Peak). The maximum instantaneous value of a varying voltage or current measured as either a positive or negative value.

Anomalous Propagation. Weather phenomena resulting in a layer in the atmosphere capable of reflecting or refracting electromagnetic waves either toward or away from the surface of the earth.

Angle Voltage. The alignment points of the azimuth and elevation electronic cursors are expressed in angle voltage or dial divisions.

Antenna. A device used to radiate or receive electromagnetic signals.

Antenna Reflector. That portion of a directional array, frequently indirectly excited, which reduces the field intensity behind the array and increases it in the forward direction.

Approach Azimuth. Equipment which provides lateral guidance to aircraft in the approach and runway regions. This equipment may radiate the Approach Azimuth function or the High Rate Approach Azimuth function along with appropriate basic and auxiliary data.

Approach Elevation. The equipment which provides vertical guidance in the approach region. This equipment radiates the Approach Elevation function.

Approach Reference Datum (ARD). A point at a specified height located vertically above the intersection of the runway centerline and the threshold.

Approach with Vertical Guidance (APV). RNAV procedures with vertical guidance are termed "APV" (approach with Vertical Guidance). APV is a classification of approach capability between Non-Precision and Precision. APV landing minimums are based on the performance criteria and technology related to the Navigation System Error (NSE), Flight Technical Error, and Total System Error (TSE).

Different APV approaches, based on different technologies, are defined in the following table:

Name	Lateral Performance	Vertical Performance
RNAV (DME/ DME) with BARO-VNAV	Based on DME/ DME No NSE defined, TSE: 0.3 nm	Based on Barometer No NSE defined, FTE: Equivalent to Non Precision Approach (75 m/ 246 ft)
RNAV (GNSS) With BARO-VNAV	Based on GNSS NSE: 220 m (95%) TSE: 0.3 nm	Based on Barometer No NSE defined, FTE: Equivalent to Non Precision Approach (75 m/ 246 ft)
RNP with BARO-VNAV	Varied (depends on RNP)	Based on Barometer No NSE defined, FTE: Equivalent to Non Precision Approach (75 m/ 246 ft)
Operation using APV-I performance	Based on GNSS Equivalent to Localizer NSE and FTE	Based on GNSS NSE: 20m (95%) 50 m (limit)
Operation using APV-II performance	Based on GNSS Equivalent to Localizer NSE and FTE	Based on GNSS NSE: 8m (95%) 20m (limit) FTE: Equivalent to FTE on ILS glide slope

Area Navigation (RNAV). A method of navigation that permits aircraft operations on any desired course within the coverage of station referenced navigation signals or within the limits of self-contained system capability (AIM).

Area VOT. A facility designed for use on the ground or in the air. It may be located to provide the test signal to one or more airports.

ARINC Specification 424. ARINC Specification 424 is a standard by which a navigation database is created to interface with an airborne navigation computer (i.e., FMS, GPS receiver, etc.) The navigation database will provide paths and termination points for the navigation computer to follow. ARINC 424 defines 23 leg path and terminators. A limited number of the leg types can be used to define RNAV procedures. The leg types used to define RNP RNAV procedures are further limited in order to provide repeatable aircraft ground tracks.

Attenuation. The reduction in the strength of a signal, expressed in decibels (dB).

Average Course Signal. The course determined by drawing the mean of the maximum course deviations due to roughness and scalloping.

Azimuth. A direction at a reference point expressed as the angle in the horizontal plane between a reference line and the line joining the reference point to another point, usually measured clockwise from the reference line.

Auxiliary Data. Data, transmitted in addition to basic data, that provide facilities maintenance equipment siting information for use in refining airborne position calculations and other supplementary information.

Barometric Vertical Navigation (BARO VNAV). A navigation system which presents computed vertical guidance to the pilot. The computer-resolved Glidepath Angle (GPA) is based on barometric altitude, and is either computed as a geometric angle between two waypoints, or an angle from a single waypoint.

Baseline Extension (Loran-C). The extension of the baseline beyond the master or secondary station. Navigation in this region may be inaccurate due to geometrical considerations resulting in ambiguous position solutions.

Basic Data. Data transmitted by the facilities maintenance equipment that are associated directly with the operation of the landing guidance system.

Bearing. The horizontal direction to or from any point usually measured clockwise from true north or some other reference point (see Non-Directional Beacon)(AIM).

Bends. Slow excursions of the course.

Bits per second (BPS). Refers to digital data transfer rate, usually by modem or direct cable.

Black Hole. An area in the vicinity of an airport, which visually appears void of features normally used by the pilot for situational awareness. This term is normally associated with nighttime operations.

Blind Speed. The rate of departure or closing of a target relative to the radar antenna at which cancellation of the primary target by MTI circuits in the radar equipment causes a reduction or complete loss of signal (AIM).

Blind Zones (Blind Spots). Areas from which radio transmissions and/or radar echoes cannot be received.

Broadband. Nonautomated signal processing.

Capture Effect. A system in which coverage is achieved by the use of two independent radiation field patterns spaced on separate carrier frequencies.

Change/ Reversal in Slope of the Glidepath. A long term (1,500 ft or more) change in the direction of the *on-path* position as determined by the graphic averaging of the short term (roughness, high frequency scalloping) deviations as represented by the differential/corrected error trace.

Checkpoint. A geographical point on the surface of the earth whose location can be determined by reference to a map or chart.

Circular Polarization (CP). An electromagnetic wave for which the electronic and/or the magnetic field vector at a point describes a circle.

Note: Circular Polarization reduces or eliminates echoes from precipitation.

Clearance. The preponderance of the modulation signal appropriate to the area on one side of the reference line or point to which the receiver is positioned, over the modulation signal appropriate to the area on the other side of the reference line.

Clearance Guidance Sector. The volume of airspace, inside the coverage sector, within which the azimuth guidance information provided is not proportional to the angular displacement of the aircraft but is a constant fly-left or fly-right indication of the direction relative to the approach course the aircraft should proceed in order to enter the proportional guidance sector.

Close-in Courses. That portion of a course or radial which lies within 10 miles of the station.

Code Train. A series of pulses of similar characteristics and specific spacing. Applicable to the group of pulses transmitted by a transponder each time it replies to an interrogator.

Comma-Separated Values (CSV) file. In computers, a CSV file contains the values in a table as a series of ASCII text lines organized so that each column value is separated by a comma from the next column's value and each row starts a new line. A CSV file is a way to collect the data from any table so that it can be conveyed as input to another table-oriented application.

Common Digitizer Data Reduction Program (CD). A computer data recording of raw narrowband radar data (minimal filtering ability is provided).

Cone of Ambiguity. Airspace over a VOR or TACAN station, conical in shape, in which the To/From ambiguity indicator is changing positions.

Constant False Alarm Rate (CFAR). PAR electronic circuitry which allows search video clutter reduction on the radar display presentation.

Control Electronic Unit (CEU). Mobile MLS computer transmitter and monitoring system.

Control Motion Noise (CMN). Those fluctuations in the guidance which affect aircraft attitude, control surface, column motion, and wheel motion during coupled flight but do not cause aircraft displacement from the desired course or glidepath.

Cooperating Aircraft. Aircraft which cooperate by flying courses required to fulfill specific portions of the flight inspection and which meet the requirements for a small aircraft.

Cosecant-Squared Beam. A radar beam pattern designed to give approximately uniform signal intensity for echoes received from distant and nearby objects. The beam intensity varies as the square of the cosecant of the elevation angle.

Course Coincidence. The measured divergence of the designated radials of two adjacent facilities in the airway structure. (ICAO Document 8071).

Course Displacement. The difference between the actual course alignment and the correct course alignment. (ICAO Document 8071).

Course Error. The difference between the course as determined by the navigational equipment and the actual measured course to the facility. This error is computed as a plus or minus value, using the actual measured course to the facility as a reference.

Course Line Computer. Airborne equipment which accepts bearing and distance information from receivers in an aircraft, processes it, and presents navigational information enabling flight on courses other than directly to or from the ground navigation aid being used. (Used in Area Navigation--RNAV.)

Course Roughness. Rapid irregular excursions of the course usually caused by irregular terrain, obstructions, trees, power lines, etc.

Course Scalloping. Rhythmic excursions of the electromagnetic course or path.

Course Width (Course Sensitivity). The angular deviation required to produce a full-scale course deviation indication of the airborne navigation instrument.

Coverage. The designated volume of airspace within which a signal-in-space of specified characteristics is to be radiated.

Critical DME. For RNAV operations, a DME facility that, when unavailable, results in navigation service which is insufficient for DME/ DME/IRU supported operations along a specific route or procedure. The required performance assumes an aircraft's RNAV system meets the minimum standard (baseline) for DME/ DME RNAV systems or the minimum standard for DME/ DME/IRU systems found in Advisory Circular 90-100x, U.S. Terminal and En route Area Navigation (RNAV) Operations. For example, terminal RNAV DP(s) and STAR(s) may be published with only two DME(s), in which case, both are critical.

Crosspointer (Deflection Indicator Current (ICAO)). An output current proportional to: ILS-- Difference in depth of modulation measured in microamperes. VOR/VORTAC/TAC -- The difference in phase of two transmitted signals measured in degrees of two audio navigation components for a given displacement from a navigation aid.

Cycle Skip. The receiver uses the incorrect cycle of the 100 kHz carrier of the Loran-C signal, for time measurements. Normally the third cycle of a given carrier pulse is used for time measurements. Each cycle skip will result in a 10-microsecond error in time measurement and a corresponding error in navigation.

Cyclic Redundancy Check (CRC). The CRC is an error detection algorithm capable of detecting changes in a block of data. Navigation databases require high integrity of the data. The CRC performs a mathematical calculation of the navigation data and returns a number that uniquely identifies the content and organization of the data. The actual number that is used to identify the data is called a checksum or CRC remainder code. CRC values are stored and transmitted with their corresponding data. By comparing the CRC code of a WAAS RNAV FAS data block to the FAA Fpr, 8260-10 procedural data CRC code, determination can bbe made if FAS data has been corrupted.

Dedicated TRIAD. Three specific Loran-C stations from one CHAIN. Dedicated TRIAD selection is utilized to ensure that receiver positioning is determined only by these stations.

Designed Procedural Azimuth. The azimuth determined by the procedure specialist that defines the desired position of a course or bearing.

F Course (Steer). The indicated magnetic direction of an aircraft to the DF station and the direction the aircraft must steer to reach the station.

DF Fix. The geographical location of an aircraft obtained by the direction finder.

Difference in Depth of Modulation (DDM). The percentage modulation of the larger signal minus the percentage modulation of the smaller signal.

Dilution of Precision (DOP). (HDOP - horizontal, VDOP - vertical, PDOP - position, i.e., the combination of horizontal and vertical) Dilution of precision is the mathematical representation of the quality of GPS satellite geometries. The number and location of the visible satellites control DOP. A value of 1.0 would be optimum satellite constellation and high quality data (1.5 or less is normal). A value of 8.0 would be poor constellation and data.

Discrepancy. Any facility operating parameter which is not within the given tolerance values (prescribed in the U.S. Standard Flight Inspection Manual) as determined by flight inspection measurements.

Displaced Threshold. A threshold located on the runway at a point other than the designated beginning of the runway (AIM).

Distance Measuring Equipment (DME). Electronic equipment used to measure, in nautical miles, the slant range of the aircraft from the navigation aid. (AIM)

Distance Measuring Equipment/Precision (DME/ P). The range function associated with the MLS. It is a precision distance measuring equipment providing accurate range (20 to 40 ft at a 2-sigma probability).

DME Electronic Unit (DEU). Mobile MLS transmitter and monitoring system.

Doppler VOR (DVOR). VOR using the Doppler frequency shift principle.

Dual-Frequency Glidepath System. An ILS glidepath in which coverage is achieved by the use of two independent radiation field patterns spaced on separate carrier frequencies within the particular glidepath channel, e.g., Capture Effect Glidepath.

Dual-Frequency Localizer System. A localizer system in which coverage is achieved by the use of two independent radiation frequencies within the particular localizer VHF channel.

Ellipsoid (WGS-84). WGS-84 ellipsoid is used by DoD for mapping, charting, surveying, and navigation needs, including its GPS “broadcast” and “precise” orbits. The absolute positions that are obtained directly from GPS are based on the 3D, earth-centered WGS-84 ellipsoid.

Ellipsoid Height. Ellipsoid height is the vertical distance of a point above the WGS-84 ellipsoid.

Envelope to Cycle Discrepancy (ECD). The discrepancy between the desired and actual zero phase crossing at the end of the third cycle of the Loran-C 100 kHz carrier pulse.

Essential Data. Essential data words are Basic Data Words 1, 2, 3, 4, and 6; and Auxiliary Data Words A1, A2, and A3.

Expanded Service Volume (ESV). (See Service Volume.)

Fault Detection & Exclusion (FDE). If six or more space vehicles (SV(s)) are received, the GPS avionics will determine any errors, which SV is providing faulty data, and exclude it. FDE is required for remote/ oceanic operations.

Feed Horn. Radar antenna focal point. Also reference point in antenna elevation measurements.

Fictitious Threshold Point (FTP). The FTP is the equivalent of the landing threshold point (LTP) when the final approach course is offset from runway centerline. It is defined as the intersection of the final course and a line perpendicular to the final course that passes throught the LTP. FTP elevation is the same as the LTP. For the purposes of this document, where LTP is used, FTP may apply as appropriate.

Figure of Merit (FOM). Horizontal and Vertical FOM are the current assessment of the 95% accuracy of the reported position in these dimensions for WAAS.

Final Approach Segment. This is the segment in which alignment and descent for landing are accomplished. The final approach segment considered for obstacle clearance begins at the final approach fix or point and ends at the runway or missed approach point, whichever is encountered last. A visual portion within the final approach segment may be included.

Final Approach Segment (FAS) Data Block. The FAS Data Block contains data for a single operation. It is self-contained and utilizes a cyclic redundancy check (CRC) to preserve integrity. The FAS Data Block contains the parameters that define a single straight-in **precision** approach. Parameters include: airport ID, approach performance designator, course width at threshold, CRC code, flight path alignment point lat/ long, glide path angle, landing threshold point height above ellipsoid, landing threshold lat/ long, length offset, operation type, route indicator, runway letter, runway number, SBAS provider, threshold crossing height, and threshold corssing height units selector.

Fixed Map. A background map on the radar display produced by one of the following methods:

(1) Engraved marks on an overlay illuminated by edge lighting

(2) Engraved fluorescent marks on an overlay illuminated by means of ultraviolet light.

(3) Projected on the display by means of film and a projector mounted above and in front of the scope.

(4) Electronically mixed into the display as generated by a "mapper" unit

Flag (Flag Alarm). A warning device in certain airborne navigation equipment and flight instruments indicating: (1) instruments are inoperative or otherwise not operating satisfactorily, or (2) signal strength or quality of the received signal falls below acceptable values. (AIM)

Flag Alarm Current. The d.c. current flowing in the Flag Alarm Circuit, usually measured in microamperes, which indicates certain characteristics of the modulation of the received signal.

Flight Inspection (Flight Check). Inflight investigation and evaluation of air navigation aids and instrument flight procedures to ascertain or verify that they meet established tolerances and provide safe operations for intended use.

> **Note:** *Flight checked* describes the procedure to accomplish the function of flight inspection. The two terms are interchangeable.

Flight Inspector. Flight crewmember certified by FAA's Aviation System Standards (AVN) to perform flight inspection.

Flight Inspection Standard Service Volume (FISSV) (see Service Volume).

Flight Path Alignment Point (FPAP). The FPAP is a 3D point defined by World Geodetic System (WGS)-84/ North American Datum (NAD)-83 latitude, longitude, MSL elevation, and WGS-84 Geoid height. The FPAP is used in confunction with the LTP and the geometric center of the WGS-84 ellipsoid to define the vertical plane of a precision RNAV final approach course. The course may be offset up to 3° by establishing the FPAP left or right of centerline along an arc centered on the LTP.

Flight Path Control Poing (FPCP). The FPCP is a 3D point defined by the LTP or FTP latitude/ longitude position, MSL elevation, and a threshold crossing height (TCH) value. The FPCP is in the vertical plane of the final approach course and is used to relate the glidepath angle of the final approach track to the landing runway. It is sometimes referred to as the TCH point or reference datum point (RDP).

Fly-By Waypoint. A waypoint that requires the use of turn anticipation to avoid overshoot of the next flight segment.

Fly-Over Waypoint. A waypoint that precludes any turn until the waypoint is overflown.

Geoid. The geoid is a gravitational equi-potential surface. The geoid is referenced to equate to the mean sea surface shaped by density distributions in the earth's crust. The density distributions in the earth's crust cause variations in gravitational pull; therefore, causing an irregular surface.

Geodial Height. Geoidal height is how far the geoid is above or below the **WGS-84 ellipsoid.**

Geometric Dilution of Precision (GDOP). A factor used to express navigational error at a position fix caused by divergence of the hyperbolic lines of position as the aircraft's receiver distance from the baseline increases. The larger the GDOP, the larger the standard deviation of position errors.

Geostationary Earth Orbit Satellite (GEO). A GEO is a communications satellite (positioned about 22,000 miles above the earth along the equator). WAAS GEO(s) transmit a corrected GPS ranging signal on L1. GEO PRN #122 is Atlantic Ocean Region – West (AOR-W), PRN #121 is Atlantic Ocean Region – East (AOR-E), and PRN #134 is Pacific Ocean Region (POR).

Geostationary Satellite. Geostationary is a satellite, which appears to remain perfectly stationary in the sky as seen from earth. In order for this to happen, its orbital period must perfectly match the earth's 23 hour 56 minute day. As an added qualifier, it must also be exactly above the equator (inclination of 0). To keep a satellite perfectly geostationary for a long amount of time would require too much fuel (in compensation for the gravity fields of other non-stationary bodies, the sun and moon); therefore, most satellites are geosynchronous, which allows for some deviation.

Glidepath. See: ILS Glidepath.

Glidepath Angle. The angle between the downward extended straight line extension of the ILS glidepath and the horizontal.

Glidepath Structure. Characteristics of a glidepath including bends, scalloping, roughness, and width.

Glide Slope. A facility which provides vertical guidance for aircraft during approach and landing.

Glide Slope Intercept Altitude. The true altitude (MSL) proposed or published in approved let-down procedures at which the aircraft intercepts the glidepath and begins descent.

Graphical Average Path. The average path described by a line drawn through the mean of all crosspointer deviations. This will usually be a curved line which follows long-term trends (1,500 ft or greater) and averages shorter term deviations.

Ground-Based Autmentation System (GBAS). ICAO term (e.g., LASS, SCAT 1).

Ground Point of Intercept (GPI). A point in the vertical plan on the runway centerline at which it is assumed that the *downward straight line extension* of the glide path intercepts the runway approach surface baseline. (FAA Order 8260.3 latest revision)

Group Repetition Interval (GRI). The time interval (microseconds divided by 10) between one group of 100 kHz carrier pulses and the next, from any transmitter within a Loran-C CHAIN. All stations in a specific CHAIN use the same GRI.

Hertz (Hz). A unit of frequency of electromagnetic waves which is equivalent to one cycle per second. See Symbols in this chapter.

Kilohertz (kHz). A frequency of 1000 cycles per second.

Megahertz (MHz). A frequency of one million cycles per second.

Gigahertz (GHz). A frequency of one billion cycles per second.

HLOM. An H Class of NDB facility installed as a compass locator at the outer marker. The standard service volume extends to 50 nm.

Hole (Null). An area of signal strength below that required to perform the necessary function or furnish the required information, which is completely surrounded by stronger signal areas of sufficient strength to perform required functions.

Horizontal Alert Limit (HAL). The radius of a circle, with its center being at the true aircraft position, which describes the region required to contain the indicated horizontal position with a probability of $1\text{-}10^{-7}$ per flight hour.

Horizontal Integrity Limit (HIL). The radius of a circle in the horizontal plane, with its center being at the indicated position, which describes the region which is assured to contain the true position. It is the horizontal region for which the missed alert and false alert requirements can be met. It is only a function of the satellite and user geometry and the expected error characteristics; it is not affected by actual measurements. Therefore, this value is predictable.

Horizontal/ Vertical Protection Level (HPL/ VPL). WAAS integrity (uncertainty) associated with the 3-dimensional position accuracy that is output by the receiver. The number of satellites, geometry of satellites, tropospheric delay, and airborne receiver accuracy affect these levels. HPL/ VPL are compared to the HAL/ VAL. If exceeds the associated alert limit, the receiver will flag either part or all of the approach.

ILS--Back-Course Sector. The *course sector* which is the appropriate reciprocal of the front *course sector.*

ILS--Commissioned Angle--Glide Slope. The glidepath angle calculated by a qualified procedure specialist which meets obstruction criteria (FAA Order 8260.3 latest revision). This nominal angle may be increased to meet additional criteria, i.e., engineering, noise abatement, site deficiencies, etc.

ILS--Commissioned Width--Localizer. The nominal width of a localizer. In practice the width is computed by using the criteria prescribed in Section 217 of FAA Order 8200.1 (latest revision).

ILS--Course Sector. A sector in a horizontal plane containing the course line and limited by the loci of points nearest to the course line at which 150uA is found.

ILS--Differential Corrected Trace. The trace on the recording which is the algebraic sum of the Radio Telemetering Theodolite (RTT) crosspointer (DDM) and the aircraft receiver crosspointer (DDM) and which is produced by the differential amplifier within the airborne Theodolite Recording System.

ILS--Downward Straight Line Extension. The mean location of the ILS Glidepath in zone 2.

ILS--Facility Reliability. The probability that an ILS ground installation radiates signals within the specified tolerances.

ILS--Front Course Sector. The course sector which is situated on the same side of the localizer as the runway.

ILS--Glidepath. The locus of points in the vertical plane (containing the runway centerline) at which the DDM is zero, which of all such loci is the closest to the horizontal plane.

> **Note:** Offset ILS(s) do not contain the runway centerline.

ILS--Glidepath Sector. The sector in the vertical plane containing the ILS glidepath at which 150uA occurs.

> **Note:** The ILS glidepath sector is located in the vertical plane containing the localizer *on-course* signal and is divided by the radiated glidepath called upper sector and lower sector, referring respectively to the sectors above and below the path.

ILS--Glidepath Sector Width (Normal Approach Envelope). The width of a sector in the vertical plane containing the glidepath and limited by the loci of points above and below the path at which reading of 150uA is obtained.

ILS—Glidepath Rate of Change. A change in the trend, or direction, of the glidepath.

ILS—Glidepath Reversal. A glidepath rate of change that meets or exceeds 25 μA at the divergence measurement point.

ILS—Half ILS Glidepath Sector. The sector in the vertical plane containing the ILS glidepath and limited by loci of points nearest to the glidepath at which 75 μA occurs.

ILS--Half Course Sector. The sector, in a horizontal plane containing the course line and limited by the loci of points nearest the course line at which 75μA occurs.

ILS--Localizer Back Course Zone 1. The distance from the coverage limit to 4 miles from the localizer antenna.

ILS--Localizer Back Course Zone 2. From 4 miles from the localizer antenna to 1 mile from the localizer antenna.

ILS--Localizer Back Course Zone 3. One mile from the localizer antenna to the missed approach point, which may be as close as 3,000 ft from the localizer antenna.

ILS--Localizer Clearance Sector 1. From 0° to 10° each side of the center of the localizer *on-course.*

ILS--Localizer Clearance Sector 2. From 10° to 35° each side of the center of the localizer *on-course*.

ILS--Localizer Clearance Sector 3. From 35° to 90° each side of the center of the localizer *on-course*.

ILS--Localizer Course Sector Width. The sum of the angular distances either side of the center of the course required to achieve full scale (150μA) crosspointer deflection.

ILS—Lower Standard Altitude (LSA). That altitude which is 1,500 ft above the localizer antenna or 500 ft above intervening terrain, whichever is higher.

ILS--Performance Category I. An ILS which provides acceptable guidance information from the coverage limits of the ILS to the point at which the localizer course line intersects the glidepath at a height of 100 ft or less above the horizontal plane containing the runway threshold.

ILS--Performance Category II. An ILS which provides acceptable guidance information from the coverage limits of the ILS to the point at which the localizer course line intersects the glidepath at a point above the runway threshold.

ILS--Performance Category III. An ILS, which, with the aid of ancillary equipment where necessary, provides guidance information from the coverage limit of the facility to, and along, the surface of the runway.

ILS--Point "A". An imaginary point on the glidepath/localizer *on-course* measured along the runway centerline extended, in the approach direction, 4 nautical miles from the runway threshold.

> **NOTE:** For back Course and installations sited to project a course substantially forward of threshold as in Figure 217-1B(2), this point is 4 nm from the antenna.

ILS--Point "B". An imaginary point on the glidepath/localizer *on-course* measured along the runway centerline extended, in the approach direction, 3,500 ft from the runway *threshold.*

> **NOTE:** For back course as in Figure 217-1B(3), this point is 1 nm from the antenna. For installations sited to project a course substantially forward of threshold as in Figure 217-1B(2), this point is 1 nm from the threshold.

ILS--Point "C". A point through which the *downward extended straight portion* of the glidepath (at the commissioned angle) passes at a height of 100 ft above the horizontal plane containing the *runway threshold*.

> **Note:** Localizer only, Back Course, LDA's and SDF only facilities, Point C is the missed approach point and may not necessarily be the runway threshold.

ILS Point "D". A point 12 ft above the runway centerline and 3,000 ft from the runway threshold in the direction of the localizer.

ILS Point "E". A point 12 ft above the runway centerline and 2,000 ft from the stop end of the runway in the direction of the *runway threshold*.

ILS Point "T". A point at specified height located vertically above the intersection of the runway centerline and the *runway threshold* through which the *downward extended straight line* portion of the ILS glidepath passes.

ILS Reference Datum. Same as ILS Point "T".

ILS--Zone 1. The distance from the coverage limit of the localizer/glidepath to Point "A" (four miles from the *runway threshold).*

ILS--Zone 2. The distance from Point "A" to Point "B"

ILS--Zone 3. CAT I - The distance from Point "B" to Point "C" for evaluations of Category I ILS.
CAT II and III - The distance from Point "B" to the *runway threshold* for evaluations of Category II and III facilities.

> **Note:** Localizer Only, Back Course, LDA, and SDF facilities will have no Zone 3 if Point "C" occurs prior to Point "B." Structure tolerance remains defined by Points "A" to "B."

ILS--Zone 4. The distance from runway threshold to Point "D".

ILS--Zone 5. The distance from Point "D" to Point "E".

Initial Approach Segment. In the initial approach, the aircraft has departed the en route phase of flight, and is maneuvering to enter an intermediate segment. This is the segment between the initial approach fix/waypoint and the intermediate fix/waypoint or the point where the aircraft is established on the intermediate course or final approach course.

Integrity (WAAS). The integrity of a system is that quality, which relates to the trust, which can be placed in the correctness of the information, supplied by the total system. Integrity risk is the probability of an undetected (latent) failure of the specified accuracy. Integrity includes the ability of the system to provide timely warnings to the user when the system should not be used for the intended operation. The WAAS sensor displays integrity in the form of Horizontal/ Vertical Protection Level.

Intermediate Approach Segment. This is the segment which blends the initial approach segment into the final approach segment. It is the segment in which aircraft configuration, speed, and positioning adjustments are made for entry into the final approach segment. The intermediate segment begins at the intermediate fix (IF) or point, and ends at the final approach fix (FAF).

In-Phase. Applied to the condition that exists when two signals of the same frequency pass through their maximum and minimum values of like polarity at the same time.

Integrity. That quality which relates to the trust which can be placed in the correctness of the information supplied by the facility.

Integrators. Received target enhancement process used in primary radar receivers.

Interrogator. The ground-based surveillance radar transmitter-receiver which normally scans in synchronism with a primary radar, transmitting discrete radio signals which repetitiously request all transponders, on the mode being used, to reply. The replies are displayed on the radar scope. Also applied to the airborne element of the TACAN/DME system. (AIM)

Investigator-in-Charge (IIC). Person responsible for on-site aircraft investigation procedure.

Ionosphere. A band of charged particles 80 – 120 nm above the earth, which represent a non-homogeneous and dispersive medium for radio signals. Signal phase delay depends on the electron content and affects carrier content. Group delay depends on dispersion in the ionosphere and affects signal modulation. Propagation speed (refraction) is changed as it passes through the ionosphere. SBAS and GBAS systems are designed to mitigate much of the error induced into GNSS signal as it passes through the ionosphere.

Joint Acceptance Inspection (JAI). Inspection at culmination of facility installation and preparation. System is technically ready for commissioning after successful JAI.

Joint Use. For this document, refer to radar sites used by both the FAA and military.

L1/ L2/ L5 Satellite Frequency. L1 (1575.42 MHz), L2 (1227.60 MHz), L5 (1176.45 MHz).

Landing Threshold Point (LTP). The LTP is a 3D point at the intersection of the runway centerline and the runway threshold. WGS-84/ NAD-83 latitude, longitude, MSL elevation, and Geoid height define it. It is used in conjunction with the FPAP and the geometric center of the WGS-84 ellipsoid to define the vertical plane of an RNAV final approach course. LTP elevation (LTPE) applies to the LTP and FTP when the final approach course is offset from runway centerline. For the purposes of this document, where LTP is used, FTP may apply as appropriate.

Line-of-Position (LOP). LOP is a hyperbolically curved line defined by successive but constant time difference measurements using the signals from two Loran-C transmitters. Two LOP's from two station pairs define the location of a receiver and establish a position fix.

Local Area Augmentation System (LAAS). LAAS is an augmentation to GPS that focuses its service on the airport area (approximately a 20 – 30 mile radius). It broadcasts its correction message via a very high frequency (VHF) radio data link from a ground-based transmitter. LAAS will yield the extremely high accuracy, availability, and integrity necessary for Category I, II, and III precision approaches, and will provide the ability for more flexible, curved approach paths. LAAS demonstrated accuracy is less than 1 meter in both the horizontal and vertical axis.

Local Area Monitor (LAM). A stationary receiver designed to monitor and record Loran-C signals and time difference (TD) data. TD information obtained by this unit is used for calculating receiver TD calibration values.

Localizer Type Directional Aid (LDA). A facility of comparable utility and accuracy to a LOC, but which is not part of a full ILS and may not be aligned with the runway. (FAA Order 8260.3, latest revision)

Localizer (LOC). The component of an ILS which provides lateral guidance with respect to the runway centerline. (FAA Order 8260.3, latest revision).

Localizer Zones. See ILS-Zones or ILS-Localizer Back Course Zones

Lock-On. The condition during which usable signals are being received by the airborne equipment and presentation of steady azimuth and/or distance information starts.

Loran-C CHAIN. Loran-C stations are grouped into sets of stations called CHAINs. Each CHAIN consists of a master station and two or more secondary stations that repeat transmissions over a specific period of time (see GRI).

Loran Signal Evaluation System (LSES). The LSES is a Loran-C receiver and a time difference data device used to evaluate approach sites. The device determines if usable signals are present and establishes the time difference relationship with the local area monitor.

Loran-C Time Difference (TD). The elapsed time, in microseconds, between the arrival of two signals.

Lower Standard Altitude (LSA). See ILS Lower Standard Altitude (LSA).

Localizer Precision with Vertical guidance (LPV). FAA Order 8260.54 specifies criteria for RNAV WAAS approach procedures. Approaches constructed under these criteria are termed "LPV". The lateral protection area is based on the precision approach trapezoid dimentions and the vertical surfaces are constructed aroud WAAS vertical performance. Ther lateral criterion is based on the WAAS Horizontal Alarm Limit (HAL) being ≤40 meters. Ther vertical criterion is based on the WAAS Vertical Alarm Limit (VAL) being >12 meters and ≤50 meters. RNAV WAAS LPV procedures can be supported to HAT of ≥200'. In comparison, CAT I approach procedures require the same lateral containment, but require ≤11 meters vertical containment. LPV approach performance level is between that defined for APV I and APV II. An RNAV approach procedure with published line minima titled "LPV", will require a WAAS sensor to fly to those minima.

MLOM. An MH Class NDB facility installed as a compass locator at the outer marker. The standard service volume extends to 25 nm.

Mask Angle Elevation. A fixed elevation angle referenced to the user's horizon below which satellites are ignored by the receiver software. Mask angles are used primarily in the analysis of GNSS performance, and are employed in some receiver designs. The mask angle is driven by the receiver antenna characteristics, the strength of the transmitted signal at low elevations, receiver sensitivity, and acceptable low elevation errors.

Maximum Authorized Altitude (MAA). A published altitude representing the maximum usable altitude or flight level for an airspace structure or route segment. It is the highest altitude on a Federal airway, Jet route, area navigation low or high route, or other direct route for which an MEA is designated in FAR Part 95, at which adequate reception of navigation and signals is assured.

Maximum Error. The maximum amplitude of course alignment from zero, either in the clockwise or counterclockwise direction.

Mean Course Error (MCE). The mean value of azimuth or elevation error along the approach course or specified glidepath.

Microampere(s). (Microamps)--One millionth of an ampere (amp). In practice, seen on a pilot's omnibearing selector (OBS), oscillograph recordings, and/or flight inspection meters, as a deviation of the aircraft's position in relation to a localizer on-course (zero DDM) signal or glidepath on-path (zero DDM) signal, e.g., "5 microamperes (μA) right" (localizer); "75μA low" (glidepath). See Crosspointer and Symbols in this section.

Microwave Landing System (MLS). The international standard microwave landing system.

Milliampere (mA). One one-thousandth of an ampere.

Minimum Crossing Altitude (MCA). The lowest altitude at certain fixes at which an aircraft must cross when proceeding in the direction of a higher minimum en route IFR altitude (MEA). (AIM)(See Minimum En Route IFR Altitude).

Minimum Descent Altitude (MDA). The lowest altitude, expressed in feet above mean sea level, to which descent is authorized on final approach or during circle-to-land maneuvering in execution of a standard instrument approach procedure where no electronic glidepath is provided. (AIM)

Minimum En Route IFR Altitude (MEA). The lowest published altitude between radio fixes which assures acceptable navigational signal coverage and meets obstacle clearance requirements between those fixes. The MEA prescribed for a Federal airway or segment thereof, area navigational low or high route, or other direct route applies to the entire width of the airway, segment, or route between the radio fixes defining the airway, segment, or route. (AIM) (FAR Parts 91 and 95).

Minimum Glide Path (MGP). The lowest angle of descent along the zero degree azimuth that is consistent with published approach procedures and obstacle clearance criteria.

Minimum Holding Altitude (MHA). The lowest altitude prescribed for a holding pattern which assures navigational signal coverage, communications, and meets obstacle clearance requirements. (AIM)

Minimum Obstruction Clearance Altitude (MOCA). The lowest published altitude in effect between radio fixes on VOR airways, off-airway routes, or route segments which meets obstacle clearance requirements for the entire route segment and which assures acceptable navigation signal coverage only within 25 statute miles (22nm) of a VOR. (AIM) (Refer to FAR Parts 91 and 95)

Minimum Radar Range. The shortest distance from the radar at which the aircraft can be clearly identified on each scan of the radar antenna system.

Minimum Reception Altitude (MRA). The lowest altitude at which an intersection can be determined. (AIM) (Refer to FAR Part 95)

Minimum Safe Altitude Warning (MSAW). A software function of the air traffic ARTS II/III computer that is site specific. MSAW monitors Mode-C equipped aircraft for obstacle separation. It is designed to generate both aural and visual alerts at the air traffic controller's display when an aircraft is at or predicted to be at an unsafe altitude.

MSAW Approach Path Monitor (APM). An area normally 1 nm wide, either side of final approach course or runway heading. An APM starts at approximately 5 nm (or final approach fix) from the approach end of runway. An altitude value is determined for obstruction clearance for each APM at the beginning and at the end of the APM. These two values provide MSAW protection as an aircraft descends along the approach path towards the runway. Parallel runways utilize the same APM. For a circling only SIAP, the APM starts at 5 nm (or FAF) from the closest landing surface, and terminates 1 – 2 nm from the closest landing surface.

MSAW General Terrain Map (GTM). The area within a 55-mile radius of an Airport Surveillance Radar in which Mode-C equipped aircraft are monitored by an MSAW computer software function for obstacle separation.

MSAW Bin. A 2 nm square area within an MSAW General Terrain Map; 4,096 bins make up an MSAW General Terrain Map.

MSAW Bin Altitude. An altitude that is determined by the highest obstacle within the MSAW bin, plus 500 ft.

Minimum Vectoring Altitude (MVA). The lowest MSL altitude at which an IFR aircraft will be vectored by a radar controller, except as otherwise authorized for radar approaches, departures and missed approaches. The altitude meets IFR obstacle clearance criteria. It may be lower than the published MEA along an airway or J-route segment. It may be utilized for radar vectoring only upon the controllers' determination that an adequate radar return is being received from the aircraft being controlled. Charts depicting minimum vectoring altitudes are normally available only to the controllers and not to pilots. (AIM)

Missed Approach Point (MAP). A point prescribed in each instrument approach procedure at which a missed approach procedure shall be executed if the required visual reference does not exist. (AIM: See Missed Approach and Segments of an Instrument Approach Procedure.)

Missed Approach Segment. The missed approach segment is initiated at the decision height in precision approaches and at a specified point in non-precision approaches. The missed approach must be simple, specify an altitude, and whenever practical, a clearance limit (end of the missed approach segment). The missed approach altitude specified in the procedure shall be sufficient to permit holding or en route flight.

MLS Approach Reference Datum. A point at a specified height located vertically above the intersection of the runway centerline and the threshold.

MLS Auxiliary Data. Data, transmitted in addition to basic data, that provide facilities maintenance equipment siting information for use in refining airborne position calculations and other supplementary information.

MLS Basic Data. Data transmitted by the facilities maintenance equipment that are associated directly with the operation of the landing guidance system.

MLS Coverage Sector. A volume or airspace within which service is provided by a particular function and in which the signal power density is equal to or greater than the specified minimum.

MLS Datum Point. The point on the runway centerline closest to the phase center of the approach elevation antenna.

MLS Function. A particular service provided by the MLS; e.g., approach azimuth guidance, approach elevation guidance, or basic data, etc.

MLS Mean Course Error. The mean value of the azimuth error along a specified radial of the azimuth function.

MLS Mean Glidepath Error. The mean value of the elevation error along a specified angle of the elevation function.

MLS Minimum Glidepath. The lowest angle of descent along the zero-degree azimuth that is consistent with published approach procedures and obstacle clearance criteria.

MLS-Point "A". An imaginary point on the minimum glidepath and commissioned azimuth radial, 4 nautical miles from the runway threshold.

MLS-Point "B". An imaginary point on the minimum glidepath and commissioned azimuth radial, 3,500 ft from the runway threshold.

MLS-Point "C". A point through which the downward extended straight portion of the glidepath passes at a height of 100 ft above the horizontal plane containing the runway threshold.

Note: Azimuth only facilities, Point C is the missed approach point.

MLS-Point "D". A point 12 ft above the runway centerline and 3,000 ft from the runway threshold in the direction of the azimuth station.

MLS-Point "E". A point 12 ft above the runway centerline and 2,000 ft from the stop end of the runway in the direction of the runway threshold.

MLS Proportional Guidance Sector. The volume of airspace within which the angular guidance information provided by a function is directly proportional to the angular displacement of the airborne antenna with respect to the zero angle difference.

MLS Reference Point. The point at which flight inspection begins to apply facility budget error tolerances. This will normally be either the ARD or MAP.

Mode. The letter or number assigned to a specific pulse spacing of radio signals transmitted or received by ground interrogator or airborne transponder components of the Air Traffic Control Radar Beacon System (ATCRBS). Mode A (military Mode 3), Mode C (altitude reporting), and Mode S (data link) are used in air traffic control. (See transponder, interrogator, radar.) (AIM)

ICAO-Mode (SSR) Mode. The letter or number assigned to a specific pulse spacing of the interrogation signals transmitted by an interrogator. There are five modes: A, B, C, D, and M--corresponding to five different interrogation pulse spacings.

Moving Target Detection (MTD). Type of moving target detection system (like MTI) based on digital storage map techniques. Used in newer primary radars.

Moving Target Indicator (MTI). Electronic circuitry that permits the radar display presentation of only targets which are in motion. A partial remedy for ground clutter.

MTI Reflector. A fixed device with electrical characteristics of a moving target which allows the demonstration of a fixed geographic reference on a MTI display. (Used to align video maps, azimuth reference, etc.)

Multi-Mode Receiver (MMR). A navigation receiver with multiple capabilities in one unit (i.e., ILS, VOR, WAAS, and LAAS).

Narrowband Radar Display. Computer generated display of radar signals.

National Flight Data Center (NFDC). A facility in Washington, D.C., established by FAA to operate a central aeronautical information service for the collection, validation, and dissemination of aeronautical data in support of the activities of government, industry, and the aviation community. The information is published in the National Flight Data Digest. (AIM: See National Flight Data Digest.)

National Transportation Safety Board (NTSB). Office responsible for aircraft accident investigations.

NAVAID. Any facility used in, available for use in, or designated for use in aid of air navigation, including landing areas, lights, any apparatus or equipment for disseminating weather information, for signaling, for radio direction finding, or for radio or other electronic communication, and any other structure or mechanism having a similar purpose for guiding or controlling flight in the air or the landing or takeoff of aircraft. (Re: Federal Aviation Act of 1958, as amended.) (AIM)

Nondirectional Beacon/Radio Beacon (NDB). An L/MF or UHF radio beacon transmitting nondirectional signals whereby the pilot of an aircraft equipped with direction finding equipment can determine his bearing to or from the radio beacon and "home" on or track to or from the station. When the radio beacon is installed in conjunction with the Instrument Landing System marker, it is normally called Compass Locator. (AIM)

Nonprecision Approach Procedure/ Nonprecision Approach. A standard instrument approach procedure in which no electronic glide slope is provided; e.g., VOR, TACAN, NDB, LOC, ASR, LDA, or SDF approaches. (AIM)

Notices to Airmen/Publication. A publication designed primarily as a pilot's operational manual containing current NOTAM information (see Notices to Airmen - NOTAM) considered essential to the safety of flight, as well as supplement data to other aeronautical publications. (AIM)

Notices to Airmen/NOTAM. A notice containing information (not known sufficiently in advance to publicize by other means) concerning the establishment, condition, or change in any component (facility, service, or procedure of, or hazard in the National Airspace System) the timely knowledge of which is essential to personnel concerned with flight operations. (AIM)

a. NOTAM (D) - A NOTAM given (in addition to local dissemination) distant dissemination via teletype writer beyond the area of responsibility of the Flight Service Station. These NOTAMS will be stored and repeated hourly until canceled.

b. NOTAM (L) - A NOTAM given local dissemination by voice (teletypewriter where applicable), and a wide variety of means such as: TelAutograph, teleprinter, facsimile reproduction, hot line, telecopier, telegraph, and telephone to satisfy local user requirements.

c. FDC NOTAM A notice to airmen, regulatory in nature, transmitted by NFDC and given all-circuit dissemination.

d. ICAO NOTAM. A notice, containing information concerning the establishment, condition, or change in any aeronautical facility, service, procedure, or hazard, the timely knowledge of which is essential to personnel concerned with flight operations. (AIM)

Null. That area of an electromagnetic pattern where the signal has been intentionally canceled or unintentionally reduced to an unacceptable level.

Obstacle. An existing object, object of natural growth, or terrain at a fixed geographical location, or which may be expected at a fixed location within a prescribed area, with reference to which vertical clearance is or must be provided during flight operation. (AIM)

Obstacle Clearance. The vertical distance between the lowest authorized flight altitude and a prescribed surface within a specified area. (FAA Order 8260.19, latest revision)

Obstruction. An object which penetrates an imaginary surface described in FAR Part 77. (AIM) (Refer to FAR Part 77).

Omnibearing Selector (OBS). An instrument capable of being set to any desired bearing of an omnirange station and which controls a course deviation indicator.

On-Course. The locus of points in the horizontal plane in which a zero or on-course reading is received.

On-Path. Same as on-course but in the vertical plane. See ILS--Glidepath.

Operational Advantage. An improvement which benefits the users of an instrument procedure. Achievement of lower minimums or authorization for a straight-in approach with no derogation of safety are examples of an operational advantage. Many of the options in TERP's are specified for this purpose. For instance, the flexible final approach course alignment criteria may permit the ALS to be used for reduced visibility credit by selection of the proper optional course. (FAA Order 8260.3, latest revision)

Optimum Error Distribution. Best overall facility alignment error distribution to achieve maximum operational benefits (not necessarily a perfect balance of the errors).

Orbit Flight. Flight around a station at predetermined altitude(s) and constant radius.

Orthometric Height. Elevation above the geoid.

Oscilloscope. An instrument for showing visually, graphic representations of the waveforms encountered in electrical circuits.

Out-of-Coverage Indication (OCI). A signal radiated into areas outside the intended coverage sector where required to specifically prevent invalid removal of an airborne warning indication flag in the presence of misleading guidance information.

Out of Tolerance Condition. See Discrepancy.

Path Following Error (PFE). The guidance perturbations which the aircraft will follow. It is composed of a path following noise and of the mean course error in the case of azimuth functions or the mean glidepath error in the case of elevation functions.

Path Following Noise (PFN). That portion of the guidance signal error which could cause aircraft displacement from the mean course line or mean glidepath as appropriate.

Pilot-Controlled Lighting. Airfield lighting systems activated by VHF transmissions from the aircraft.

Pilot-Defined Procedure. Any data entered into an FMS or GPS navigator by the pilot, including waypoints, airports, runways, SID(s), routes, STAR(s), and approaches. For flight inspection of procedures, data must be entered from official source documentation.

Pilot Navigation Area (PNA). An area used to transition from RADAR vectoring to the area navigation route. The PNA is bounded by two lines, represented by the design maximum intercept courses leading to the departure intermediate fix, enclosed by and arc of specified radius centered on the departure intermediate fix.

Planned View Display (PVD). A display presenting computer generated information such as alphanumerics or video mapping.

Polarization Error. The error arising from the transmission or reception of a radiation having a polarization other than that intended for the system.

Position Estimation Error (PEE). The difference between true position and estimated position.

Primary Area. The area within a segment in which full obstacle clearance is applied. (FAA Order 8260.3, latest revision)

Proportional Guidance Sector. The volume of airspace within which the angular guidance information provided by a function is directly proportional to the angular displacement of the airborne antenna with respect to the zero angle reference.

Pseudo Random Noise (PRN). A signal coded with random-noise-like properties consisting of a repeating sequence of digital ones and zeros. The GPS C/ A code consists of 1,023 bits transmitted at a 1.023 MHz rate and, therefore, repeats every millisecond. Each GPS satellite has a unique PRN code. This code structure provides a low auto-correlation value for all delays or lags, except when they coincide exactly. Each SV has a unique pseudo-random noise code.

"Q" Factor. See Actual Navigation Performance.

Quadradar. Ground radar equipment named for its four presentations.

- **a. Height Finding**
- **b. Airport Surface Detection**
- **c. Surveillance**
- **d. Precision Approach**

/R. RNAV and transponder with altitude encoding capability.

Radar Bright Display Equipment (RBDE). Equipment at the ARTCC which converts radar video to a bright raster scan (TV type) display.

Radar Data Analysis Software (RDAS). A generic term referring to many types of terminal and en route radar data analysis tools. (COMDIG, RARRE, DRAM, etc.)

Radar Plan Position Indicator (RAPPI). Maintenance display used with CD-1 common digitizers.

Radar/Radio Detecting and Ranging. A device which, by measuring the time interval between transmission and reception of radio pulses and correlating the angular orientation of the radiated antenna beam or beams in azimuth and/or elevation, provides information on range, azimuth, and/or elevation of objects in the path of the transmitted pulses.

a. Primary Radar. A radar system in which a minute portion of a radio pulse transmitted from a site is reflected by an object and then received back at that site for processing and display at an air traffic control facility.

b. Secondary Radar/Radar Beacon/ ATCRBS. A radar system in which the object to be detected is fitted with cooperative equipment in the form of a radio receiver/transmitter (transponder). Radar pulses transmitted from the searching transmitter/receiver (interrogator) side are received in the cooperative equipment and used to trigger a distinctive transmission from the transponder.

This reply transmission, rather than a reflected signal, is then received back at the transmitter/receiver site for processing and display at an air traffic control facility. (See Transponder, Interrogator.) (AIM**)**

c. ICAO-Radar. A radio detection device which provides information on range, azimuth, and/or elevation of objects.

(1) Primary Radar. A radar system which uses reflected radio systems.

(2) Secondary Radar. A radar system wherein a radio signal transmitted from a radar station initiates the transmission of a radio signal from another station.

Radar Resolution - Azimuth. The angle in degrees by which two targets at the same range must be separated in azimuth in order to be distinguished on a radar scope as individual returns.

Radar Resolution - Range. The distance by which two targets at the same azimuth must be separated in range in order to be distinguished on a radar scope as individual returns.

Radar Route. A flight path or route over which an aircraft is vectored. Navigational guidance and altitude assignments are provided by ATC. (See Flight Path, Route.) (AIM)

Receiver Autonomous Integrity Monitoring (RAIM). A technique whereby a civil GPS receiver/processor determines the integrity of the GPS navigation signals without reference to sensors or non-DoD integrity systems other than the receiver itself. This determination is achieved by a consistency check among redundant pseudorange measurements.

Range of Validity. Area around a local area monitor where published Loran-C receiver TD calibration values are valid.

Radial. A magnetic bearing extending from a VOR/VORTAC/TACAN navigation facility. (AIM)

Range, Azimuth, Radar, Reinforced Evaluator (RARRE). An IBM 9020 radar diagonistic program which is used to evaluate narrowband radar.

Real Time Quality Check (RTQC). Internally generated test target in automated target processing devices (common digitizers, etc.)

Receiver Check Point. A specific point designated and published, over which a pilot may check the accuracy of his aircraft equipment, using signals from a specified station.

Recorder Event Mark. A galvo mark on a recorder related to a position or time, required for correlation of data in performance analysis.

Reference Radial. A radial, essentially free from terrain and side effects, designated as a reference for measuring certain parameters of facility performance.

Reference Voltage (VOR Reference Voltage). A 30 Hz voltage derived in the reference phase channel of the aircraft VOR receiver.

Required Navigation Performance (RNP). A statement of the navigational performance accuracy, integrity, continuity, and availability necessary for operation within a defined airspace.

RHO/THETA Position. Coordinate position described by distance and angle.

Ring-Around. A display produced on the scope by front, side, or back antenna lobes of the secondary radar system. It appears as a ring around the radar location and may occur when an aircraft transponder replies to ground interrogations while in close proximity to the antenna site.

RNAV DME/ DME Infrastructure. DME facilities, meeting accuracy, coverage and geometry requirements for a Flight Management System to compute a navigation solution for the intended operation.

Rotation (Correct Rotation). A condition wherein the transmitted azimuth angle increases in a clockwise direction.

Roughness. Rapid irregular excursions of the electromagnetic course or path.

Runway Approach Surface Baseline. An imaginary plane down the runway at the height of the runway surface at threshold.

Runway Environment. The runway threshold or approved lighting aids or other markings identifiable with the runway. (FAA Order 8260.3)

Runway Point of Intercept. The point where the extended glide slope intercepts the runway centerline on the runway surface.

Runway Reference Point. Where VGSI angle of visual approach path intersects runway profile (see RPI).

Runway Threshold. The beginning of that portion of the runway usable for landing. (AIM) (When used for flight inspection purposes, displaced threshold(s) or threshold mean the same thing.)

Scalloping. See Course Scalloping. (FAA Order 1000.15, latest revision)

Search (DME/TACAN). Rapid movement of the distance or bearing indicators during the period in which either is unlocked. (FAA Order 1000.15, latest revision)

Secondary Area. The area within a segment in which required Obstruction Clearance (ROC) is reduced as distance from the prescribed course is increased (FAA Order 8260.3, latest revision).

Segment. The basic functional division of an instrument approach procedure. The segment is oriented with respect to the course to be flown. Specific values for determining course alignment, obstacle clearance areas, descent gradients, and obstacle clearance requirements are associated with each segment according to its functional purpose. (FAA Order 8240.3, latest revision)

Sensing (Correct Sensing). A condition wherein the ambiguity indicator gives the correct To/From indication.

Sensitivity Time Control (STC). Procedure used to vary receiver sensitivity with range. Gain is reduced as a function of decreasing range, in an attempt to make all radar replies uniform. (Gain would be maximum to maximum range in this event.)

Service Volume/SV. That volume of airspace surrounding a NAVAID within which a signal of usable strength exists and where that signal is not operationally limited by co-channel interference.

Note: For VOR/TACAN/DME and ILS, the following definitions are used:

a. Standard Service Volume (SSV) - That volume of airspace defined by the national standard.

b. Flight Inspection Standard Service Volume (FISSV) is defined as follows: On "T" class facilities, this FISSV is 25 nm and 1,000 ft (2,000 ft in designated mountainous areas) above site elevation or intervening terrain. On "L" and "H" class facilities, the distance extends to 40 nm, and the altitudes are the same as for the "T" class. The FISSV is used to determine the performance status of VOR/TAC/DME facilities.

c. Expanded Service Volume (ESV) - That additional volume of airspace outside the standard service volume requested by the FAA's Air Traffic Service or procedure specialist and approved by frequency management of the Airway Facilities Division and flight inspection for operational use.

d. Operational Service Volume (OSV) - The airspace available for operational use. It includes the following:

(1) The SSV excluding any portion of the SSV which has been restricted.

(2) The ESV

Short-Term Excursions. Excursion characteristics of a navigation on-course or on-path signal which includes scalloping, roughness, and other aberrations but excludes bends.

Side Bands. The separated and distinct signals that are radiated whenever a carrier frequency is modulated. In terms of most air navigation facilities, double sidebands are present. This means that frequencies above and below the carrier frequency differing by the amount of the modulating frequencies are present. These sidebands contain intelligence for actuating navigation instruments.

Simplex. Single channel operation usually referred to at those sites using a single channel where dual channel (diplex) operation is available.

Splits. Two or more beacon targets generated from a single target reply. An undesirable condition due to problems in the beacon transmitter, antenna, propagation, aircraft transponder, or processing equipment.

Simplified Directional Facility/SDF. A NAVAID used for nonprecision instrument approaches. The final approach course is similar to that of an ILS localizer.

Slant Range. The line-of-sight distance between two points not at the same elevation.

Space-Based Augmentation System (SBAS) – The ICAO term applied to all wide-area augmentation systems. Corrected GPS data is transmitted to the aircraft by a geostationary satellite(s).

Stagger. A feature used with primary MTI radar systems to vary the PRF at pre-selected intervals. This moves the inherent blind speed to a less troublesome value.

Standard VOT. A facility intended for use on the ground only (See VHF Omnidirectional test range).

Structure. Excursion characteristics of a navigation on-course or on-path signal which includes bends, scalloping, roughness, and other aberrations.

Structure Below Path. An angular measurement of clearance below path.

Subclutter Visibility. A performance characteristic of the system to detect a moving target in the presence of relatively strong ground clutter.

Symbols:

G	10^9 times (a unit); giga
M	10^6 times (a unit); mega
k	10^3 times (a unit); kilo
h	10^2 times (a unit); hecto
dk	10 times (a unit); deca
d	10^{-1} times (a unit); deci
c	10^{-2} times (a unit); centi
m	10^{-3} times (a unit); milli
μ	10^{-6} times (a unit); micro
n	10^{-9} times (a unit); nano
μμ	10^{-12} times (a unit); micromicro
θ	Commissioned angle
Σ	Sum; Sum of; algebraic sum of:
>	Greater than:
<	Less than
≥	Equal to or greater than:
≤	Equal to or less than:
=	equals:
:	ratio; ratio of:
∴	therefore:

Symmetry. (ILS)—ICAO: Displacement sensitivity. A ratio between individual width sectors (90 Hz and 150 Hz) expressed in percent.

Systems Performance Analysis Rating (SPAR). A rating based on performance or expected performance. These ratings are related to flight inspection intervals as follows:

SPAR Class 1, 90-day interval; Class 2, 180-day interval; Class 3, 270-day interval.

TACAN Distance Indicator (TDI). A unit of airborne equipment used to indicate distance from a selected facility.

Target of Opportunity. An itinerant aircraft operating within the coverage area of the radar and which meets the requirements for a small aircraft as described in FAA Order 8200.1 (latest revision) Section 215.

Target Return. The return signal transmitted by a beacon-equipped aircraft in reply to the ground facility interrogator. Also, indication shown on a radar display resulting from a primary radar return.

Threshold. See Runway Threshold.

Touchdown Zone (TDZ). The first 3,000 ft of runway beginning at the threshold. (See FAA Order 8260.3, latest revision).

Touchdown Zone Elevation. The highest runway centerline elevation in the touchdown zone.

Total System Error (TSE). The position error is represented by the Total System Error (TSE), which is a combination of the Flight Technical Error (FTE) and the Navigation System Error (NSE). The NSE is the error in position due to navigation, such as Global Positioning System (GPS), Distance Measuring Equipment (DME/ DME), or Very High Frequency Omni Directional Range (VOR/ DME). FTE is the difference between the position estimated by the Flight Management System (FMS) and the desired aircraft position.

Tracking. Condition of continuous distance or course information.

Transponder. The airborne radar beacon receiver/transmitter portion of the Air Traffic Radar Beacon System (ATCRBS) which automatically receives radio signals from interrogators on the ground, and selectively replies with a specific reply pulse or pulse group only to those interrogations being received on the mode to which it is set to respond. (See Interrogator.) (AIM)

Trend. The general direction or incline of a segment of the glidepath which persists for a distance of 1,500 ft or more along the approach course.

Un-Lock. Condition at which the airborne interrogator (TACAN) discontinues tracking and starts search.

Usable Distance. The maximum distance at a specified altitude at which the facility provides readable identification and reliable bearing or glidepath information under average atmospheric condition.

Variable Voltage (VOR Variable Voltage). A 30 Hz voltage derived in the variable phase channel of the aircraft VOR receiver.

Vertical Alert Limit (VAL). Half the length of a segment on the vertical axis, with its center being at the true position, which describes the region, which is required to contain the indicated vertical position with a probability of $1\text{-}10^{-7}$ per flight hour.

Vertical Angle. An angle measured upward from a horizontal plane.

VHF Omnidirectional test range (VOT). A radio transmitter facility in the terminal area electronic navigation systems, radiating a VHF radio wave modulated by two signals having the same phase relationship at all azimuths. It enables a user to determine the operational status of a VOR receiver. (See Standard VOT and Area VOT.)

Video Map. An electronic displayed map on the radar display that may depict data such as airports, heliports, runway centerline extensions, hospital emergency landing areas, NAVAIDs and fixes, reporting points, airway/route centerlines, boundaries, handoff points, special use tracks, obstructors, prominent geographic features, map alignment indicators, range accuracy marks, and minimum vectoring altitudes (AIM).

Visual Descent Point (VDP). The visual descent point is a defined point on the final approach procedure from which normal descent from the MDA to the runway touchdown point may be commenced, provided visual reference is established. (AIM)

Visual Glide Slope Indicator (VGSI). Ground devices that use lights to define a vertical approach path during the final approach to a runway.

Visual Glide Slope Indicator (VGSI) slow transition. Result of a poorly focused VGSI box where the transition from red to white, or vice versa, occurs abnormally slow. This is most noticeable during level runs.

VORTAC. A facility composed of azimuthal information from both VOR and TACAN, plus distance information of TACAN.

VOT—Standard. See Standard VOT.

VOT—Area Use. See Area VOT.

VOT Reference Point. A point on or above an airport at which the signal strength of a VOT is established and subsequently checked (applies to both standard and area VOTs).

Waveform. The shape of the wave obtained when instantaneous values of an a.c. quantity are plotted against time in rectangular coordinates.

Waveguide. A hollow pipe usually of rectangular cross section used to transmit or conduct RF energy.

Wavelength. The distance usually expressed in meters traveled by a wave during the timer interval of one complete cycle. Equal to the velocity divided by the frequency.

Wide Area Augmentation System (WAAS). A system comprised of two Wide-Are Master Control Stations (WMS), Geostationary Earth Orbit (GEO) communications satellites, Ground Uplink Stations (GUS), and 25 Wide-area Reference Stations (WRS). The WAAS provides improved accuracy, integrity, and availability over the standard GPS signal. Future addition of WSR(s), GEO(s), and other WAAS enhancements are expected to increase WAAS capability to support full CAT I approach requirements.

9960 Hz Voltage. A voltage derived from the VOR 9960 amplitude modulation by the reference channel of the VOR receiver. The 9960 Hz AM is a subcarrier which is frequency modulated by the 30Hz reference. Also referred to the 10 kHz sub-carrier.

SECTION 2. ABBREVIATIONS, ACRONYMS, AND LETTER SYMBOLS

A	: Ampere
a.c.	: alternating current
AC	: advisory circular
ADF	: automatic direction finding
ADP	: automatic data processing
AER	: approach end of runway
AF	: Airway Facilities
AFB	: Air Force Base
AFC	: automatic frequency control
AFIS	: automated flight inspection system
AGC	: automatic gain control
AGL	: above ground level
AIM	: Airmen's Information Manual
air	: airborne
align	: alignment
ALS	: approach lighting system
ALSF	: approach lighting system withsequenced flashing lights
am.	: ammeter
AM	: amplitude modulation
amp	: Ampere
ANF	: air navigation facility
ANP	: actual navigation performance
ant	: antenna
APM	: Approach Path Monitor
APPCON	: approach control
APV	: non-standard approach with vertical guidance
ARAC	: Army radar approach control
ARD	: approach reference datum
ARG	: auxiliary reference group
ARR	**:** automated flight inspection system reference radial
ARSR	: air route surveillance radar
ARTCC	: air route traffic control center
ARTS	: automated radar terminal system
ASBL	: approach surface baseline
ASIS	: Aviation Standards Information System
ASOS	: automated surface aviation observing system
ASR	: airport surveillance radar
AT	: air traffic
ATC	: air traffic control
ATCALS	: Air Traffic Control and Landing System
ATCRBS	: Air Traffic Control Radar Beacon System
ATIS	: Automatic Terminal Information Service
ATKER	: along track error

AVN : Office of Aviation System Standards
AWOS : automatic weather observation system
az : azimuth
Az-El : azimuth-elevation

Baz : back azimuth horizontal guidance
BCM : back course marker
bcn : beacon
BFTA : beacon false target analysis
BPS : bits per second
BIT : a digit in a binary coded decimal
BRITE : brite radar indicator tower equipment
BUEC : backup emergency communications
BW : beam width

c : centi ($=10^{-2}$)
C : Celsius
°C : degrees Celsius
C/A code : coarse/acquisition code
cal : calibrate, calibrated
CAS : calibrated airspeed
CAT : category
CCW : counterclockwise
CD : common digitizer
CDI : course deviation indicator
CDU : control display unit
CEU : control electronic unit
CHAIN : a group of Loran C stations
chan : channel
chg : change
CIC : combat information center
CL : centerline
Comm : Commission
CMLSA : Commercial MLS Avionics
CMN : control motion noise
COMDIG : common digitizer data reduction
COMLO : compass locator
CONUS : continental United States
COP : change-over-point
CSV : comma-separated values file
CTOL : conventional takeoff and landing
CP : circular polarization
CW : clockwise

d : deci (=10^{-1})
DA : decision altitude
DAME : distance azimuth measuring equipment
db decibel
dB/Hz : Decibel/Hertz
dbm : decibel referred to 1 milliwatt
DBRITE : Digital Bright Radar Indicator Tower Equipment
dbw : decibel referred to 1 watt
d.c. : direct current
DDM : difference in depth of modulation
DER : Departure End of Runway
DEU : DME electronic unit
DF : direction finding
DFL : Daily Flight Log
DGPS : differential global positioning system
DH : decision height
disc : discrepancy
DME : distance measuring equipment
DME/N : distance measuring equipment/ non precision (standard DME)
DME/P : distance measuring equipment/ precision
DOD : Department of Defense
DOP : dilution of precision
DOT : Department of Transportation
DP : departure procedure
DPSK : differential phase shift keying
DVOR : doppler very high frequency omni-directional range

E. : East
EARTS : en route automated radar tracking service
ECD : envelope to cycle discrepancy (difference)
ECOM : enroute communications
ECM : electronic counter measures
EFIS : electronic flight instrument system
e.g. : exempli gratia (for example)
el : elevation
EMI : electromagnetic interference
ESV : expanded service volume
et al. : et alibi (and elsewhere; et alii (and others)
etc. : etcetera (and the rest; and so forth)

F : Fahrenheit
°F : degrees Fahrenheit
FAA : Federal Aviation Administration
FAC : final approach course
FAF : final approach fix
FANS : Future Air Navigation System (ICAO)
FAP : final approach point
FAR : Federal Aviation Regulations
FAS : final approach segment
FAWP : final approach waypoint
FBWP : flyby waypoint
FICO : Flight Inspection Central Operations
FIP : Flight Inspection and Procedures (staff)
fig. : figure
FM : fan marker
FM : frequency modulation
FMO : Frequency Management Office
FMS : flight management system
FOWP : flyover waypoint
freq : frequency
FSS : flight service station
FTC : fast time constant

G : giga (=10^9)
galv : galvanometers
GBAS : ground-based augmentation system
GCA : ground contolled approach
GDOP : geometric dilution of precision
GHz : gigahertz
GLS : GPS landing system

govt. : government
Gnd : ground
GNSS : Global Navigation Satellite System
GPI : ground point of intercept
GRI : ground repetition interval
GS : glide slope
GSI : glide slope intercept altitude (Point)
GTC : gain time control
GTM: : General Terrain Map

h : hecto (-10^2); hour
H : homer
HAA : height above airport elevation
HAT : height above touchdown
H-Class : high altitude
HDOP : horizontal dilution of precision
HF : high frequency
HF/DF : high frequency/direction finding
HFOM : horizontal figure of merit
HIL : horizontal integrity limit
HIRLS : high intensity runway lighting system
HIWAS : Hazardous Inflight Weather Advisory Service
HLOM : H Class compass locator at outer marker
Hz : Hertz

IAC : initial approach course
IAF : initial approach fix
IAS : indicated airspeed
IAWP : initial approach waypoint
IC : intermediate course
ICAO : International Civil Aviation Organization
IIC : investigator-in-charge
ID : identification
i.e. : id est (that is)
IF : intermediate fix
IFIO : International Flight Inspection Office
IFR : Instrument Flight Rules
IFSS : international flight service stations
ILS : instrument landing system
IM : inner marker
INS : inertial navigation system
IO : input-output
IRU : inertial reference unit
ips : inches per second
ISLS : improved side lobe suppression
IWP : intermediate waypoint

JAI : joint acceptance inspection
JSS : joint surveillance site

k : Kilo (=10^3)
kHz : kilohertz
KIAS : knots indicated airspeed
kn : knots
kW : kilowatt

LAAS : local area augmentation system
LAM : local area monitor
lat. : latitude
L-Class : low altitude VOR
LDA : localizer directional aid
LDIN : lead-in lights
LEPP : live environment performance program
LF : low frequency
LMM : compass locator at middle marker
LOC : localizer
LOM : compass locator at outer marker
long. : longitude
LOP : line-of-position
Loran : long range navigation
LOS : line of site
LP : linear polarization
LRCO : limited remote communications outlet
LSA : lower standard altitude
LSES : loran signal evaluation system

m : meter
M : mega (=10^6)
mA : milliampere
MAA : maximum authorized altitude
MAHP : missed approach holding point
MAHWP : missed approach holding waypoint
MALS : medium intensity approach lights—5,000 cp
MALSF : medium intensity approach lights; sequenced flashing lights
MALSR : same as MALSF; runway alignment indicator lights
MAP : missed approach point
MATWP : missed approach turning waypoint
MAWP : missed approach waypoint
MB : marker beacon
MCA : minimum crossing altitude
MCE : mean course error
MDA : minimum descent altitude
MDP : MLS datum point
MEA : minimum en route altitude
MEARTS : micro en route automated radar tracking system
MF : medium frequency
MGP : minimum glide path
MHA : minimum holding altitude
Mhz : megahertz
MIRL : medium intensity runway lights

MLOM : MH Class compass locator at outer marker
MLS : microwave landing system
MM : middle marker
MOCA : minimum obstruction clearance altitude
MRA : minimum reception altitude
MOPS : minimum operational performance standards
MRG : main reference group
MSAW : minimum safe altitude warning
MSG : minimum selectable glidepath
MSL : mean sea level
MTD : moving target detection
MTI : moving target indicator
MTR : mission test report
MSAW : minimum safe altitude warning
MUA : maximum usable altitude
mV : millivolt
MVA : minimum vectoring altitude
MVAR : magnetic variation

n : nano (=10^{-9})
N. : North
NA : not applicable or not authorized (when applied to instrument approach procedures)
NACO : National Aeronautical Charting Office
NAS : National Airspace System
NASE : Navigational Aids Signal Evaluator
NAVAID : air navigation facility
NDB : nondirectional beacons
NFDC : National Flight Data Center
nm : nautical mile
NOTAM : Notice to Airmen
NRKM : nonradar keyboard multiplexer
NTSB : National Transportation Safety Board

OBS : omnibearing selector
OCI : out of coverage indication
ODALS : omnidirectional approach lighting system
OM : outer marker
orb. : orbit
OVLY : GPS overlay crosstrack error
XTKER

PAPI : precision approach path indicator
P code : precision code
PAR : precision approach radar
PD : power density
PDOP : precision dilution of position
PE : permanent echo
PEE : position estimation error
PFE : path following error
PFN : path following noise
PIDP : programmable indicator data processor
PNA : pilot navigation area
PPI : plan position indicator
PPS : precise positioning service, P-code
PRF : pulse-repetition frequency
PRN : pseudo-range number
PT : procedure turn
PVD : plan view display

QARS : quick analysis of radar sites

RADAR
or radar : radio range and detecting
RADES : Radar Evaluation Squadron (military)
RAG : range and azimuth gating
RAIL : runway alignment indicator light
RAIM : receiver autonomous integrity monitoring
RAPCON : radar approach control (USAF)
RAPPI : Radar plan position indicator
RARRE : range, azimuth radar reenforced evaluator
RATCC : radar approach control center (USN)
RBDE : radar bright display equipment
RCAG : remote, center air/ground communication facility
RCO : remote communication outlet
RDAS : radar data analysis software
RDH : reference datum height
rec : receiver
ref : reference
REIL : runway end identifier light
RF : radio frequency
RFI : radio frequency interference
RMI : radio magnetic indicator
RML : radar microwave link
RNAV : area navigation
RNP : required navigation performance
ROC : required obstruction clearance

RPI : runway point of intercept
RPM : revolutions per minute
RRP : runway reference point
RSCAN : radar statistical coverage analysis system
RTQC : real time quality check
R/T : receiver-transmitter
RTT : radio telemetering theodolite
RVR : runway visual range
RVV : runway visual value
RWY : runway

s : second
S. : South
SA : selective availability
SALS : short approach light system
SAVASI : simplified abbreviated visual approach slope indicator system

SBAS : space-based augmentation system

SDF : simplified directional facility
sec : second
SECRA : secondary radar
SER : stop end of runway
SIAP : standard instrument approach procedure
SID : standard instrument departure
SINE : site integration of NAS equipment
SLS : side lobe suppression
SNR : Signal-to-noise ratio
SNR-FS : Signal-to-noise ratio-field strength
SNR-PH : Signal-to-noise ratio-phase
SPAR : system performance analysis rating
SPS : standard positioning service, C/A code
SSALF : simplified short approach light system; sequenced flashing lights
SSALR : same as SSALF; runway alignment indicator lights
SSV : standard service volume
STAR : standard terminal arrival route
STC : sensitivity time control
STOL : short takeoff and landing

TACAN : tactical air navigation
TAR : test analysis report
TCH : threshold crossing height
T-Class : terminal VOR, TACAN, or VORTAC
TCOM : terminal communications
TD : time difference
TDI : TACAN distance indicator
TDM : time division multiplex
TDR : touchdown reflector
TDZ : touchdown zone
TDZL : touchdown zone lights
TERPS : terminal instrument procedures
TH : threshold
TLS : Transponder Landing System
TOWP : take-off waypoint
T/R : transponder-radar (system)
TRACALS : traffic control and landing systems
TRACON : terminal radar approach control (FAA)
TRIAD : 3 Loran C stations of a specific chain
TRSB : time reference scanning beam
TSE : total system error
T-VASI : T (configuration)—visual approach slope indicator
TVOR : terminal VOR
TWEB : transcribed weather broadcast equipment

u : micro
UDF : ultra high frequency direction finder
UHF : ultra high frequency
USA : United States Army
USN : United States Navy
USAF : United States Air Force
USSFIM : United States Standard Flight Inspection Manual
UTC : universal coordinated time

V : volt
var. : variation
VASI : visual approach slope indicator
VDF : very high frequency direction finder
VDOP : vertical dilution of precision
VDP : visual descent point
VFIP : VFR flight inspection program
VFR : visual flight rules
VGSI : visual glide slope indicator

VHF : very high frequency
VLF : very low frequency
VNAV : vertical navigation
VOR : very high frequency omnidirectional range
VORDME : very high frequency omnidirectional range, distance measuring equipment
VOT : very high frequency omnidirectional range test
VP : vertical polarization
V/STOL : vertical/short takeoff and landing
VORTAC : very high frequency omnidirectional range, tactal air navigation

W : watt
W. : West

WGS-84 : World Geodetic Survey of 1984
WPDE : waypoint displacement error
WP : waypoint

Xmtr : transmitter
XTK : receiver cross-track information
XTKER : crosstrack error

Z : zulu time (Greenwich mean time)

This Page Intentionally Left Blank

APPENDIX 2. FORMULAS

TABLE OF CONTENTS

Paragraph *Title* *Pages*

A2.1 INTRODUCTION A2-1

A2.2 GENERAL A2-1

A2.3 TACAN A2-4

A2.4 MARKERS (75 MHz) A2-4

A2.5 RADAR A2-5

A2.6 LOCALIZER A2-5

A2.7 GLIDE SLOPE A2-6

A2.8 PRECISION APPROACH A2-6

A2.9 PROCEDURES A2-7

A2.10 MLS PFE/ PFN ANGULAR TOLERANCE A2-8

A2.11 FMS WAYPOINT DME EVALUATION ORBIT/ ARC RADIUS A2-8

APPENDIX 2. FORMULAS

A2.1 Introduction. The following formulas and methods of calculation are presented as a ready reference.

A2.2 General. The following information is of a general nature, and use of it may be applicable to more than one facility.

a. Constants Used in this Order. Following is a list of constants used in this order. Others are unique to a particular formula and can be found in reference material concerning the subject.

Constant	Definition/Derivation
6076.1	feet per nautical mile
3600	seconds per hour
106	tan 1° (6076.1)
0.00943	$\frac{1}{\tan 1^\circ (6076.1)}$
0.0159	$\frac{6076.1}{(3600)(106)}$
0.592	$\frac{3600}{6076.1}$

b. Rounding. Measurements and calculations should be carried to one decimal place more than that required for tolerance application. Then apply the following criteria to round off a measurement.

Numbers 1 to 5 - round off to zero
Numbers 6 to 9 - round off to the next higher value.

Example: Glidepath Course Width:

0.755^{o} = 0.75^{o} and
0.756^{o} = 0.76^{o}

Exception: When a value exceeds a tolerance, it should not be rounded off to an in-tolerance condition.

Example: Glidepath Course Width:

= 0.903^{o} is out of tolerance.

c. Time Average

$$T_{av} = \frac{2(T_1 \times T_2)}{(T_1 + T_2)}$$

Where:

T_{av} = Time average
T_1 = Time to cross in one direction
T_2 = Time to cross in opposite direction

d. Conversion of Knots to Feet per Second

$$V = \frac{6076.1 \times V_k}{3600}$$

Where:

V = Velocity (ft per sec)
V_k = Velocity (knots)

e. Slant Angle

$$\angle = \text{arc tan } \frac{A}{D}$$

Where:

A = Altitude above the horizontal (ft)
D = Geodetic distance (ft)
$\angle$ = Slant Angle (degrees)

f. Slant Range to Chart Distance

$$S = \frac{D}{\cos \angle}$$

Where:

D = Geodetic distance (ft)
S = Slant range distance (ft)
$\angle$ = Slant Angle (degrees)

g. Chart Distance to Slant Range

$D = S \cos \angle$

Where:

D = Geodetic distance (ft)
S = Slant range distance (ft)
$\angle$ = Slant angle (degrees)

h. Radio Line of Sight

$D = 1.23 \left(\sqrt{H_r} + \sqrt{H_t}\right)$

Where:

D = Radio Line of Sight Distance (nm)
Hr = Height of receiving antenna (ft)
Ht = Height of transmitting antenna (ft)

i. Earth Curvature

$Ec = (D)^2 (0.883)$

Where:

Ec = Earth Curvature (ft)
D = Distance from a point (nm)

j. True Altitude

TA= CA + (CA-FE) * (ISADEV) / (273+OAT)

Where:
TA= True Altitude above sea level

FE= Field Elevation of station providing the alitimeter setting

CA= Altitude indicated by altimeter when set to the altimeter setting, corrected for calibration error

ISADEV= Average deviation from standard temperature from standard in the air column between the station and the aircraft (in degrees C)

OAT= Outside air temperature (at altitude)

A2.3 TACAN

Modulation Percentage 135 and 15 Hz

$$\text{15 Hz modulation} = \frac{(V_1 + V_2) - (V_3 + V_4)}{(V_1 + V_2) + (V_3 + V_4)}$$

$$\text{135 Hz modulation} = \frac{(V_1 + V_3) - (V_2 - V_4)}{(V_1 + V_2) + (V_3 + V_4)}$$

Where:

V_1 = Max of 135 Hz and 15 Hz
V_2 = Min of 135 Hz at max of 15 Hz
V_3 = Max of 135 Hz and 15 Hz at min 15 Hz
V_4 = Min 135 and 15 Hz at min 15 Hz

A2.4 Markers (75 MHz)

Marker Width

$$W_{ft} = \frac{(TAS)(T_{av})}{0{,}592} \quad \text{or}$$

$$W_{ft} = \frac{(G_s)(T)}{0.592} \quad \text{or}$$

$$W_{nm} = \frac{(TAS)(T_{av})}{3600}$$

Where:

G_s = Ground Speed (knots)
W_{ft} = Width (ft)
W_{nm} = Width (nm)
T = Time (sec)
TAS = True Airspeed (knots)
T_{av} = Time Average (sec)

A2.5 Radar

Blind Speed using Non-Staggered or Uniform Pulse

$$V = \frac{291(PRF)}{F}$$

Where:
V = Groundspeed (knots)
PRF = Pulse Repetition Frequency (pulses/sec)
F = Transmitter Frequency (Mhz)

A2.6 Localizer

a. Course Width

$$W = \frac{0.0159(ETAS)(T_{av})}{D}$$

Where:
W = Width (degrees)
ETAS = Effective True Airspeed (knots)
T_{av} = Time Average for course crossing (sec)
D = Distance from the localizer antenna to the point where the aircraft cross the localizer course (nm to the nearest thousandth)

Computed true airspeed (TAS) may be used if correction for crosswind component is applied from Figure 3 in Appendix 3.

b. Determining Localizer Tailored Width

$$W = 2\left(\arctan\left(\frac{350}{D}\right)\right)$$

Where:
W = Tailored Width (degrees)
D = Distance from the localizer antenna to the runway threshold (ft)

c. Dual Frequency Localizer Power Ratio

$$dB = 20\left(\log \frac{E_1}{E_2}\right)$$

Where:
dB = Power ratio (dB)
E_1 = Signal Strength of course transmitter as read from the AGC Meter (μvolts)
E_2 = Signal Strength of clearance transmitter as read from the AGC Meter (μvolts)

A2.7 Glide Slope

Glidepath Width or Angles

$$\theta = \text{arc tan } \frac{A}{D \pm F}$$

Where:

θ = Angle (degrees)
A = Absolute (Tapeline) altitude (ft) above the glide slope antenna
D = Geodetic distance (ft) from the glide slope antenna to the outer marker (or checkpoint)

$$F = 6076.1 \left(\frac{V}{3600}\right) T$$

NOTE: F is a factor. The value and sign (plus or minus) is determined by the location of the computation point on the recording.

- Assign a minus value to F if T occurs between the outer marker (or checkpoint) and the facility
- Assign a plus value to F if T occurs prior to the outer marker (or checkpoint)

V = Ground speed (knots)
T = Time to computation point (e.g., 75µA, 150HZ, 0µA, 75µA 90Hz for path width, and angle)

Glideslope distance – Threshold to Point C calculation:

$$\left[\frac{100+(\text{threshold elevation-GPI elevation}}{\text{tangent of the commissioned angle}}\right] \text{-Distance to threshold}$$

A2.8 Precision Approach

a. Level Run Glidepath Angle (using paper units)

(1) $$\theta = \frac{A(0.00943)}{D}$$

Where:

θ = Glidepath Angle (degrees)
A = Absolute (Tapeline) altitude (ft) above the glide slope antenna
D = Distance from the Runway Point of Intercept (RPI) to the point where the glidepath is crossed (nm to the nearest thousandth)

(2) $$\theta = \frac{A(I_1)}{106(D)(I_2)}$$

Where:

θ = Glidepath Angle (degrees)
A = Absolute (Tapeline) altitude (ft) above the glide slope antenna
I_1 = Inches or units of recording paper from surveyed checkpoint to RPI
I_2 = Inches or units of recording paper from RPI to the point where the glidepath is crossed
D = Distance from the Runway Point of Intercept (RPI) to the point where the glidepath is crossed (nm to the nearest thousandth)

b. Altimetry Method

$$\text{Measured Angle} = \frac{A1}{106 \times D}$$

Where:

A1 = Tapeline altitude in feet
D = Distance in nautical miles from RPI

A2.9 Procedures

Gradient and Climb Rates

$$\frac{Cfd}{60} : \frac{Gr}{1} : \frac{Cr}{Gs}$$

Where:

Cfd = Climb rate (ft/nm)
Gr = Gradient (in percent/100)
Cr = Rate of Climb (ft/min)
Gs = Ground Speed (knots)
This formula is expressed as a ratio which can be solved directly on a pilot's computer (e.g., Jeppson CR-3)

A2.10 MLS PFE/ PFN/ CMN Angular Tolerance

$$\theta = \arctan \frac{Tf}{D}$$

Where:

θ = Angular Tolerance at measure point.
Tf = PFE/PFN/CMN Tolerance in feet
D = Distance in feet from Azimuth antenna to Tolerance reference Point (ARD or MAP)

A2.11 FMS Waypoint DME Evaluation Orbit/Arc Radius.

R = 0.0125D +0.25NM + XTRK

Where:

R = Radius in nm of orbit or arc
D = Distance in nm from the DME station farthest from the waypoint.
XTRK = Waypoint design criteria from Order 8260.40

NOTE: The XTRK value is .6 nm for Initial Approach, Intermediate, Final Approach, Missed Approach, and missed approach holding waypoints, 2.0 nm for feeder waypoints, and 3.0 nm for en route waypoints.

APPENDIX 3. MICROWAVE SCANNING BEAM LANDING SYSTEM (MSBLS) PROCEDURES

TABLE OF CONTENTS

Paragraph	*Title*	*Page*
A3.1	INTRODUCTION	A3-1
A3.2	DATABASE	A3-1
A3.3	TRUTH SYSTEM	A3-1
A3.4	LIMITATIONS	A3-1
A3.5	PROCEDURES	A3-2
A3.6	FLIGHT INSPECTION MODES	A3-4
	a. Arcs	A3-4
	b. Radials	A3-4
	c. Approaches	A3-4
A3.7	FMS PROGRAMMING	A3-4

APPENDIX 3. MICROWAVE SCANNING BEAM LANDING SYSTEM (MSBLS) PROCEDURES

A3.1 INTRODUCTION. The MSBLS is a precision approach and landing system that provides slant range, azimuth, and elevation data to NASA's Shuttle Orbiter during terminal area energy management, approach, and landing phases of the Shuttle at CONUS based End of Mission and Transatlantic Abort Landing sites in Spain, Morocco, and France. Unlike a conventional MLS, the MSBLS does not provide a published procedural azimuth track at a fixed angle of descent. It provides the Shuttle's Guidance, Navigation, and Control (GN&C) computer continuous digital azimuth, elevation, and range signal offsets relative to the MSBLS antenna phase centers. The GN&C computer, in turn, steers the Shuttle on a user programmed approach and landing profile using multiple azimuth tracks and elevation angles.

A3.2 DATABASE. Dual transmitter MSBLS installations, called MSBLS GS (Ground Station) or MSBLS JRSW (Junior Switchable), contain individual antennas (per transmitter) and monitor systems. Due to the tight azimuth / elevation flight inspection tolerances (0.015 degrees) separate AFIS facility databases are developed for each transmitter / antenna pairing.

A3.3 TRUTH SYSTEM. AFIS measures the accuracy of the MSBLS signals using GPS real-time kinematics (RTK) differential technology as truth reference data. RTK differential methods require a GPS reference (base) station, provided by NASA at all MSBLS locations, to send a GPS pseudo range correction to a separate GPS receiver (rover) in the aircraft, which calculates the precise position of the aircraft. The AFIS NCU provides continuous real-time MSBLS error without any TVPS or pilot runway updates. Current status of the DGPS truth system is available in the "SYS-P" field of the AFIS software's MSBLS Graphics Display page. "**Fixed RTK" mode is required for all MSBLS flight inspection, with the following exceptions; momentary status changes to "Float RTK" are permissible on radial and arc flight inspection**. **If Fixed RTK mode cannot be achieved and maintained, the flight inspection shall be terminated.**

A3.4 LIMITATIONS. MSBLS flight inspection is limited to fair weather conditions. Due to the 15 GHZ operating frequency, precipitation may affect the MSBLS signal propagation. Turbulence and radical aircraft movement may also affect the flight inspection results.

a. Report any of these weather-related conditions to the on-site NASA Navaids engineer who will make the ultimate decision to continue or terminate the flight inspection.

b. The aircraft's weather radar adversely affects the MSBLS receiver due to the proximity of the weather radar antenna to the aircraft's MSBLS antennas, and the 4 GHZ frequency of the radar. **The weather radar must be in standby mode during all MSBLS flight inspection profiles, and the MSBLS NAVSET must remain off on all other occasions when the weather radar is active.**

A3.5 PROCEDURES

a. The MSBLS AFIS flight inspection mode, as installed on the Challenger 601 aircraft, operates in a graphical environment. This environment, developed specifically for MSBLS flight inspection, integrates Windows based graphics and Ethernet real-time data into console generated displays. The MSBLS Graphics Display page contains:

(1) A top panel that displays navigational data, facility data, MSBLS receiver monitor data, and profile setup parameters.

(2) The NAPLPS display area (white background) which plots the MSBLS signal strengths and azimuth, elevation, and DME errors.

(3) A selection of "macro" buttons on the right side of the page that provides all the utility functions needed to perform the flight inspection. This macro setup eliminates the need for dedicated keyboard "hotkeys;" to start/stop a run, select other pages, or setup MSBLS flight inspection profiles.

b. On the MSBLS/ DGPS Control Box manually press the MSBLS and DGPS power switches.

c. AFIS Self-Test Procedures. The MSBLS self test function is not functional with the current revision of software. During the AFIS preflight check, the display will show a failed indication. An alternate procedure has been developed to ensure the MSBLS flight inspection system is operational. The first step requires Mission Specialist input. The second is a built-in failsafe that requires no input.

(1) Prior to any flight inspection mission, ensure the AGC or Signal Strength (SS) of the Azimuth, Elevation, and DME MSBLS data parameters is displayed on the Graphics page. This step ensures that the MSBLS flight inspection system is usable (i.e., receiver and data converter are functional; AFIS is decoding and displaying data correctly).

(2) During MSBLS flight inspection operations, the MSBLS receiver’s Functional Status Word (FSW 1) is constantly internally monitored for system status and health. Any receiver fault detected in FSW 1 will be immediately reflected by a cessation of displayed MSBLS data. If data is being displayed on the MSBLS Inspection page, receiver integrity is confirmed and the flight inspection mission can continue.

d. AFIS set-up for a MSBLS flight inspection is as follows:

(1) With Windows opened on the Miltope, double-click the "IFWS Ethernet" ICON that opens the NAPLPS program to the System Service Page.

(2) Select the MSBLS mode

(3) Select the System Setup Page. Verify the following lever arm values:

ACDLN49 = - 7.1
ACDHT09 = +11.7
ACDHT49 = +7.0
ACDLN45 = +11.8
ACDHT05 = + 6.9

(4) Select the DME/Fix Update page. Verify the FINAV mode is "DGPS". **DGPS mode provides RTK differential positioning as a truth source to AFIS only. The selection does not affect aircraft navigation accuracy.**

(5) Select the FI Facility Data page and verify the data matches that on the AVNSIS product. Note the MSBLS IDENT is broken down to a "P" and "B" for primary and backup systems.

MSBLS DATUM HGT = Elevation Datum Point Height

GPS UNDULATION = DGPS Reference Point DELTA-HGT

*All azimuth, elevation, and DME references pertain to primary or backup antenna measurements, **not** the datum point measurements.*

(6) Select the Graphics button to open the MSBLS Graphics Display Page.

(7) Select the Profile button to choose from a list of "canned" radials, arcs, and approaches. Note all the profiles used on commissioning and periodic inspections are "canned". Changes in altitude, distance, or azimuth / elevation tracks may be hand-loaded on the profile page. **All profiles must be executed from the Profile page.**

(8) Begin the run using the Start button. All runs auto-stop based on the parameters entered via the Profile page. This feature works well on arcs and radials, however the approaches will not auto-stop at threshold as required by some approach profiles. The Stop button is then used. MSBLS antenna selection is done via the AFIS software, with the nose antenna used on all approaches and radials, left antenna used on counter-clockwise arcs, and the right antenna used for clockwise arcs.

(9) Select the Print button to screen-print the Graphics Display Page to the inkjet printer.

The RMS 33 is not used for MSBLS flight inspection.

e. Each time a manual stop or auto-stop is processed the measured data is automatically sent to a Flight Inspection Summary page. The "as left" results are then selected by the Mission Specialist from the Summary page and included on a Flight Inspection Report page which represents the final report to NASA. The reported MSBLS errors are accumulated from all

sample points measured during the inspection. Average azimuth, elevation, and DME error is reported on the Final Report Page. The Summary and Flight Inspection Report pages tabulate that data at the bottom of each page, which affords the flight inspector real-time accumulated error.

f. The aircraft's auto-pilot cannot couple to the MSBLS signal. All flight inspection profiles are to be flown via RNAV routes developed from predetermined waypoints stored on FMS media. Close coordination between the Mission Specialist and pilot is essential for precise aircraft placement. The only FIS information available to the pilot is the profile selected, present position, and the results of the run.

g. The MSBLS results may be altered to eliminate extraneous information, i.e., elevation signal unusable but the azimuth was satisfactory, via data markers on the graphics display page. When any data is excluded, the plots and all results on the Graphics Display page remain unchanged, however the Summary page that is used to compute the overall error will be altered accordingly. Various subroutines are available on the MSBLS software, including the capability to overlay several error plots and recreate error plots. Consult T.I. 4040.55 and 56 for more detailed graphics functions.

h. All data shall be logged using the PCMIA card reader. The recorded media is to be retained for archiving purposes. In the MSBLS mode the data automatically logs to the PCMIA reader. Each MSBLS run consumes approximately 5MB of space on the PCMIA media. To ensure data is not lost a blank PCMIA card should be loaded for each runway end.

A3.6 FLIGHT INSPECTION MODES

a. **Arcs.** Manually start the AFIS at 15° of azimuth offset. The AFIS auto-stops the run approximately 13.5° on the other side of system centerline. *Airspeeds of 170 - 250 knots indicated should be used for arc flight.*

b. **Radials.** Manually start the profile. The AFIS auto-stops the run per the stop distance on the Profile page. *Airspeeds of 170 - 200 knots should be used for radial flight.*

c. **Approaches.** Manually start the profile. The AFIS auto-stops the run per the stop distance on the Profile page. Since only 1 approach per transmitter is flown the full length of the runway, the Mission Specialist must manually stop the remaining approaches at the runway threshold. *Use 20° flap settings on the approach and 45° when landing. VREF + 10 knots airspeed for a 20° flap setting should be used.*

A3.7 FMS PROGRAMMING. Graphical depictions and actual site-specific coordinates of waypoints used to program the FMS to fly the MSBLS flight inspection maneuvers, and actual flight inspection checklists will be located on the Airman's Information File (AIF) as soon as possible. Until that time they may be obtained from Flight Inspection Policy. The waypoints are grouped into named routes in the FMS and stored on zip drive media for each MSBLS system.

APPENDIX 4. FREQUENCY SPECTRUM

TABLE OF CONTENTS

Paragraphs *Title* *Pages*

A4.1 FREQUENCY ALLOCATION A4-1

A4.2 NOMENCLATURE OF FREQUENCY BANDS..... A4-3

a. International..... A4-3
b. VHF/ UHF NAVAID Frequency Channeling and Pairing..... A4-3

APPENDIX 4. FREQUENCY SPECTRUM

A4.1 FREQUENCY ALLOCATION

The following is a tabulation of frequencies available for use in the aeronautical, broadcast, and mobile bands. This tabulation may be used as an aid for identifying potential sources of interference. Also included is the VHF/UHF NAVAID Frequency Channeling and Pairing Chart which covers the X and Y channels for TACAN, 50 kHz spacing for VOR and LOC, and 150 kHz GS spacing. The Frequency Management Office can provide additional information regarding users of specific frequencies or bands of frequencies.

FREQUENCY	SERVICE
200-415 kHz	L/ MF radio beacons, ranges, and tower voice (285-325 kHz and 405-415 kHz shared with maritime navigational aids).
1605 kHz-24 mHz	MF/ HF Communications (shared with all services and Goverment/ non-Goverment users).
90 -110 kHz	Loran-C
75m Hz	VHF Marker Beacons
108-118 mHz	ILS Localizer & VOR
118-136 mHz	VHF Communications
162-174 mHz	Relay/ Control of VORTAC
225-328.6 mHz	UHFCommunications
328.6-335.4 mHz	ILS Glide Slope
335.4-400 mHz	UHF Communications
406-420 mHz	Relay/ Control of VORTAC
420-460 mHz	Radio Altimeter
960-1215 mHz	TACAN and DME
1030 mHz and 1090 mHz	ATC Radar Beacon
1215-1400 mHz	Long Range Surveillance Radar
1227.6 mHz	L2 GPS
1435-1535 mHz	Aeronautical Telemetering (Flight Tests)
1535-1542.5 mHz	Maritime Mobile-Satellite
1542.5-1543.5 mHz	Aeronautical Mobile-Satellite (R) and Maritime Mobile-Satellite
1543.5-1558.5 mHz	Aeronautical Mobile-Satellite (R)
1558.5-1636.5 mHz	Aeronautical Radio Navigation
1575.42mHz	L2 Global Positioning System
1636.5-1644 mHz	Maritime Mobile-Satellite
1644-1645 mHz	Aeronautical Mobile-Satellite (R) and Maritime Mobile Satellite
1645-1660 mHz	Aeronautical Mobile Satellite (R)
2700-2900 mHz	Airport Surveillance Radar (shared with meteorological radar).

FREQUENCY	SERVICE
4200-4400 mHz	Radar Altimeter
5000-5250 mHz	Reserved for Aeronautical Radio Navigation and Space Radio Communication
5031 –5090.7 MHz	Microwave Landing System (MLS)
5350-5470 mHz	Airborne Weather Radar
7125-8400 mHz	Microwave Link for Long Range Radar Relay
8800 mHz	Airborne Doppler Radar
9000-9200 mHz	Precision Approach Radar (PAR)
9300-9500 mHz	Airborne Weather Radar
13.25-13.4 gHz	Doppler Navigation Aids
15.4-15.7 gHz	Reserved for Aeronautical Radio Navigation and Space Radio Communications
24.25-24.47 gHz	Airport Surface Detect Radar (ASDE)

Frequency	Broadcast
540-1600 kHz	Standard USA
2300-2495 kHz	Tropical Zone only
2500 kHz	WWV Standard Frequency
3200-3400 kHz	Tropical Zone only
3900-4000 kHz	International (Region 3 only)
3950-4000 kHz	International (Region 1 only)
4750-4995 kHz	Tropical Zone only
5000 kHz	WWV Standard Frequency
5005-5060 kHz	Tropical Zone only
5950-6200 kHz	International
9500-9775 kHz	International
10 mHz	WWV Standard Frequency
11.7-11.975 mHz	International
15 mHz	WWV Standard Frequency
15.1-15.45 mHz	International
17.7-17.9 mHz	International
20 mHz	WWV Standard Frequency
21.45-21.75 mHz	International
25 mHz	WWV Standard Frequency
25.6-26.1 mHz	International
54-72 mHz	Television, VHF
76-88 mHz	Television, VHF
88-108 mHz	FM
174-216 mHz	Television, VHF
470-890 mHz	Television, UHF

A4.2 NOMENCLATURE OF FREQUENCY BANDS

a. International

VLF	Very Low Frequency	0 - 30 kHz
LF	Low Frequency	30 - 300 kHz
MF	Medium Frequency	300 - 3,000 kHz
HF	High Frequency	3,000 - 30,000 kHz
VHF	Very High Frequency	30,000 kHz - 300 mHz
UHF	Ultra High Frequency	300 - 3,000 mHz
SHF	Super High Frequency	3,000 - 30,000 mHz
EHF	Extremely High Frequency	30,000 - 300,000 mHz

The shaded frequencies are, for AFIS use, paired communications frequencies that correspond to the indicated TACAN channel.

b. VHF/ UHF NAVAID FREQUENCY CHANNELING AND PAIRING

							DME AIRBORNE INTERROGATE			DME GND REPLY	
							PULSE CODE				
							NORMAL	P/ DME			
DME CHANNEL NUMBER	----------FREQUENCY--------				MLS CHANNEL NUMBER	FREQ	DME us	IA us	FA us	DME FREQ	PC us
	LOC	GS	VHF/ VOR	MLS							
1X	-	-	134.40	-	-	1025	12	--	--	962	12
1Y	-	-	134.45	-	-	1025	36	--	--	1088	30
2X	-	-	134.50	-	-	1026	12	--	--	963	12
2Y	-	-	134.55	-	-	1026	36	--	--	1089	30
3X	-	-	134.60	-	-	1027	12	--	--	964	12
3Y	-	-	134.65	-	-	1027	36	--	--	1090	30
4X	-	-	134.70	-	-	1028	12	--	--	965	12
4Y	-	-	134.75	-	-	1028	36	--	--	1091	30
5X	-	-	134.80	-	-	1029	12	--	--	966	12
5Y	-	-	134.85	-	-	1029	36	-	-	1092	30
6X	-	-	134.90	-	-	1030	12	-	-	967	12
6Y	-	-	134.95	-	-	1030	36	-	-	1093	30
7X	-	-	135.00	-	-	1031	12	-	-	968	12
7Y	-	-	135.05	-	-	1031	36	-	-	1094	30
8X	-	-	135.10	-	-	1032	12	-	-	969	12
8Y	-	-	135.15	-	-	1032	36	-	-	1095	30
9X	-	-	135.20	-	-	1033	12	-	-	970	12
9Y	-	-	135.25	-	-	1033	36	-	-	1096	30
10X	-	-	135.30	-	-	1034	12	-	-	971	12
10Y	-	-	135.35	-	-	1034	36	-	-	1097	30
11X	-	-	135.40	-	-	1035	12	-	-	972	12
11Y	-	-	135.45	-	-	1035	36	-	-	1098	30
12X	-	-	135.50	-	-	1036	12	-	-	973	12
12Y	-	-	135.55	-	-	1036	36	-	-	1099	30

VHF/ UHF NAVAID FREQUENCY CHANNELING AND PAIRING, CONTINUED

							DME AIRBORNE INTERROGATE			DME GND REPLY	
							PULSE CODE				
							NORMAL	P/ DME			
DME CHANNEL NUMBER	----------FREQUENCY--------				MLS CHANNEL NUMBER	FREQ	DME us	IA us	FA us	DME FREQ	PC us
	LOC	GS	VHF/ VOR	MLS							
13X	-	-	135.60	-	-	1037	12	-	-	974	12
13Y	-	-	135.65	-	-	1037	36	-	-	1100	30
14X	-	-	135.70	-	-	1038	12	-	-	975	12
14Y	-	-	135.75	-	-	1038	36	-	-	1101	30
15X	-	-	135.80	-	-	1039	12	-	-	976	12
15Y	-	-	135.85	-	-	1039	36	-	-	1102	30
16X	-	-	135.90	-	-	1040	12	-	-	977	12
16Y	-	-	135.95	-	-	1040	36	-	-	1103	30
17X	-	-	108.00	-	-	1041	12	-	-	978	12
17Y	-	-	108.05	5043.0	540	1041	36	36	42	1104	30
18X	108.10	334.70		5031.0	500	1042	12	12	18	979	12
18Y	108.15	334.55		5043.6	542	1042	36	36	42	1105	30
19X	-	-	108.20	-	-	1043	12	-	-	980	12
19Y	-	-	108.25	-	-	1043	36	36	42	1106	30
20X	108.30	334.10		5031.6	502	1044	12	12	18	981	12
20Y	108.35	333.95		5044.8	546	1044	36	36	42	1107	30
21X	-	-	108.40	-	-	1045	12	-	-	982	12
21Y	-	-	108.45	5045.4	548	1045	36	36	42	1108	30
22X	108.50	329.90		5032.2	504	1046	12	12	18	983	12
22Y	108.55	329.75		5046.0	550	1046	36	36	42	1109	30
23X	-	-	108.60	-	-	1047	12	-	-	984	12
23Y	-	-	108.65	5046.6	552	1047	36	36	42	1110	30
24X	108.70	330.50		5032.8	506	1048	12	12	18	985	12
24Y	108.75	330.35		5047.2	554	1048	36	36	42	1111	30
25X	-	-	108.80	-	-	1049	12	-	-	986	12
25Y	-	-	108.85	5047.8	556	1049	36	36	42	1112	30
26X	108.90	329.30		5033.4	508	1050	12	12	18	987	12
26Y	108.95	329.15		5048.4	558	1050	36	36	42	1113	30
27X	-	-	109.00	-	-	1051	12	-	-	988	12
27Y	-	-	109.05	5049.0	560	1051	36	36	42	1114	30
28X	109.10	331.40		5034.0	510	1052	12	12	18	989	12
28Y	109.15	331.25		5049.6	562	1052	36	36	42	1115	30
29X	-	-	109.20	-	-	1053	12	-	-	990	12
29Y	-	-	109.25	5050.2	564	1053	36	36	42	1116	30
30X	109.30	332.00		5034.6	512	1054	12	12	18	991	12
30Y	109.35	331.85		5050.8	556	1054	36	36	42	1117	30
31X	-	-	109.40	-	-	1055	12	-	-	992	12
31Y	-	-	109.45	5051.4	568	1055	36	36	42	1118	30
32X	109.50	332.60		5035.2	514	1056	12	12	18	993	12
32Y	109.55	332.45		5052.0	570	1056	36	36	42	1119	30
33X	-	-	109.60	-	-	1057	12	-	-	994	12
33Y	-	-	109.65	5052.6	572	1057	36	36	42	1120	30
34X	109.70	333.20	-	5035.8	516	1058	12	12	18	995	12
34Y	109.75	333.05	-	5035.2	574	1058	36	36	42	1121	30

VHF/ UHF NAVAID FREQUENCY CHANNELING AND PAIRING, CONTINUED

							DME AIRBORNE INTERROGATE			DME GND REPLY	
							PULSE CODE				
							NORMAL	P/ DME			
DME CHANNEL NUMBER	----------FREQUENCY--------				MLS CHANNEL NUMBER	FREQ	DME us	IA us	FA us	DME FREQ	PC us
	LOC	GS	VHF/ VOR	MLS							
35X	-	-	109.80	-	-	1059	12	-	-	996	12
35Y	-	-	109.85	5053.8	576	1059	36	36	42	1122	30
36X	109.90	333.80		5036.4	518	1060	12	12	18	997	12
36Y	109.95	333.65		5054.4	578	1060	36	36	42	1123	30
37X	-	-	110.00	-	-	1061	12	-	-	998	12
37Y	-	-	110.05	5055.0	580	1061	36	36	42	1124	30
38X	110.10	334.40		5037.0	520	1062	12	12	18	999	12
38Y	110.15	334.25									
39X	-	-	110.20	-	-	1063	12	-	-	1000	12
39Y	-	-	110.25	5056.2	584	1063	36	36	42	1126	30
40X	110.30	335.00		5037.6	522	1064	12	12	18	1001	12
40Y	110.35	334.85		5056.8	586	1064	36	36	42	1127	30
41X	-	-	110.40	-	-	1065	12	-	-	1002	12
41Y	-	-	110.45	5057.4	588	1065	36	36	42	1128	30
42X	110.50	329.60		5038.2	524	1066	12	12	18	1003	12
42Y	110.55	329.45		5058.0	590	1066	36	36	42	1129	30
43X	-	-	110.60	-	-	1067	12	-	-	1004	12
43Y	-	-	110.65	5058.6	592	1067	36	36	42	1130	30
44X	110.70	330.20		5038.8	526	1068	12	12	18	1005	12
44Y	110.75	330.05		5059.2	594	1068	36	36	42	1131	30
45X	-	-	110.80	-	-	1069	12	-	-	1006	12
45Y	-	-	110.85	5059.8	596	1069	36	36	42	1132	30
46X	110.90	330.80		5039.4	528	1070	12	12	18	1007	12
46Y	110.95	330.65		5060.4	598	1070	36	36	42	1133	30
47X	-	-	111.00	-	-	1071	12	-	-	1008	12
47Y	-	-	111.05	5061.0	600	1071	36	36	42	1134	30
48X	111.10	331.70		5040.0	530	1072	12	12	18	1009	12
48Y	111.15	331.55		5061.6	602	1072	36	36	42	1135	30
49X	-	-	111.20	-	-	1073	12	-	-	1010	12
49Y	-	-	111.25	6062.2	604	1073	36	36	42	1136	30
50X	111.30	332.30		5040.6	532	1074	12	12	18	1011	12
50Y	111.35	332.15		5062.8	606	1074	36	36	42	1137	30
51X	-	-	111.40	-	-	1075	12	-	-	1012	12
51Y	-	-	111.45	5063.4	608	1075	36	36	42	1136	30
52X	111.50	332.90		5041.2	534	1076	12	12	18	1013	12
52Y	111.55	332.75		5064.0	610	1076	36	36	42	1139	30
53X	-	-	111.60	-	-	1077	12	-	-	1014	12
53Y	-	-	111.65	5064.4	612	1077	36	36	42	1140	30
54X	111.70	333.50		5041.8	536	1078	12	12	18	1015	12
54Y	111.75	333.35		5065.2	614	1078	36	36	42	1141	30
55X	-	-	111.80	-	-	1079	12	-	-	1016	12
55Y	-	-	111.85	5065.8	616	1079	36	36	42	1142	30

VHF/ UHF NAVAID FREQUENCY CHANNELING AND PAIRING, CONTINUED

							DME AIRBORNE INTERROGATE			DME GND REPLY	
							PULSE CODE				
							NORMAL	P/ DME			
DME CHANNEL NUMBER	----------FREQUENCY--------				MLS CHANNEL NUMBER	FREQ	DME us	IA us	FA us	DME FREQ	PC us
	LOC	GS	VHF/ VOR	MLS							
56X	111.90	331.10		5042.4	538	1080	12	12	18	1017	12
56Y	111.95	330.95		5066.4	618	1080	36	36	42	1143	30
57X	-	-	112.00	-	-	1081	12	-	-	1018	12
57Y	-	-	112.05	-	-	1081	36	-	-	1144	30
58X	-	-	112.10	-	-	1082	12	-	-	1019	12
58Y	-	-	112.15	-	-	1082	36	-	-	1145	30
59X	-	-	112.20	-	-	1083	12	-	-	1020	12
59Y	-	-	112.25	-	-	1083	36	-	-	1146	30
60X	-	-	133.30	-	-	1084	12	-	-	1021	12
60Y	-	-	133.35	-	-	1084	36	-	-	1147	30
61X	-	-	133.40	-	-	1085	12	-	-	1022	12
61Y	-	-	133.45	-	-	1085	36	-	-	1148	30
62X	-	-	133.50	-	-	1086	12	-	-	1023	12
62Y	-	-	133.55	-	-	1086	36	-	-	1149	30
63X	-	-	133.60	-	-	1087	12	-	-	1024	12
63Y	-	-	133.65	-	-	1087	36	-	-	1150	30
64X	-	-	133.70	-	-	1088	12	-	-	1151	12
64Y	-	-	133.75	-	-	1088	36	-	-	1025	30
65X	-	-	133.80	-	-	1089	12	-	-	1152	12
65Y	-	-	133.85	-	-	1089	36	-	-	1026	30
66X	-	-	133.90	-	-	1090	12	-	-	1153	12
66Y	-	-	133.95	-	-	1090	36	-	-	1027	30
67X	-	-	134.00	-	-	1091	12	-	-	1154	12
67Y	-	-	134.05	-	-	1091	36	-	-	1028	30
68X	-	-	134.10	-	-	1092	12	-	-	1155	12
68Y	-	-	134.15	-	-	1092	36	-	-	1029	30
69X	-	-	134.20	-	-	1093	12	-	-	1156	12
69Y	-	-	134.25	-	-	1093	36	-	-	1030	30
70X	-	-	112.30	-	-	1094	12	-	-	1157	12
70Y	-	-	112.35	-	-	1094	36	-	-	1031	30
71X	-	-	112.40	-	-	1095	12	-	-	1158	12
71Y	-	-	112.45	-	-	1095	36	-	-	1032	30
72X	-	-	112.50	-	-	1096	12	-	-	1159	12
72Y	-	-	112.55	-	-	1096	36	-	-	1033	30
73X	-	-	112.60	-	-	1097	12	-	-	1160	12
73Y	-	-	112.65	-	-	1097	36	-	-	1034	30
74X	-	-	112.70	-	-	1098	12	-	-	1161	12
74Y	-	-	112.75	-	-	1098	36	-	-	1035	30
75X	-	-	112.80	-	-	1099	12	-	-	1162	12
75Y	-	-	112.85	-	-	1099	36	-	-	1036	30

VHF/ UHF NAVAID FREQUENCY CHANNELING AND PAIRING, CONTINUED

							DME AIRBORNE INTERROGATE			DME GND REPLY	
							PULSE CODE				
							NORMAL	P/ DME			
DME CHANNEL NUMBER	----------FREQUENCY-------- LOC	GS	VHF/ VOR	MLS	MLS CHANNEL NUMBER	FREQ	DME us	IA us	FA us	DME FREQ	PC us
76X	-	-	112.90	-	-	1100	12	-	-	1163	12
76Y	-	-	112.95	-	-	1100	36	-	-	1037	30
77X	-	-	113.00	-	-	1101	12	-	-	1164	12
77Y	-	-	113.05	-	-	1101	36	-	-	1038	30
78X	-	-	113.10	-	-	1102	12	-	-	1165	12
78Y	-	-	113.15	-	-	1102	36	-	-	1039	30
79X	-	-	113.20	-	-	1103	12	-	-	1166	12
79Y	-	-	113.25	-	-	1103	36	-	-	1040	30
80X	-	-	113.30	-	-	1104	12	-	-	1167	12
80Y	-	-	113.35	5067.0	620	1104	36	36	42	1041	30
81X	-	-	113.40	-	-	1105	12	-	-	1168	12
81Y	-	-	113.45	5067.6	622	1105	36	36	42	1042	30
82X	-	-	113.50	-	-	1106	12	-	-	1169	12
82Y	-	-	113.55	5068.2	624	1106	36	36	42	1043	30
83X	-	-	113.60	-	-	1107	12	-	-	1170	12
83Y	-	-	113.65	5068.8	626	1107	36	36	42	1044	30
84X	-	-	113.70	-	-	1108	12	-	-	1171	12
84Y	-	-	113.75	5069.4	628	1108	36	36	42	1045	30
85X	-	-	113.80	-	-	1109	12	-	-	1172	12
85Y	-	-	113.85	5070.0	630	1109	36	36	42	1046	30
86X	-	-	113.90	-	-	1110	12	-	-	1173	12
86Y	-	-	113.95	5070.6	632	1110	36	36	42	1047	30
87X	-	-	114.00	-	-	1111	12	-	-	1174	12
87Y	-	-	114.05	5071.2	634	1111	36	36	42	1048	30
88X	-	-	114.10	-	-	1112	12	-	-	1175	12
88Y	-	-	114.15	5071.8	636	1112	36	36	42	1049	30
89X	-	-	114.20	-	-	1113	12	-	-	1176	12
89Y	-	-	114.25	5072.4	638	1113	36	36	42	1050	30
90X	-	-	114.30	-	-	1114	12	-	-	1177	12
90Y	-	-	114.35	5073.0	640	1114	36	36	42	1051	30
91X	-	-	114.40	-	-	1115	12	-	-	1178	12
91Y	-	-	114.45	5073.6	642	1115	36	36	42	1052	30
92X	-	-	114.50	-	-	1116	12	-	-	1179	12
92Y	-	-	114.55	5074.2	644	1116	36	36	42	1053	30
93X	-	-	114.60	-	-	1117	12	-	-	1180	12
93Y	-	-	114.65	5074.8	646	1117	36	36	42	1054	30
94X	-	-	114.70	-	-	1118	12	-	-	1181	12
94Y	-	-	114.75	5075.4	648	1118	36	36	42	1055	30
95X	-	-	114.80	-	-	1119	12	-	-	1182	12
95Y	-	-	114.85	5076.0	650	1119	36	36	42	1056	30

VHF/ UHF NAVAID FREQUENCY CHANNELING AND PAIRING, CONTINUED

							DME AIRBORNE INTERROGATE			DME GND REPLY	
							PULSE CODE				
							NORMAL	P/ DME			
DME CHANNEL NUMBER	----------FREQUENCY-------- LOC	GS	VHF/ VOR	MLS	MLS CHANNEL NUMBER	FREQ	DME us	IA us	FA us	DME FREQ	PC us
96X	-	-	114.90	-	-	1120	12	-	-	1183	12
96Y	-	-	114.95	5076.6	652	1120	36	36	42	1057	30
97X	-	-	115.00	-	-	1121	12	-	-	1184	12
97Y	-	-	115.05	5077.2	654	1121	36	36	42	1058	30
98X	-	-	115.10	-	-	1122	12	-	-	1185	12
98Y	-	-	115.15	5077.8	656	1122	36	36	42	1059	30
99X	-	-	115.20	-	-	1123	12	-	-	1186	12
99Y	-	-	115.25	5078.4	658	1123	36	36	42	1060	30
100X	-	-	115.30	-	-	1124	12	-	-	1187	12
100Y	-	-	115.35	5079.0	660	1124	36	36	42	1061	30
101X	-	-	115.40	-	-	1125	12	-	-	1188	12
101Y	-	-	115.45	5079.6	662	1125	36	36	42	1062	30
102X	-	-	115.50	-	-	1126	12	-	-	1189	12
102Y	-	-	115.55	5050.2	664	1126	36	36	42	1063	30
103X	-	-	115.60	-	-	1127	12	-	-	1190	12
103Y	-	-	115.65	5080.8	666	1127	36	36	42	1064	30
104X	-	-	115.70	-	-	1128	12	-	-	1191	12
104Y	-	-	115.75	5081.4	668	1128	36	36	42	1065	30
105X	-	-	115.80	-	-	1129	12	-	-	1192	12
105Y	-	-	115.85	5082.0	670	1129	36	36	42	1066	30
106X	-	-	115.90	-	-	1130	12	-	-	1193	12
106Y	-	-	115.95	5082.6	672	1130	36	36	42	1067	30
107X	-	-	116.00	-	-	1131	12	-	-	1194	12
107Y	-	-	116.05	5083.2	674	1131	36	36	42	1068	30
108X	-	-	116.10	-	-	1132	12	-	-	1195	12
108Y	-	-	116.15	5083.8	676	1132	36	36	42	1069	30
109X	-	-	116.20	-	-	1133	12	-	-	1196	12
109Y	-	-	116.25	5084.4	678	1133	36	36	42	1070	30
110X	-	-	116.30	-	-	1134	12	-	-	1197	12
110Y	-	-	116.35	5085.0	680	1134	36	36	42	1071	30
111X	-	-	116.40	-	-	1135	12	-	-	1198	12
111Y	-	-	116.45	5085.6	682	1135	36	36	42	1072	30
112X	-	-	116.50	-	-	1136	12	-	-	1199	12
112Y	-	-	116.55	5086.2	684	1136	36	36	42	1073	30
113X	-	-	116.60	-	-	1137	12	-	-	1200	12
113Y	-	-	116.65	5086.8	686	1137	36	36	42	1074	30
114X	-	-	116.70	-	-	1138	12	-	-	1201	12
114Y	-	-	116.75	5087.4	688	1138	36	36	42	1075	30
115X	-	-	116.80	-	-	1139	12	-	-	1202	12
115Y	-	-	116.85	5088.0	690	1139	36	36	42	1076	30

VHF/ UHF NAVAID FREQUENCY CHANNELING AND PAIRING, CONTINUED

							DME AIRBORNE INTERROGATE			DME GND REPLY	
							PULSE CODE				
							NORMAL	P/ DME			
DME CHANNEL NUMBER	----------FREQUENCY--------				MLS CHANNEL NUMBER	FREQ	DME us	IA us	FA us	DME FREQ	PC us
	LOC	GS	VHF/ VOR	MLS							
116X	-	-	116.90	-	-	1140	12	-	-	1203	12
116Y	-	-	116.95	5088.6	692	1140	36	36	42	1077	30
117X	-	-	117.00	-	-	1141	12	-	-	1204	12
117Y	-	-	117.05	5089.2	694	1141	36	36	42	1078	30
118X	-	-	117.10	-	-	1142	12	-	-	1205	12
118Y	-	-	117.15	5089.8	696	1142	36	36	42	1079	30
119X	-	-	117.20	-	-	1143	12	-	-	1206	12
119Y	-	-	117.25	5090.4	698	1143	36	36	42	1080	30
120X	-	-	117.30	-	-	1144	12	-	-	1207	12
120Y	-	-	117.35	-	-	1144	36	-	-	1081	30
121X	-	-	117.40	-	-	1145	12	-	-	1208	12
121Y	-	-	117.45	-	-	1145	36	-	-	1082	30
122X	-	-	117.50	-	-	1146	12	-	-	1209	12
122Y	-	-	117.55	-	-	1146	36	-	-	1083	30
123X	-	-	117.60	-	-	1147	12	-	-	1210	12
123Y	-	-	117.65	-	-	1147	36	-	-	1084	30
124X	-	-	117.70	-	-	1148	12	-	-	1211	12
124Y	-	-	117.75	-	-	1148	36	-	-	1085	30
125X	-	-	117.80	-	-	1149	12	-	-	1212	12
125Y	-	-	117.85	-	-	1149	36	-	-	1086	30
126X	-	-	117.90	-	-	1150	12	-	-	1213	12
126Y	-	-	117.95	-	-	1150	36	-	-	1087	30

APPENDIX 5. MAP INTERPRETATION

TABLE OF CONTENTS

Paragraphs	*Title*	*Pages*
A5.1	INTRODUCTION	A5-1
A5.2	AERONAUTICAL CHART PREPARATION	A5-1
A5.3	PREPARATION OF CHARTS FOR FLIGHT INSPECTION USE	A5-3
A5.4	USE OF THE CHART	A5-4

APPENDIX 5. MAP INTERPRETATION

A5.1 Introduction

a. Aeronautical charts normally used for checkpoint orbit checks have substantial effect on the data processing center. Through the cooperation of the United States Coast and Geodetic Survey, certain information concerning aeronautical charts has been collected. Coast and Geodetic Survey personnel have accompanied flight crews on orbit type checks. Outlined here is information considered helpful in improving the accuracy of flight inspection results, with particular reference to chart construction, design, and preparation for flight inspection use, checkpoint selection, etc.

b. The use of state highway maps or county maps is not recommended if aeronautical charts are available, as there is considerable variation in the accuracy of the maps among various states and counties.

c. It has been determined, however, that the **Defense Mapping Agency Series 1501, Joint Operations Graphics,** although not aeronautical charts, are satisfactory for flight inspection use. Due to the scale of these maps (1 to 250,000), greater detail is available than that displayed by the sectional charts; consequently more definable checkpoints can be utilized.

d. The positions of many facility sites have been determined by first-order triangulation or photogrammetric methods with a high degree of accuracy. Before recommending that coordinates of a facility be changed, the Coast and Geodetic Survey should be contacted for verification of such a change.

A5.2 Aeronautical Chart Preparation

a. In congested areas of the Nation, checkpoints are plentiful, and it is possible to select only the most desirable. In sparsely settled areas, it may be necessary to use every feature appearing on the chart in order to obtain a maximum of 8 or 10 checkpoints. For these reasons, it is helpful to have an understanding of the manner in which final drawings for aeronautical charts are made.

b. The preparation of final drawings for charts using three separate colors is made as follows:

(1) Black. Includes railroads, roads (these are sketched in black, but photograph gray on final chart), city and town symbols, boundaries, dots showing the location of spot heights, landmark symbols, etc.

(2) Blue. Drainage.

(3) Brown. Contours.

c. In order to provide satisfactory clearances between various features, it is often necessary to shift some away from their correct geographic positions. This shift does not usually amount to more than 1/32 of an inch on the printed chart, but it is often required for increased clarity and legibility of the chart. In shifting, two general conditions are to be met:

(1) All possible detail in the relative position of the features is retained as closely as possible.

(2) The geographic position of the combination of features is retained as closely as possible.

d. For example, in case of a road paralleling a railroad for a short distance, the railroad is drawn in its true geographic position, and the road is displaced enough to provide the required clearance. If both were displaced by equal amounts, as first might be suspected, a curve that is nonexistent in fact would have to be introduced into the railroad or the railroad would have to be displaced for some little distance on either side, with consequent displacement of towns and other features along the railroad.

e. Similarly, if a road parallels the railroad for a short distance, then crosses and again parallels the railroad on the other side, the railroad should be shown in its correct position and the road displaced as before.

f. Further, there are conditions where a road may parallel a railroad for a short distance, and both may be displaced by an amount equal to one-half the required clearance.

g. In general, it has been found that a railroad should be held in its correct position first, a road second, and stream last. That is, between a railroad and a highway or stream, the latter are usually shifted; between a road and a stream, the stream is displaced.

h. If a stream flows between a road and a railroad, or between two railroads, *the stream retains its true position* and other features are displaced. As a rule, all town and city symbols are affixed in their correct positions. Since railroads and towns are usually held in their correct positions, other features are adjusted to them. Landmarks such as oil derricks, race-tracks, etc., should be used only as a last resort.

i. Since each color on a printed chart is a separate sheet, the registration of the colors may be checked at the "neat line" at each corner of the chart. The color which is not correct can be identified by the color tick. If a color is too far from correct registration, several charts should be examined and an effort made to obtain one that is more accurate.

A5.3 Preparation of Charts for Flight Inspection Use. In preparing a chart for a flight inspection, the following procedure is outlined.

a. The *exact* latitude and longitude of the facility should be plotted on the chart as follows:

(1) Plot the longitude on parallels, which are subdivided into 1-minute intervals, north and south of the station, then draw a fine line connecting these two points and extend the line far enough in both directions to fit a large protractor. This will be the true north reference. The latitude should be scaled, using hairspring dividers, from the parallel below the site along the nearest meridian, subdivided into 1-minute -intervals, and then be transferred to the true north reference where it intersects the same parallel. Because of curvature in the parallels, this procedure will be far more accurate than measuring the latitude on each side of the site and then drawing a line between the two points of latitude.

(2) If two or more charts must be joined together, such as Kansas City and Des Moines for the St. Joseph VOR, it is suggested that the following method be used: Select one of the charts which will be used to plot the correct position of the VOR and use it as the overlay chart. For example, the correct position of the STJ VOR is to be plotted on the Kansas City chart. Place a straight edge on the intersection of north lat. 40° 05'00" and 94° 00'00" west long. Draw a *straight line* between these two points. The use of a razor blade for cutting along a straight edge is preferred. This chart will be mounted on the Des Moines chart by correctly aligning the central meridian of 95° 00'00" and placing the two points mentioned above in their correct position. The slight difference in the size of the two charts will fall away from the central meridian and allow the minimum error near the station. If it is necessary to join four charts together, it is suggested that the two north charts be mounted on the two south charts to form the east and west half, then the east and west sections may be mounted along a meridian such as 96° 00'00" ,making sure that the 40° parallel is in correct alignment and that the 96th meridian is in a straight line.

(3) The magnetic north reference may not be plotted from the facility location with magnetic variation interpolated from the lines of magnetic variation shown on the chart. The determination of the correct magnetic variation is extremely important. Whenever possible, the magnetic variation should be obtained from the latest information available through the Coast and Geodetic Survey. If the available information is not up to date, the annual rate of change in variation should be applied. It is conceivable that errors as great as 0.5° may occur if proper determination of magnetic variation is not made through use of the latest and most accurate source of this information.

(4) After the magnitude of magnetic variation has been determined, it is suggested that this be plotted on the chart using at least a 6-inch circular protractor and marking it from the true north reference, both north and south of the site and connecting the two points with a fine line which passes directly through the site. The 90° to 270° magnetic lines may be marked by resetting the protractor on the magnetic north reference.

A5.4 Use of the Chart

a. In the selection of checkpoints, black should be used first, gray second, and blue (drainage) last. Only in rare cases will be the facility site be accurately located. Consequently, the facility location should always be plotted as outlined above.

b. One good checkpoint each 30° provides more repeatable results (provided constant radius is maintained) than large numbers of checkpoints using all types of map information.

c. If the same chart is used over an extended period of time, it may be necessary to realign the magnetic north reference line due to annual change in the variation. This is particularly true in some areas where the annual rate of change is extraordinary.

APPENDIX 6. UHF HOMING BEACONS

TABLE OF CONTENTS

Paragraph	*Title*	*Page*
A6.1	INTRODUCTION	A6-1
A6.2	PREFLIGHT REQUIREMENTS	A6-1
A6.3	FLIGHT INSPECTION PROCEDURES	A6-2
A6.4	ANALYSIS	A6-4

APPENDIX 6. UHF HOMING BEACONS

A6.1 INTRODUCTION

a. The UHF Homing Beacon (AN/ URN-12) ground station transmits a continuous carrier in the frequency range of 275 to 287 megacycles, modulated with a 1,020-cycle tone for identification purposes. The power output is approximately 15 watts.

b. The pilot of an aircraft equipped with the AN/ARA-25 or similar equipment can determine the relative bearing of, and "home" on, the facilities maintenance equipment. The airborne equipment extracts the information from signals received by the AN/ARC-27 or similar UHF communications receiver. The relative bearing of the signal source is indicated on a course indicator. Best results are obtained under straight and level flight conditions.

A6.2 PREFLIGHT REQUIREMENTS

a. Facilities maintenance personnel should prepare for flight inspection in accordance with procedures outlined in FAA Order 8200.1, Chapter 4.

b. Air. The flight inspector will prepare for the flight inspection in accordance with procedures outlined in FAA Order 8200.1, Chapter 4. In addition to the above preparations, the flight inspector will:

(1) Be sure that an approved type of airborne equipment is installed and has been calibrated and aligned in accordance with current FAA directives.

(2) For commissioning, use a suitable chart, scale 1:500,000 or greater, to plot the exact location of the facility. Plot a series of checkpoints spaced approximately 45° apart at a radius between 20 and 30 nm from the station. Determine the primary air routes that are served by the facility and plot the routes on the chart. Select two courses for a long-distance check. Note: These two courses may be extensions of the primary air routes previously selected, but should be at least 45° apart.

A6.3 FLIGHT INSPECTION PROCEDURES. The primary object of the flight inspection is to determine the coverage and quality of the transmitted signal; therefore, it is necessary that the aircraft be flown through normal usage patterns and procedures to determine the usability of the facility and to ensure that the homing beacon meets the operational requirements for which it was installed.

a. Detailed Procedures

(1) Station Identification. Select the proper frequency and check for correct identification and tone of the signal. Any discrepancies noted should be reported to maintenance personnel for corrective action before continuing the flight inspection. Note any frequency interference from other stations.

(2) Bearing Accuracy. Check bearing accuracy against AFIS, GPS, or map reference at least at one point in the service volume, preferably on a published procedure. Fly at minimum instrument altitudes or at an altitude to ensure adequate signal strength.

(3) Voice. If the facility is equipped with voice feature, this feature should be checked at maximum usable distance. It will be noted that most types of airborne equipment will require the receiver function selector to be placed in the RECEIVE position to receive voice transmissions. Request a long voice transmission and note the voice quality, modulation, and freedom from interference. In the event voice transmissions do not reach the maximum usable range, return inbound until they can be received satisfactorily. Record this distance on the flight inspection report.

(4) Coverage

(a) Proceed outbound along one of the primary air routes at minimum instrument altitude until reaching 45 nm or until any out-of-tolerance condition is observed. This position will be the usable distance. Upon completion of the investigation of the first route, proceed to the remaining routes and repeat the above procedures.

(b) During the check, observe the surrounding terrain and note the location of terrain, or other obstructions that may prevent line-of-sight transmissions to an area beyond the obstructions. Reflections of radio signals, or shadow effect, caused by the intervening terrain, or other obstacles, may result in bearing errors or loss of usable signal.

(c) If areas of weak signal are encountered or if terrain obstructions exist, investigate the areas in question and record the areas checked, location of apparent obstructions, and the minimum altitude and distance at which a usable signal can be received.

(d) For periodic inspections, check coverage from 45 nm at minimum en route altitude until intercepting the approach procedure.

(5) Long-Distance Check. Proceed outbound along one of the air routes or courses selected to a distance of 100 nm at an altitude of 10,000 ft. Observe and record the extent of the pilot's direction indicator needle oscillation, AGC, and the station identification. Then proceed to the other air route or selected course at the 100-mile range and fly inbound along this route to the facility site, again noting the identification, AGC, and needle oscillation.

(6) Standard Instrument Approach Procedure (SIAP). If this facility is to be used as a low approach aid, a low approach will be made for each of the proposed or approved procedures. Check each approach procedure for flyability. Unusual conditions noted will be further investigated. The flight inspector shall follow the procedures for inspection of SIAP's contained in Chapter 214. Altitudes flown shall be the minimum proposed or published for the segment evaluated, except that the final segment shall be flown to 100 ft below the lowest published MDA. The flight inspector shall check to ensure compliance with tolerances in FAA Order 8200.1.

(a) Commissioning Inspection of SIAP. The flight inspector shall evaluate all segments of the proposed procedure.

(b) For a periodic inspection, evaluate the final approach segment of the SIAP.

(7) Station Passage. Fly over the antenna site and note the position where station passage is indicated. The station passage should be indicated by a sharp positive reversal of the pilot's direction indicator needle. No specific tolerances are established for station passage; however, it should be encountered approximately over the facility. Any area where the needle has a tendency to reverse itself before actually passing over the station should be plotted on the chart and reported on the flight inspection report.

(8) Standby Equipment. Standby equipment will be spot-checked to ascertain that it meets the same tolerances as the primary equipment.

A6.4 ANALYSIS

a. From the data obtained during the flight inspection, the flight inspector must determine if there are any areas where the facility fails to meet the coverage and/or bearing tolerance. If such areas were noted during the flight inspection, he should analyze all data to determine if such effects are caused by terrain or equipment. Normally this facility cannot be expected to give reliable information at ranges and altitudes which are below line of sight.

b. The airborne ADF equipment (AN/ARA-25) is an attachment applied to the UHF transceiver to enable it to take bearings on a transmitted signal. While in the ADF position, the ADF antenna seeks a null in the process of presenting a bearing. Under these conditions, very little signal from the transmitter is applied to the UHF transceiver, and tone identification cannot be heard at distances greater than 70 nm, line of sight, but may be heard at shorter distances depending upon the ambient electrical noise level of the airborne ADF system. (The antenna drive mechanism develops a 100-cycle signal that is great enough to blanket the tone identification except at close range to the transmitter.) Continuous switching from the RECEIVE to ADF position must be accomplished in order to monitor both the identification and the ADF indications.

c. The bearing indicator normally hunts plus or minus a few degrees of the received bearing when the transmitter is operating satisfactorily. In the absence of a carrier, the bearing indicator usually rotates slowly and continuously over 360° of azimuth, or remains stationary. For this reason, the station must be monitored intermittently in the RECEIVE and ADF position.

APPENDIX 7. RADIO TELEMETER THEODOLITE (RTT) CALIBRATION

TABLE OF CONTENTS

Paragraph *Title* *Page*

A7.1 GENERAL A7-1

A7.2 FLIGHT INSPECTION PROCEDURES A7-1
a. Localizer A7-1
b. Glide Slope A7-3
c. MLS Azimuth A7-5
d. MLS Elevation A7-7

A7.3 SIERRA FLIGHT INSPECTION SYSTEM A7-8
a. Localizer A7-8
b. Glide Slope A7-10

A7.4 MLS A7-12
a. MLS Azimuth A7-12
b. MLS Elevation A7-13

A7.5 QUICK REFERENCE PLOTTER CHART A7-15

APPENDIX 7. RADIO TELEMETER THEODOLITE (RTT) CALIBRATION

A7.1 GENERAL. This capability has been added to allow for special operations when complete facility data is not available or circumstances require RTT use. This procedure should be applied when an RTT is to be used in certifying a NAVAID for operational use.

> **NOTE:** The RTT should be ground tested prior to flight. Set up the RTT with the transmitting antenna facing the nose of the aircraft.

Theory of Operation: The RTT is used as a perfect ILS/ MLS reference to compare against the facility under test. Once the theodolite is manually aligned to either the vertical (commissioned elevation angle) or horizontal (designed procedural course) reference, the RTT transmits a comparable electronic course to the flight inspection aircraft. Any difference between the RTT and the facility crosspointer action will be measured as ILS/ MLS error. The RTT is calibrated to a predetermined sensitivity off-course in order to provide accurate deflection representative of the aircraft's offset from the reference course. The telemetering capability of the RTT system allows measurement of facility error without requiring the aircraft to remain constantly on-course or on-path.

Calibration of the RTT is facility specific and is required for each approach. The airborne calibration is embedded in the aircraft's AFIS software. Analysis of the RTT error plotter trace is entirely manual. The validity of the RTT error can be verified on each run. Observe the deviation of the RTT crosspointer from baseline throughout the approach. The RTT error deflection equals the facility under test's crosspointer deviation subtracted from the RTT deviation.

> **NOTE:** AFIS and RTT operations can be conducted simultaneously.

A7.2 FLIGHT INSPECTION PROCEDURES

a. Localizer:

(1) MISC SERVICE - Select ILS 3 Mode

(2) SYS PLOT – Select RTT DEV, RTT ERROR, and RTT VLD on Page 2

(3) Instruct THEO operator to transmit "0".

(4) I/ O Page

(a) BWD to the RTT Control/ Setup page

(b) TGL RTT Mode to “ILS Localizer”

(c) TGL RTT Calibration to “0”

(d) Execute SPD on “Clear Cal Value?”

(5) Start Plotter

(6) RTT Control/ Setup page

(a) Observe the “Raw RTT Input” value	- Uncorrected RTT output
(b) Execute SPD on “Execute Cal?”	- “Raw RTT Input” indicates 0 - “RTCP” = **5.0** in. on the plotter

(7) Instruct THEO operator to go to ½ localizer course width to the operator’s **left**

- THEO AZ scale = <360°
- RTT TX = negative degrees

(8) RTT Control/ Setup page

(a) TGL RTT Calibration to “150 µA Left”	- Observe the “Raw RTT Input” indicates negative number - Observe the “RTCP” deflects **left**
(b) Execute SPD on “Execute Cal?”	- “Raw RTT Input” indicates -150µA - “RTCP” trace = **2.0** in. on the plotter

(9) Instruct THEO operator to go to ½ localizer course width to the operator’s **right**

- THEO AZ scale = > 360°
- RTT TX = positive degrees

(10) RTT Control/ Setup page

(a) TGL RTT Calibration to, “150 µA Right”	- Observe the “Raw RTT Input” indicates positive number - Observe the “RTCP” trace deflects **right**
(b) Execute SPD on “Execute Cal?”	- “Raw RTT Input” indicates +150µA - “RTCP” trace = **8.0** in. on the plotter

(11) **Print** INSP Page

(12) At this time the RTT system is calibrated and ready for use. Instruct the theo operator to return to “0” to track the aircraft.

(13) Operation

(a) Manually analyze the RTT error trace IAW FAA Order 8200.1, Chapter 15.

(b) Repeat the calibration procedure inbound for each approach.

*(c) The RTT "**VLD**" (RTFG) trace indicates a valid RTT signal by a deflection to **2.7** inches.*

*(d) The RTT "**INVLD**" (RTFG) trace indicates a invalid RTT signal by a deflection to **5.0** inches.*

(e) A left alignment error will be indicated by a right RTT error deflection from the 3 in. baseline.

b. Glide Slope:

(1) MISC SERVICE - Select ILS-3 Mode

(2) SYS PLOT – Select RTT DEV, RTT ERROR, and RTT VLD on Page 2

(3) Instruct THEO operator to transmit “0”.

(4) I/ O Page.

(a) BWD to the RTT Control/ Setup page

(b) TGL RTT Mode to “ILS Glide Slope”

(c) TGL RTT Calibration to “0”

(d) Execute SPD on “Clear Cal Value?”

(5) Start Plotter

(6) RTT Control/ Setup page

(a) Observe the "Raw RTT Input" value	- Uncorrected RTT output
(b) Execute SPD on "Execute Cal?"	- "Raw RTT Input" indicates 0 - "RTCP" = **5.0** in. on the plotter

(7) Instruct THEO operator to go to 0.35° above the reference angle

- THEO EL scale = 0.35° higher than the reference angle)
- RTT TX = +0.35°

(8) RTT Control / Setup page

(a) TGL RTT Calibration to, "75μA Above"	- Observe the "Raw RTT Input" indicates positive number - Observe the "RTCP" deflects **right**
(b) Execute SPD on "Execute Cal?"	- "Raw RTT Input" indicates + 75 μA - "RTCP" trace = **6.5** in. on the plotter

(9) Instruct THEO operator to go to 0.35° below the reference angle

- THEO EL scale = 0.35° lower than the reference angle
- RTT TX = -0.35°

(10) RTT Control/ Setup page

(a) TGL RTT Calibration to, "75 μA Below"	- Observe the "Raw RTT Input" indicates negative number - Observe the "RTCP" deflects **left**
(b) Execute SPD on "Execute Cal?"	- "Raw RTT Input" indicates –75 μA - "RTCP" trace = **3.5** in. on the plotter

(11) **Print** INSP Page

(12) At this time the RTT system is calibrated and ready for use. Instruct the theo operator to return to "0" to track the aircraft.

(13) Operation

(a) *Manually analyze the RTT error trace IAW FAA Order 8200.1, Chapter 15.*

(b) *Repeat the calibration procedure inbound for each approach.*

(c) *The RTT "**VLD**" (RTFG) trace indicates a valid RTT signal by a deflection to **2.7** inches.*

(d) *The RTT "**INVLD**" (RTFG) trace indicates an valid RTT signal by a deflection to **5.0** inches.*

(e) ***A high glide slope angle will be indicated by a right RTT error deflection from the 3 in. baseline***

(f) *Each **0.1 in. deflection = 0.023°** (.35°/ 1.5 in.)*

c. MLS Azimuth:

(1) MISC SERVICE - Select MLS-3 Mode

(2) SYS PLOT - Select RTT DEV, RTT ERROR, and RTT VLD on Page 2.

(3) Instruct THEO operator to transmit "0".

(4) I/ O Page

(a) BWD to the RTT Control/ Setup page

(b) TGL RTT Mode to "MLS Azimuth"

(c) TGL RTT Calibration to "0"

(d) Execute SPD on "Clear Cal Value?"

(5) Start Plotter

(6) RTT Control/ Setup page

(a) Observe the "Raw RTT Input" value	- Uncorrected RTT output
(b) Execute SPD on "Execute Cal?"	- "Raw RTT Input" indicates 0 - "RTCP" = **5.0** in. on the plotter

(7) Instruct THEO operator to go to -1.0° to the operator's **left**

- THEO AZ scale = 359°
- RTT TX = -1.0°

(8) RTT Control/ Setup page

(a) TGL RTT Calibration to, "1° **Left**"	- Observe the "Raw RTT Input" indicates negative number - Observe the "RTCP" deflects **left**
(b) Execute SPD on "Execute Cal?"	- "Raw RTT Input" indicates –1.00° - "RTCP" trace = **4** in. on the plotter

(9) Instruct THEO operator to go to +1.0° to the operator's **right**

- THEO AZ scale = 001°
- RTT TX = +1.0°

(10) RTT Control/ Setup page

(a) TGL RTT Calibration to, "1° **Right**"	- Observe the "Raw RTT Input" indicates a positive number - Observe the "RTCP" deflects **right**
(b) Execute SPD on "Execute Cal?"	- "Raw RTT Input" indicates +1.00° - "RTCP" trace = **6** in. on the plotter

(11) **Print** INSP Page

(12) At this time the RTT system is calibrated and ready for use. Instruct the theo operator to return to "0" to track the aircraft. Manually analyze the RTT error trace IAW FAA Order 8200.1, Chapter 16.

(13) Operation

(a) *Repeat the calibration procedure inbound for each approach. The RTT "**VLD**" (RTFG) trace indicates a valid RTT signal by a deflection to 2.7 inches.*

(b) *The RTT "**INVLD**" (RTFG) trace indicates an invalid RTT signal by a deflection to **5.0** inches.*

(c) ***A left or positive alignment error will be indicated by a left RTT error deflection from the 3 in. baseline.***

(d) *Each **0.1 in. deflection = 0.02°** (.2°/ 1.0 in.)*

d. MLS Elevation:

(1) MISC SERVICE - Select MLS 3 Mode

(2) SYS PLOT - Select RTT DEV, RTT ERROR, and RTT VLD on Page 2.

(3) Instruct THEO operator to transmit “0”.

(4) I/ O Page

(a) BWD to the RTT Control/ Setup page

(b) TGL RTT Mode to “MLS Elevation”

(c) TGL RTT Calibration to “0”

(d) Execute SPD on “Clear Cal Value?”

(5) Start Plotter

(6) RTT Control/ Setup page

(a) Observe the “Raw RTT Input” value	- Uncorrected RTT output
(b) Execute SPD on “Execute Cal?”	- “Raw RTT Input” indicates 0 - “RTCP” = **5.0** in. on the plotter

(7) Instruct THEO operator to go to 1.0° above the reference angle

- THEO EL scale = Reference angle + 1.0°
- RTT TX = +1.0°

(8) RTT Control / Setup page

(a) TGL RTT Calibration to, “1° Above”	- Observe the “Raw RTT Input” indicates positive number - Observe the “RTCP” deflects **right**
(b) Execute SPD on “Execute Cal?”	- “Raw RTT Input” indicates +1.00° - “RTCP” trace = **6.0** in. on the plotter

(9) Instruct THEO operator to go to 1.0° below the reference angle

- THEO EL scale = Reference angle – 1.0°
- RTT TX = -1.0°

(10) RTT Control/ Setup page

(a) TGL RTT Calibration to, “1° Below”	- Observe the “Raw RTT Input” indicates negative number - Observe the “RTCP” deflects **left**
(b) Execute SPD on “Execute Cal?”	- “Raw RTT Input” indicates -1.00° - “RTCP” trace = **4.0** in. on the plotter

(11) **Print** INSP Page

(12) At this time the RTT system is calibrated and ready for use. Instruct the theo operator to return to “0” to track the aircraft. Manually analyze the RTT error trace IAW FAA Order 8200.1, Chapter 16.

(13) Operation

(a) *Repeat the calibration procedure inbound for each approach.*

(b) *The RTT "**VLD**" (RTFG) trace indicates a valid RTT signal by a deflection to **2.7** inches.*

(c) *The RTT "**INVLD**" (RTFG) trace indicates an invalid RTT signal by a deflection to **5.0** inches.*

(d) ***A high elevation angle will be indicated by a left RTT error deflection from the 3 in. baseline***

(e) ***Each 0.1 in. deflection = 0.02° (.2°/ 1.0 in.)***

A7.3 SIERRA FLIGHT INSPECTION SYSTEM

a. Localizer:

(1) Select an ILS-3 profile

(2) Select RTT plots and sensitivity

(a) RTT DEVN

(b) RTT FLAG

(c) RTT/ LOC DIFF

(3) "ENTER" to select "RTT Localizer Calibration"

(4) Select “Perform CAL” - “Two-Point Calibration” screen appears with cursor in the “No Signal Point Calib Value” field

(5) Instruct THEO operator to transmit “0” - Verify a value in the No-Signal Point Measured Value” field

(6) “Enter key - Cursor goes to “Full-scale Point Calib Value” field

(7) Instruct THEO operator to go to ½ localizer course width to the operator's **right**

- THEO AZ scale = > 360°
- RTT TX = positive degrees
- Measured value = positive degrees

(8) "Enter" key

(9) Select the "**Print Screen**" function

(10) "Enter" key

(11) Select "Continue"

(12) "Enter" key

(13) Start the ILS-3 profile

(14) Instruct THEO operator to transmit “0” - RTT DEVN (RDVN) = **7.0** in

(15) Instruct THEO operator to go to ½ localizer course width to the operator's **right**

- THEO AZ scale = > 360°
- RTT TX = positive degrees
- RTT DEVN (RDVN) = **11.0** in.

(16) Instruct THEO operator to go to ½ localizer course width to the operator’s **left**

- THEO AZ scale = < 360°
- RTT TX = negative degrees
- RTT DEVN (RDVN) = **3.0** in.

(17) At this time the RTT system is calibrated and ready for use. Instruct the theo operator to return to “0” to track the aircraft. Manually analyze the RTT error trace IAW FAA Order 8200.1, Chapter 15.

(18) Operation

(a) *Repeat the calibration procedure inbound for each approach.*

(b) *The RTT Flag (RTT) trace indicates a **valid** RTT signal by a deflection to **9.9** inches.*

(c) *A deflection to **12.0** inches indicates an **invalid** RTT signal.*

(d) ***A left alignment error will be indicated by a right RTT error deflection from the 6 in. baseline.***

b. Glide Slope:

(1) Select an ILS-3 profile

(2) Select RTT plots and sensitivity

(a) RTT DEVN

(b) RTT FLAG

(c) RTT/ GLS DIFF

(3) "ENTER" to select "RTT Glide Slope Calibration"

(4) Select “Perform CAL”	- “Two-Point Calibration” screen appears with cursor in the “No Signal Point Calib Value” field
(5) Instruct THEO operator to transmit “0”	- Verify a value in the “No-Signal Point Measured Value” field
(6) “Enter” key	- Cursor goes to “Full-scale Point Calib Value” field

(7) Instruct THEO operator to go to 0.35° above the reference angle

- THEO EL scale = 0.35° higher than the reference angle
- RTT TX = +0.35°
- Measured value = positive degrees

(8) "Enter" key

(9) Select the "**Print Screen**" function

(10) "Enter" key

(11) Select "Continue"

(12) "Enter" key

(13) Start the ILS-3 profile

(14) Instruct THEO operator to transmit “0” - RTT DEVN (RDVN) = **7.0** in.

(15) Instruct THEO operator to go to 0.35° above the reference angle

- THEO EL scale = 0.35° higher than the reference angle)
- RTT TX = +0.35°
- RTT DEVN (RDVN) = **9.0** in.

(16) Instruct THEO operator to go to 0.35° below the reference angle

- THEO EL scale = 0.35° below the reference angle
- RTT TX = -0.35°
- RTT DEVN (RDVN) = **5.0** in.

(17) At this time the RTT system is calibrated and ready for use. Instruct the theo operator to return to “0” to track the aircraft. Manually analyze the RTT error trace IAW FAA Order 8200.1, Chapter 15.

(18) Operation

(a) Repeat the calibration procedure inbound for each approach.

(b) The RTT Flag (RTT) trace indicates a **valid** RTT signal by a deflection to **9.9** inches.

(c) A deflection to **12.0** inches indicates an **invalid** RTT signal.

(d) A high glide slope angle will be indicated by a right RTT error deflection from the 6 in. baseline

(e) Each 0.1 in. deflection = 0.0175° (.35°/ 2.0 in.)

A7.4 MLS. The MLS RTT operation involves the use of the portable MLS flight inspection system as installed as a "stand-alone" non-AFIS system. The following RTT operation assumes the installation of the portable MLS "package" and the initial RMS-33 plotter set-up procedures have been accomplished.

a. MLS Azimuth:

(1) Select MLS-1 profile

(2) RTT CONTROL UNIT;

(a) ON

(b) DISC OFF

(c) CAL OFF

(d) SETUP ON

(e) 75 CAL

(f) AZ

(3) RTT THEO AZ "0"

DVM - RTT	**DVM - DIFF**
- ADJUST RTT ZERO POT	- ADJUST DIFF ZERO POT
- DVM ± .001VOLTS	- DVM ± .001 VOLTS
- RTT **5** in. BASELINE	- RTT **6** in. BASELINE

(4) RTT THEO AZ +1.0°

DVM - RTT	**DVM - DIFF**
- ADJUST RTT GAIN POT	- ADJUST DIFF GAIN POT
- DVM +.075 VOLTS	- DVM -.075 VOLTS
- RTT **2** in. LEFT (RMS)	- DIFF **2** in. RIGHT (RMS)

(5) RTT THEO AZ -1.0°

DVM - RTT	**DVM - DIFF**
- DVM -.075 VOLTS	- DVM +.075 VOLTS
- RTT **2** in. RIGHT (RMS)	- RTT **2** in. LEFT (RMS)

(6) RTT THEO AZ "0"

(7) RTT SETUP OFF

NOTE: DIFF TRACE DEFLECTS LEFT FOR RIGHT MLS MISALIGNMENT .05°/ LL @ 37.5 RMS SENS

Manually analyze the RTT error trace IAW FAA Order 8200.1, Chapter 16.

b. MLS Elevation:

(1) Select MLS-1 profile

(2) RTT CONTROL UNIT

(a) ON

(b) DISC OFF

(c) CAL OFF

(d) SETUP ON

(e) 75 CAL

(f) EL

(3) RTT THEO ELEVATION "0" DDM

DVM - RTT	**DVM - DIFF**
- ADJUST RTT ZERO POT	- ADJUST DIFF ZERO POT
- DVM 0 ± .001 VOLTS	- DVM 0 ± .001 VOLTS
- RTT **5** in. BASELINE	- DIFF **6** in. BASELINE

(4) RTT THEO EL +0.30° (FROM REFERENCE ANGLE)

DVM - RTT	**DVM - DIFF**
- ADJUST RTT GAIN POT	- ADJUST DIFF GAIN POT
- DVM +.060 VOLTS	- DVM -.060 VOLTS
- RTT **1.6** in. LEFT (RMS)	- DIFF **1.6** in. RIGHT (RMS)

(5) RTT THEO EL -0.30° (FROM REFERENCE ANGLE)

DVM - RTT	**DVM - DIFF**
- DVM -.060 VOLTS	- DVM +.060 VOLTS
- RTT **1.6** in. RIGHT (RMS)	- DIFF **1.6** in. LEFT (RMS)

(6) RTT THEO EL "0" DDM

(7) RTT SETUP OFF

NOTE: DIFF TRACE DEFLECTS RIGHT FOR HIGH MLS ANGLE .01875 Deg/ LL @ 37.5 RMS SENS. Other sensitivities may be used. Manually analyze the RTT error trace IAW FAA Order 8200.1, Chapter 16.

A7.5 QUICK REFERENCE PLOTTER CHART

CONDITION	NXT	SIERRA
LOC RTT “0”	RTT CP = 5.0 in.	RTT CP = 7.0 in.
LOC RTT CAL Left	RTT CP = 2.0 in.	RTT CP = 3.0 in.
LOC RTT CAL Right	RTT CP = 8.0 in.	RTT CP = 11.0 in.
Localizer CL	RTT ERR = 3.0 in.	RTT ERR = 6.0 in.
Localizer Misaligned Right	RTT ERR = Left	RTT ERR = Left
Localizer Misaligned Left	RTT ERR = Right	RTT ERR = Right
G/ S RTT "0"	RTT CP = 5.0 in.	RTT CP = 7.0 in.
G/ S RTT CAL Above	RTT CP = 6.5 in.	RTT CP = 9.0 in.
G/ S RTT CAL Below	RTT CP = 3.5 in.	RTT CP = 5.0 in.
"0" G/ S Angle Error	RTT ERR = 3.0 in.	RTT ERR = 6.0 in.
G/ S Angle High	RTT ERR = Right	RTT ERR = Right
G/ S Angle Low	RTT ERR = Left	RTT ERR = Left
MLS AZ RTT "0"	RTT CP = 5.0 in.	RTT CP = 5.0 in.
MLS AZ RTT CAL Left (-)	RTT CP = 4.0 in.	RTT CP = 7.0 in.
MLS AZ RTT CAL Right (+)	RTT CP = 6.0 in.	RTT CP = 3.0 in.
MLS AZ CL	RTT ERR = 3.0 in.	RTT ERR = 6.0 in.
MLS AZ Misaligned Left (+)	RTT ERR = Left	RTT ERR = Right
MLS AZ Misaligned Right (-)	RTT ERR = Right	RTT ERR = Left
MLS EL RTT "0"	RTT CP = 5.0 in.	RTT CP = 5.0 in.
MLS EL RTT CAL Above	RTT CP = 6.0 in.	RTT CP = 3.4 in.
MLS EL RTT CAL Below	RTT CP = 4.0 in.	RTT CP = 6.6 in.
"0" MLS EL Error	RTT ERR = 3.0 in.	RTT ERR = 6.0 in.
MLS EL Angle High	RTT ERR = Left	RTT ERR = Right
MLS EL Angle Low	RTT ERR = Right	RTT ERR = Left

1. RTT CP traces are identified by their location on the RMS-33 plotter, in inches.

2. RTT ERR plots are identified by their location on the plot in inches, and by the deflection direction from "0" baselines.

3. “CAL" left and right are referenced to the theodolite operator's left and right.

APPENDIX 8. HAWKER/ SIERRA DATABASE MANAGEMENT (BAe-800)

TABLE OF CONTENTS

Paragraph *Title* *Page*

A8.1 GENERAL A8-1

A8.2 DATABASE OPERATION A8-1

A8.3 AIRCRAFT POSITIONING A8-2

A8.4 POSITION ESTIMATION A8-3

A8.5 RUNWAY UPDATING A8-5

A8.6 LANDMARK UPDATING A8-6

A8.7 THEODOLITE PROCEDURES A8-7

A8.8 DATA RECORDING A8-8

A8.9 PROFILE DOCUMENTATION A8-8

A8.10 FIS AUTO ILS PROCEDURES
- a. ILS-1 Mode A8-8
- b. ILS-2 Mode A8-9
- c. ILS-3 Mode A8-9
- d. ILS-4 Mode A8-13

A8.11 FIS MANUAL ILS PROCEDURES A8-13
- a. DME Land Marking (Using Excel) A8-13
- b. Low DME/ GPS ILS-1 Profile A8-15
- c. Low DME/ GPS ILS-1 Profile (Using FIS Auto and Smoothing) A8-17
- d. Low DME ILS-2 Profile A8-18
- e. ILS-3 Profiles A8-19

Paragraph *Title* *Page*

A8.12 VOR/ TACAN/ VORTAC FIS AUTO PROCEDURES..... A8-19
a. Alignment and Bend Measurements..... A8-19
b. Structure Data A8-19
c. Documentation..... A8-19
d. AFIS Reference Radial (ARR) A8-20
e. Monitors..... A8-20
f. En Route Radials A8-21
g. Terminal Radials..... A8-21
h. Alignment Orbits A8-21
i. Coverage Orbits A8-21
j. Intersection Mode A8-21
k. TACAN Antenna Positions A8-22
l. Standby Equipment..... A8-22

A8.13 VOR/ TACAN/ VORTAC LOW DME PROCEDURES A8-22

A8.14 PAR, VASI, and ASR Modes..... A8-24

A8.15 HAWKER MLS OPERATIONS..... A8-27

A8.16 PREFLIGHT CHECKS A8-28

A8.17 ARCS A8-30

A8.18 LEVEL RUNS A8-30

A8.19 MMLS AZIMUTH MONITORS A8-30

A8.20 MMLS ELEVATION MONITORS A8-31

A8.21 MMLS CMLSA OFFSET AZIMUTH COMPUTED
APPROACH CERTIFICATION..... A8-31

A8.22 INITIAL RMS 33 SETUP A8-32

A8.23 AZIMUTH MLS CHECKLIST (Airborne Setup) A8-34

A8.24 MLS ELEVATION CHECKLIST (Airborne Setup) A8-35

A8.25 MANUAL PROCEDURES..... A8-36

A8.26 OTHER FACILITIES..... A8-36

A8.27 ALTERNATE CAPABILITY UNIT A8-37

Paragraph	*Title*	*Page*
A8.28	BAe-800 AFIS UTILITY FUNCTIONS	A8-40
A8.29	FIS PREFLIGHT CHECKS	A8-42
A8.30	SIERRA AFIS GPS OPERATION	A8-45
A8.31	AIRBORNE OPERATIONS	A8-47
A8.32	“BOOT FROM DISK” FLIGHT INSPECTION PROGRAM CHANGE	A8-48
A8.33	EMBEDDED TRAINING SYSTEM	A8-49

APPENDIX 8. HAWKER/ SIERRA DATABASE MANAGEMENT (BAe-800)

A8.1 GENERAL. This Appendix specifies the use of the Sierra AFIS system as installed in the Hawker BAe-125-800 aircraft, for accomplishing the flight inspection mission.

A8.2 DATABASE OPERATION. The automated database used by the Flight Inspection System (FIS) is guaranteed current only through 1999. Facility additions/ changes since that time must be manually input. The automated database is loaded on a cassette tape via the FIS tape drive assembly.

a. FMS Database. A separate, independent database is maintained for the Flight Management System (FMS). Since the FIS uses the composite FMS position for initial platform accuracy, a current FMS database must be installed or data verified until a current database is installed. There are two databases available, one for CONUS, and one for overseas locations. Both should be on the aircraft and can be changed by the crew.

b. FIS Database: The Flight Inspection Mission Specialist will:

(1) Determine the FIS database is current before beginning a flight inspection mission.

(2) Compare the FIS database to a current AVNIS data product for all facilities. Enter corrections to the FIS database when it differs from the AVNIS data.

(3) Manually enter data for facilities (ASR, VASI, NDB, Comm, DF, etc.) not normally located in the database.

(4) Print the FIS database form before each inspection and retain it as part of the flight inspection recordings.

c. Unique Database Entries. The Sierra FIS has the unique capability to afford multilateration (DME position updating) based on DME or TACAN facilities hand-loaded into the FIS Data Base. **Use caution when loading questionable data; erroneous entries will degrade FIS multilateration accuracy, inducing errors into the facility <u>under test.</u>**

d. Magnetic Variation is entered using a **negative** number to indicate **West** slave variation, and a **positive** number to indicate **East** slave variation.

e. PAR profiles in the FAA database do not include runway length. **This information must be entered in the database, or the PAR results will be inaccurate.**

f. **The "Restriction Flag"** requires a three-digit alpha "Y" or "N" input for ILS facilities. No matter which character appears from AVNIS data sheet inputs, **always change all characters to "N".** (The database was designed to indicate a "Y" for restricted areas of the ILS front course, back course, and clearance sectors. If left as a "Y", the FIS will not analyze this area).

g. **TACAN "Facility Frequency"** requires the paired VOR frequency.

h. When either the longitude or latitude of a facility is less than one full degree South or East, the screen will default to North and West. **Input the correct facility coordinates from the Airport/ NAVAID data sheet to prevent erroneous facility errors**.

i. With the exception of the "Restriction Start" block of the ILS database, **all other database numerical blocks must contain an entry**. For a localizer-only or LDA/ SDF facility, enter the threshold coordinates in the "GLS LAT/ LON" block, a "0" in the "GS Threshold Distance" block, threshold elevation in the "GLS ELEV" block, facility to threshold distance in the "GLS LOC Distance" block, and a "0" in the "GLS Published Angle" block. The "0" in the angle block will enable an additional screen prompt for missed approach distance.

> **NOTE:** Contingency Operations: When adding a DME facility using data not verified by the Flight Inspection Technical Support Branch, it is advisable to load this information to the Supplementary Data Base. Whenever the new facility is used for multilateration purposes, it will be displayed in "inverse video", i.e. highlighted text on the DME page. Only those facilities not loaded to the FAA's Airport/ NAVAID based database will be highlighted.

A8.3 AIRCRAFT POSITIONING

a. The aircraft will be flown smoothly to help reduce acceleration loads on the Inertial Reference Unit (IRU). This will minimize IRU velocity errors that contribute to induced errors on the calculated positions of the FMS and FIS systems in the aircraft. The pilot will normally couple the autopilot to the facility being inspected, except for ARR(s) and Orbit/ Arc maneuvers, which will be coupled to the FMS. Manually flying the aircraft is authorized when there are equipment problems, for training, efficiency, etc., unless it adversely affects the flight inspection data.

b. Each flight inspection profile has a "baro screen", whereby the Mission Specialist can input current ground temperature, barometer setting, and the MSL altitude of the source of this data. As explained later, this data is critical to ILS-2 profiles. The Mission Specialist may elect to not enter current settings for Rho-Theta inspections**. If the "Yes" option is selected, the Mission Specialist must enter current data. Failure to do so will cause drastic DME positioning errors in all profiles.**

A8.4 POSITION ESTIMATION. The position estimation is designed to calculate the aircraft position to within 300 ft, using an automatic Hybrid GPS **multilateration** technique. Hybrid GPS is obtained by manually selecting the #2 TACAN upper antenna. This position "dummy loads" the # 2 TACAN interrogator, inhibiting DME updates otherwise used by AFIS for positioning. **FIS AUTO must be selected for GPS positioning.** Should the GPS system fail, DME updates can be used for multilateration by selecting the #2 TACAN lower antenna. If multilateration is not possible, landmark updates can be made. Accuracy is further enhanced using pilot runway updating for approach type profiles (accuracy in this mode is .01° in azimuth and elevation). The outer marker is also used to automatically update the position during ILS-3 profiles.

a. Position Initialization. Initialize the IRU to the aircraft's position on the ramp - **not the Airport Reference Point.** Update the aircraft's position again at RWY Threshold if delayed on the ramp, or after a lengthy taxi.

b. The FMS provides the initial aircraft composite position to the FIS each time the Mission Specialist enters the flight inspection profile en route screen. The FIS then uses navigation software to compute position, using inertial velocities. The DME multilateration process (if selected) also starts if the aircraft is within 300 nm of the facility (when in FIS AUTO mode). GPS positioning occurs regardless of the aircraft's distance to the facility being evaluated (when in FIS AUTO mode).

CAUTION

If the initial position information from the FMS is sufficiently incorrect, FIS multilateration may not occur since the actual DME received from each station will be inconsistent with the derived FMS station distance; FIS position errors will be significant.

c. The Pilot Will:

(1) Ensure the #2 TACAN is placed in FIS Auto or FIS Manual mode, as coordinated with the Mission Specialist, prior to the start of any flight inspection.

(2) Ensure the GPS (GNSSU) circuit breaker is "in" unless briefed otherwise by the Mission Specialist.

CAUTION

Changing the #2 TACAN switch setting while in an inspection profile can cause significant position and data errors, invalidating inspection results.

(3) If the cockpit GPS is unusable, monitor the FMS sensor pages prior to the Mission Specialist entering the en route screen. If the VPU sensors are not functional, the composite FMS (and initial FIS) position will be derived from the IRU and GPS position. The initial FIS platform error will be directly proportional to any error in the composite FMS position

(4) Correctly initialize the FMS and IRU prior to take-off. This is particularly important in regions where the VPU(s) may not receive data. When possible, realign the IRS at the runway end prior to take-off, using the "hold feature" of the FMS and the "align" switch on the IRS. When DME/ GPS stations are not available, use landmarks to update the FIS position for non-runway update profiles.

(5) If the cockpit GPS is unusable, update the FMS position when airborne, since the FIS may require a new FMS starting position during the flight. This is especially true during times when the VPU(s) are receiving no updates. Use the hold feature of the FMS over a well surveyed landmark, such as a navigation station or runway end. Verify landmark identification and coordinates with the Mission Specialist prior to the inspection.

d. The Mission Specialist Will:

(1) Initialize the FIS (i.e., enter the en route mode) after confirmation from the pilot that the FMS position is reasonable. Initialize airborne at an altitude where the FMS VPU(s) will update, and surrounding DME stations and satellites can be received. In low DME/ satellite environments, initialize airborne once the FMS position “reasonableness” has been established.

(2) Monitor the performance of the positioning estimation system, and reinitialize whenever the positioning accuracy can be verified as unreliable. Use such indicators as DME and azimuth errors, which cycle as the aircraft completes an orbit, inconsistent and unrepeatable results, and a frozen **"POS"** number. An example would be a DME error which went from + .3 to 0 miles after 90° of orbit and then to -.3 after another 90°. The azimuth error would be at maximum when the DME error would be zero.

(3) Monitor the Current DME/ GPS screen periodically during all flight inspections. The FIS will display all DME(s) and satellites, which may be used for automatic position updating. Only those DME(s) and satellites that are asterisked are currently being used by the FIS.

NOTE 1: DME(s) with a range error greater than 1,200 ft, GPS Horizontal Dillution of Precision (HDOP) >2.8, or GPS Horizontal Figure of Merit (HFOM) >183 Meters may be unusable for this purpose.

NOTE 2: GPS positioning is accurate only when the Molodensky Constant matches the map datum of the facility coordinates undergoing inspection.

(4) The FIS will not automatically delete a bad DME; the Mission Specialist must do so by returning to the Database Management menu. GPS positioning, in FIS AUTO mode, can only be de-selected by pulling the GPS circuit breaker. ***The DME (paired VOR) frequency can be changed in the database to that of a non-VOR frequency to prevent the FIS from auto-tuning the facility for multilateration purposes. Using this method, the remaining facility data remains in the database for future reference.***

(5) Determine suitability of aircraft positioning prior to starting any flight inspection.

A8.5 RUNWAY UPDATING. Runway update procedures are used whenever an approach profile is flown for ILS, PAR, ASR, and VASI:

a. The right-seat pilot will actuate the runway event button and provide the Mission Specialist with the distance from centerline. Accuracy is critical. (Note: the software compensates for yaw and pitch angles of the aircraft and receiving antenna locations at the time of runway update.)

b. The left-seat pilot can use the spacing of the threshold markers as an aid to verify deviation from runway centerline.

c. The right-seat pilot must make the correct runway event marks at the spot that corresponds to the runway threshold and runway end location. Use the threshold marker if it exists, being careful not to mark hard surfaces, such as overruns or abandoned runway surfaces that are not part of the landing runway, or those which precede the actual threshold or follow the departure end.

CAUTION

Mark displaced thresholds when they coincide with the green threshold lights. The displaced threshold at the departure end of the runway being checked may also be marked if it coincides with red lights marking the runway end.

d. The runway length in the FIS database should correspond to the length on the approach plate.

e. The Mission Specialist must abort the run if the event marks are missed. The FIS must be reinitialized if the runway marks are accomplished incorrectly or if the run is aborted. **Failure to abort to the main menu after incorrect or missed updates will corrupt future profiles.**

f. A laser in the tail of the aircraft is used to evaluate the ILS-3. The pilot will ensure the "laser conditioning" is enabled in the cockpit. The Mission Specialist will ensure the laser key is activated on the Operator's Console. The pilot will fly the aircraft to a height of 33 to 100 ft AGL for execution of runway updates. An asterisk may appear for laser altitude abort (in post-profile results) when the aircraft update is made below 33 ft. The profile shall be re-flown whenever asterisks appear in the position update table. The Mission Specialist **should** advise the pilot of his reported elevation above the ground until reaching the departure end update. This information is critical to ILS CAT II and CAT III localizer structure evaluations.

g. The pilot must fly the aircraft as close to centerline as possible. A runway with an edge elevation that is different from the center can result in glide slope errors, since the elevation at the event will not be equal to the elevation in the database.

A8.6 LANDMARK UPDATING

a. Flight inspection with the Sierra Flight Inspection System can be performed satisfactorily in areas that lack sufficient DME/ satellite updates to operate in the FIS AUTO mode. The key to this operation is frequent "Landmark" updates to the FIS and concurrent "Fix Hold" updates to the FMS. "Fix Hold" updating enhances the LNAV flight track accuracy and, if selected by the Mission Specialist, will provide a good position to the FIS.

b. Landmark updating will be used for non-approach profiles when insufficient DME stations **(less than three)** are available, in cases of bad DME geometry, and/or lack of satellite positioning.

NOTE: The FIS will display an error on the VDU whenever less than two DME stations are used for positioning.

c. Make frequent updates during periods when no DME(s)/ satellites are received, or, if the indicated accuracy is degraded (increased alignment error, POS that has increased significantly, or is frozen).

d. Make a landmark **at least once per profile** when DME/ GPS updating is totally absent.

e. Use coordinates which are as accurate as possible. For example, use the facility under inspection or other surveyed points such as other NAVAID(s) or runway thresholds. Coordinates from a chart are satisfactory, if taken far enough from the facility to account for possible survey error. DME landmarks can be used if an approved "NAV" program (Excel, etc.) determines a point in space derived from proven start coordinates. (See procedures in the ILS and Rho-Theta sections for details).

f. Remember that landmarks will remain on the landmark data screen until the FIS is turned off. Changing facilities or profiles will not clear the landmark screen.

g. To increase accuracy, execute landmark updates of physical checkpoints at low altitudes. Avoid altitudes above 500 AGL, except for received DME landmarks.

h. Have suitable landmarks entered on the AMIS product for future use.

i. To reduce the possibility of FMS composite position error in areas that either lack or have unacceptable DME sources, remove the VLF/OMEGA and VPU inputs to the FMS. This leaves only the IRU input to the FMS; with frequent manual FMS position updating, errors of 1/10th of a minute or less can be realized. This procedure must be accomplished after each FMS initialization, since the sensors default to an active input status upon "power-up".

j. If desired, the IRU can be realigned while at the threshold, just before takeoff. This procedure usually takes less than 30 seconds, and will eliminate any velocity errors that have accumulated since initialization.

> **NOTE:** Keep aircraft maneuvering to a minimum while performing FIS MANUAL flight inspection. Avoid steep climbs, descents, and bank angles, as well as rapid acceleration/ deceleration, to reduce the positioning errors generated by the IRU/ FIS and produce more consistent results.

A8.7 THEODOLITE PROCEDURES

a. Theodolite tones can be received only via VHF 1 radio. The Mission Specialist must select Group 1 tones on the plotter selection page to activate a small marker on the extreme right side of the plotter. **The "THEO MARK" of the Alternate Capability Unit (ACU) can also be used for ILS inspections only**.

> **CAUTION**
>
> **Do not use the ACU theodolite mark capability for *any NON-ACU VOR or TACAN inspection.* The FIS software delays the plotted VOR or TACAN BRG Deviation traces from the "real-time" ACU Theo Marks.**

b. **VOR nose/ tail antenna switch**. Located on the right side of the Operator's Console, it is to remain in the "tail" position for all profiles, **except** for inbound VOR radials, when the Mission Specialist may select the "nose" position.

c. **RTT Procedures.** Radio Telemetering Theodolite is available on ILS and Rho-Theta profiles. The RTT "Deviation Error" trace deflection is the same as the localizer and glide slope error traces. **Localizer error trace deflects left for a right localizer misalignment and deflects left for a low glide slope angle.** Calibration is software controlled.

A8.8 DATA RECORDING

a. The Mission Specialist Will:

(1) Use the save-to-tape function for ground training and to document repeated system malfunctions during flight inspection (time permitting).

(2) Save the profile in the analysis mode for repeated malfunctions (time permitting). This information will aid in correction of system malfunctions.

(3) Make maximum use of manual recording annotations to either backup or correct automatic.

A8.9 PROFILE DOCUMENTATION. The **Mission Specialist:**

a. Should use the profile documentation screens to record the purpose of each run and the results.

b. May print the profile log and use it as a summary sheet for the inspection.

A8.10 FIS AUTO ILS PROCEDURES

a. ILS-1 Mode. This mode measures localizer clearance, course width, and symmetry. Displayed distance on the VDU is available from both RWY Threshold and the localizer facility.

(1) Maneuvering. The pilot should fly the aircraft along an arc 10 nm from the facility. Altitude will be the lower standard altitude (LSA), or altitudes up to ESV, providing comparability checks in accordance with Chapter 15 of Order 8200.1 have been successfully completed.

(2) Documentation. Tabular results will be reported. Smoothing and post-profile plots are not normally required.

(3) The Mission Specialist will monitor the facility ident tone in the clearance worst-case condition. Annotate the plot at times when the ID heard is satisfactory, but not decoded by the plotter.

b. ILS-2 Mode. This mode measures glide slope angle, path width, symmetry, and structure below path. (Note: The mileage that is displayed by the FIS is the distance from threshold.)

(1) Altimeters. The FIS uses precision barometric data, smoothed by the inertial vertical accelerometer, to compute elevation angle. **Errors will be induced by altimeter installation errors, incorrect reference baro data inputs, changes in barometric pressure, and non-standard atmospheric conditions, such as fronts and temperature inversions. In addition, changes in aircraft altitude with the FIS running (diving to get SBP) will also induce ILS-2 angular errors, and should be avoided**. The only control that the crew can apply is to verify altimeter and temperature readings at approximately 15-minute intervals, while maintaining consistent ILS-2 altitudes.

(2) The glide slope width calculations are less affected by differences in position error than are angle calculations.

(3) Monitor the current altimeter setting and temperature during the flight inspection. Enter corrected settings as they occur.

(4) At the Mission Specialist's option, precede the first ILS-2 with an ILS-3 run to obtain an actual angle correction factor prior to the monitor alarms. This will also provide a position update to the FIS in low DME areas.

(5) Theodolite use is recommended when non-standard engineering type checks, such as glide slope "Zero DDM" and antenna nulls, are performed.

(6) Documentation: Report tabular results. Smoothing and post-profile plots are not normally required.

c. ILS-3 Mode: This mode measures localizer and glide path modulation level, structure, alignment, actual angle, marker beacon width, and mean path width and symmetry. (Note: The mileage that is displayed by the FIS is the distance from threshold.)

> **NOTE:** Back up FIS announced localizer alignment with pilot centerline marks in Zones 2 and 3. If the localizer is rough in these areas, use the pilot marks to report alignment. Use pilot centerline marks to compute Zones 4 and 5 alignment and structure. AFIS-announced Zones 4 and 5 structure incorrectly uses the alignment from 1 nm from threshold to RWY threshold.

CAUTION

Runway lengths which are actually longer than specified in the AVNIS/ FIS DATABASE may result in departure end laser failures. Check the actual runway length against AMIS/ FIS whenever departure end laser marks consistently show zeros or asterisks in the laser update table (presented at the end of the real time ILS-3 plots).

(1) Localizer Alignment Monitors. Monitors should be checked on the ground whenever possible; however, they may be checked airborne during an ILS-3 run. Use the following airborne procedures.

(a) Start the profile at least 5 nm from threshold. Do not couple the autopilot to the course, since the course will be adjusted during the approach. Maintain a visual centerline with minimum maneuvering.

(b) Request maintenance shift the course to both alarm points as quickly as possible when the aircraft is between 3.5 and 1.5 nm from threshold. Recommended airspeed is VREF + 25 KTS.

(c) Verify the course shifts during alarm on the real-time plots, using the localizer deviation trace.

(d) Calculate monitor alarm results by referencing the post-profile error trace in alarm to the 0μA baseline. Note: Disregard the tolerance box.

NOTE: Offset SDF, LDA, Offset Localizer, and other Localizer (with maintenance concurrence) alignment monitors can be evaluated using an "equality of modulation reference". Program an ILS-3 or ILS-4 FIS mode for this purpose.

(2) Mean Path Width and Symmetry. The ILS-3 mode is programmed to measure mean path width and symmetry in Zone 2. The procedure differs from the on path run in that it is flown 75 μA above and below path. The pilot should select and fly the appropriate offset. Fly three runs to obtain the on-path, above-path, and below-path angles. The FIS uses the last ILS-3 on-path angle flown to compute mean symmetry.

(3) ILS Offset Unit. The primary purpose is to intentionally offset glide slope and localizer readings on associated ILS instruments in the **cockpit** when up, down, right, or left ILS offset is selected by the pilot. For flight inspection purposes, it is used as follows:

(a) Glide Slope Mean Width and Symmetry. Selection of the up or down arrow will cause the cockpit CDI to indicate "on-path" when the aircraft is either 75 μA (.35°) above or below path, respectively. All indications on the Mission Specialist's VDU and flight inspection console reflect **actual aircraft deviation from "on - path".** The Mission Specialist will verify the arrow correctly corresponds to the received glide slope crosspointer.

(b) Glide Slope Tilt Check. Selection of the right or left arrow will cause the cockpit CDI to indicate "on - course" when the aircraft is either 150 μA in the 150 Hz or 90 Hz, respectively. Again, the Mission Specialist's indications are of aircraft displacement--this time from localizer centerline. The Mission Specialist should verify that the indicated arrow correctly corresponds to the received ILS crosspointer information.

CAUTION

Both Pilot and Mission Specialist <u>must</u> ensure the ILS Offset Unit is returned to normal when not specifically required for a flight inspection maneuver.

(4) CAT II- III Glide Slope Structure Analysis. The second corrected error trace stops plotting at Point C (software error), and precludes the use of this trace to compute the glide slope structure from Point C to runway threshold. This requires manually analyzing the <u>first corrected error trace</u>. This procedure is approved for CAT II / III flight inspection.

(5) Glide Slope Angle Alignment Criteria (Ref Order 8200.1, Chapter 15). Manually analyze the <u>first corrected error trace</u> between point B and runway threshold for Category II and III glide slopes.

(6) Localizer Back Course:

(a) The announced AFIS alignment of the back course is reversed. Whereas the micro amp displacement is correct, the Mission Specialist must report the opposite L/R alignment on the flight inspection report.

(b) Back-course alignment and structure measurements can be derived in this mode. The aircraft's profile in acquiring the data is similar to the front course localizer only approach. Sensitive autopilot response in the proximity of the localizer antenna may require autopilot decoupling at or near 0.5 nm from the antenna. Fly the aircraft with visual cues to the runway centerline to prevent excessive course aberrations and to enhance aligning the aircraft to centerline.

(c) Enter distance from MAP in feet, i.e., 3000. Ref. Order 8200.1, Section 301, ILS-Localizer Back Course Zone 3.

(7) Offset Localizers. These facilities are evaluated in the ILS-3 Mode, except that the aircraft must be uncoupled at sufficient distance from the runway threshold to be flown manually to the runway threshold and runway end for fix update. The FIS has the capability of defining structure and alignment using this technique. **Aircraft lateral displacement at threshold and the departure end is limited to 99 ft due to software limitations.** In addition, deflection of the localizer crosspointer greater than 150 μA at the first runway update is not recommended. Operationally, the edge of the runway may be selected for the first fix update to preclude crosspointer deviation greater than 150 μA.

(8) Repeatability. During commissioning or special inspections for an angle change, use the average of no less than 2 runs, with 0.06° or less difference, to determine the actual angle. If the ILS-3 angle runs do not repeat within 0.06° on any type inspection, terminate the inspection until the cause of the non-repeatability can be determined.

(9) Best Fit Straight line (BFSL):

(a) The BAe-800 Sierra Flight Inspection System (FIS) Best Fit Straight Line (BFSL) flight inspection software is authorized for evaluating glide slope facilities per Order 8240.47.

(b) Change the following in the FIS facility database:

1 GLS Lat/ Long to AVNIS database glide slope Aiming Point Lat/ Long

2 GLS Elev to AVNIS data base CL EL ABM elevation

3 GLS Cross - RW Offset to "L0001"

(c) Fly three ILS-3 runs (Normal/ BFSL prompt selected as Normal).

(d) Note the Zone 2 BFSL Angle.

(e) Note the Aiming Point Elevation.

(f) Change the Facility Data Base (FDB) GS – HGT to reflect the average of the three aiming point elevations

(g) Continue ILS-3 runs until the criteria in Order 8240.47 is met.

NOTE 1: The RDH must be determined using the formula in Order 8240.47.

NOTE 2: The ARDH value mentioned in Order 8240.47 cannot be determined with the Sierra.

NOTE 3*:* The Hawker FIS does not have the capability to announce Point B, C, or T microamp/ feet displacement in lieu of the ARDH.

d. ILS-4 Mode: The ILS-4 mode is a basic manual mode. It can be used for any type of ILS flight inspection, although the primary purpose is for the following runs:

(1) Modulation Level and Equality.

(2) Phasing.

(3) Clearance Below Path.

(4) Glide Slope Antenna Engineering Checks.

NOTE 1: Tabular data for Fix Event results is provided. Runway updating is not provided. All crosspointer information must be manually analyzed.

NOTE 2: Pilots should mark both the 1,000 ft light bar and threshold to orient the recorded plots.

NOTE 3: Marker Beacons cannot be analyzed in an ILS-4 profile.

NOTE 4: The mileage that is displayed by the FIS is the distance from the front course threshold.

e. Computed elevation angle. The announced ILS-4 vertical angle will be inaccurate close to the runway due to range and altitude errors.

A8.11 FIS MANUAL ILS PROCEDURES

a. DME Land Marking (Using Excel). Following is a step-by-step procedure using a geodetic spreadsheet obtained from the Flight Inspection Technical Support Team.

(1) OBTAIN FROM the AVNIS data sheet:

(a) Localizer Coordinates.

(b) DME Coordinates.

(c) ILS Back-Course Bearing.

(2) Open Windows/ Excel.

(3) Select NAD 83/ direct 83.xls file.

(4) Cursor to DIST A (nm).

(5) Enter 10.

(6) Enter LOC LAT/ LON (Example - 313455.61 is thirty-one degrees, thirty-four minutes, fifty-five and sixty-one one-hundredths of a second.)

(7) Cursor to RAD A.

(8) Enter ILS BCB.

(9) LLNB LAT/ LON on the right side of the worksheet will be the correct landmark coordinates to use as a DME landmark on Localizer Centerline for a 10 nm ILS-1 arc and an ILS-2 level run.

(10) Compute additional DME landmarks (one at 11 nm from the localizer, and one that should occur outside the ILS-2 SBP point) from the localizer coordinates.

(11) LLNB will represent additional LM(s), used for ILS-1 and ILS-2 runs, as described later.

(12) Close the file and open NAD 83/ INV 83.xls

(13) Cursor to LLNA, LAT/ LON.

(14) Enter the VTAC, TACAN, or DME facility coordinates the pilots will use to landmark.

(15) Cursor to LLNB LAT/ LON

(16) Enter the coordinates obtained in Step 9 (10 nm fix).

(17) The resulting distance will be the correct DME to mark a 10 nm ILS-1 arc, or an ILS-2 level run.

(18) Cursor to a new LLNA LAT/ LON.

(19) Enter the DME coordinates from Step 14.

(20) Cursor to LLNB LAT/ LON.

(21) Enter the next LM coordinates from Step 11.

(22) The answer will be the additional DME(s) to LM an ILS-1 or ILS-2 run.

(23) Load the DME LM coordinates (from Steps 9 and 11, respectively) into the Sierra Landmark page. The altitude required on the LM page is the aircraft's MSL altitude while over the LM (usually GSI or FAF).

(24) Advise the pilots which DME LM is armed for a particular run.

b. Low DME/ GPS ILS-1 Profile. To be used when FIS Auto procedures are impractical.

NOTE: This procedure is useful in areas of no DME(s) (or when just 2 DME(s) are received, skewing the FIS positioning accuracy) and where GPS accuracy is doubtful. Normally, all the crossings will be accomplished in the same direction, landmarking at 11 nm and gathering localizer data at 10 nm. Inspection time will increase due to the inefficiency of the flight track.

(1) The Pilot will:

(a) Select **FIS MANUAL** from the cockpit.

(b) Program an 11 nm arc, referenced to the localizer coordinates, on the pilot's FMS. A 72-leg orbit will keep the aircraft in a continuous turn, rather than a series of straight segments.

(c) Input the ILS-1 coordinates, obtained using the Excel program, in the FMS, as well as RWY Threshold.

(d) Establish a racetrack pattern, perpendicular to the localizer front course centerline, between 10 and 11 nm (as measured from the localizer).

(e) On the MFD, select LNAV #2 as the display source.

(f) On the co-pilot's FMS, select "go direct" to the 11 nm coordinates. (If the 10 nm coordinates are also entered in the FMS, the MFD will display the two points, in conjunction with RWY Threshold, as a straight line coinciding with the LOC course).

(g) On NAV page 1, cursor to the "DTK" line, and enter the LOC inbound course. This will display a course line to the 11 nm waypoint that coincides with the LOC course.

(h) While on the arc, the MFD will show the LOC on-course line and the 11 nm waypoint. If the co-pilot is using the LNAV display on the ND, "second course" can be brought up on the ND to depict the LOC raw data.

(i) When within 10° of LOC CL, use the 5 nm range on the MFD to ensure the most accurate update presentation.

(j) When passing through the LOC CL at 11 nm, the waypoint symbol should be centered on the MFD aircraft reference symbol. This is a visual cross-check to verify the FMS composite position is accurate.

(k) The computed DME distance must be cross-checked to ensure LOC CL fix update accuracy. The LNAV presentation on the MFD is nothing more than a graphic representation of the aircraft's flight path. It is only as accurate as the composite position in the FMS. **The critical factor for ILS-1 course crossing is to cross the LOC CL at the computed DME. If the aircraft crosses the CL at a DME distance more than 0.1 nm from the desired DME distance, the run should be repeated. A 0.1 nm DME fix error equates to a 0.06° difference in measured course width (based on a 4.00° course width and 0.15 nm DME error)**.

CAUTION

A maximum of 0.12° course width error can be induced between runs that varied from + 0.15 to - 0.15 nm DME error.

(l) If the waypoint crossing looks good, execute a landmark update for the FIS and a "hold-update" for the FMS as the LOC raw data crosspointer passes the "On-Course" position. **A position difference of 0.1 nm or less on the FMS is satisfactory in the ILS-1 mode.**

(m) Course width measurements should be flown at 180 knots to allow for a small turning radius.

(2) The Mission Specialist will:

(a) Set up the FIS for an ILS-1 CW or CCW with the 11 nm LM armed.

(b) Ensure the pilot executes the landmark at the DME corresponding to 11 nm on localizer CL, **prior to starting the FIS**. Execute another LM prior to starting the FIS if the position error exceeds **1,400** ft after the first LM. **Reject and repeat any landmark executed at a displayed DME error greater than ± 0.2 nm (± 0.1 nm for commissioning or engineering assistance) of the desired DME reading at the landmark.**

(c) Ensure the pilot continues the racetrack, and starts the FIS in time to evaluate a 10 nm ILS-1 run in the direction selected.

(d) Stop the FIS when sufficient data has been collected.

(e) Select **"NO"** at the smoothing prompt. A "YES" selection will cause erroneous facility results and induce FIS positioning errors.

NOTE 1: Post-Profile plots are not necessary unless desired to correctly display the FIS Bearing and Distance marks.

NOTE 2: The pilot should monitor the IRU drift rate by executing a "Hold Update" at each landmark.

c. Low DME/ GPS ILS-1 Profile (Using FIS Auto and Smoothing) (Preferred Low DME Flight Inspection Mode)

(1) This is the recommended Low DME ILS-1 procedure, since the aircraft can position for normal 10 nm ILS-1 CW/ CCW arcs. Landmarking and smoothing the profile will apply the landmark accuracy, as well as any received DME(s), to the entire run.

CAUTION

FIS position accuracy may be corrupted during the following:

(a) If only 2 DME(s) are received.

(b) If ILS DME(s) that are adjusted to indicate 0 DME at runway threshold are received.

(c) When poor geometry between available DME(s) is present.

NOTE 1: Remove all but one of the DME facilities from the database in these situations. This action will force the FIS to place maximum emphasis on the DME landmark.

NOTE 2: If GPS positioning is inaccurate, pull the GNSS circuit breaker.

(2) The pilot will set up the FMS and MFD for a 10 nm and LOC CL crossing.

(a) Select **FIS AUTO** from the cockpit.

(b) Establish the aircraft for an ILS-1 10 nm from the localizer.

(c) Set the FIS for an ILS-1 profile with the 10 nm LM armed.

(d) Start the FIS in time to evaluate the localizer CW, symmetry, and clearances.

(e) **While the FIS is running,** execute the LM at the DME corresponding to 10 nm on localizer CL. **Reject and repeat any landmark executed at a displayed DME greater than ± 0.2 nm (± 0.1 nm for commissioning or engineering assistance) from the desired reading at the landmark**.

(f) Stop the run when sufficient localizer data is obtained.

(g) Select **"YES"** at the smoothing prompt. In this case, (FIS AUTO) smoothing will correctly update the run and ensure accurate results.

NOTE: Minor delays in obtaining ILS-1 results (5 - 10 seconds) are necessitated, using the smoothing option.

d. Low DME ILS-2 Profile

(1) Select **FIS MANUAL** from the cockpit.

(2) Establish the aircraft inbound, on localizer centerline, beyond the SBP point.

(3) Select ILS-2 profile from the Profile menu.

(4) Arm a LM projected to occur outside the SBP. A calculated DME position along the localizer centerline is a desirable landmark.

(5) Execute the LM at the DME corresponding to the desired landmark, while on localizer CL, **prior** to starting the FIS. **Reject and repeat any landmark executed at a displayed DME greater than ± 0.2 nm from the desired DME reading at the landmark.**

NOTE: If possible, execute two LM(s) during the first ILS-2. Thereafter, a single LM will suffice, once the ILS-2 holding pattern is established. Use the two LM method anytime the pattern is interrupted or if LM positioning error exceeds 1,400 ft.

(6) Start the FIS prior to the SBP point.

(7) Stop the run after the required "CAP". Select **"NO"** at the smoothing prompt.

NOTE 1: The pilot should monitor the IRU drift by executing a "Hold Update" at selected landmarks.

NOTE 2: In areas of no DME, any prominent geographical fix of known coordinates, located along the aircraft's track, can be used for an ILS-2 landmark update. The most logical choice would be a marker beacon or RWY Threshold.

e. ILS-3 Profiles

(1) ILS-3 profiles **must be flown in FIS- AUTO mode.** Reset FIS to the "main menu" screen if problems are encountered.

CAUTION

In remote areas (i.e., islands) where a total of two DME(s) are received for multilateration and GPS positioning is inaccurate, it may become necessary to delete one of the DME facilities from the FDB. In these conditions, manual deletion of one DME forces the FIS to compute ILS results, based solely on runway updates, eliminating FIS error based on bad DME geometry.

NOTE: If GPS positioning is inaccurate, pull the GNSSU circuit breaker.

(2) In low DME/ satellite areas, it may become necessary to landmark update prior to obtaining the RWY updates. Use either a DME landmark obtained from the Excel program, or a known coordinate along the ILS-3 track. **Landmark at a distance sufficient to update the FIS position beyond 5 nm from threshold. FMS updates can also be accomplished at the threshold and/or departure runway end.**

(3) Ensure the weather radar is in the off/ standby position prior to crossing the FAF.

A8.12 VOR/ TACAN/ VORTAC FIS AUTO PROCEDURES

a. Alignment and bend measurements will not be reported less than 10 nm from the station (with no GPS capability), or less than 5 nm (with adequate GPS/ DME positioning).

b. Structure data from the 5-mile segment closest to the facility will be invalidated when overflying the facility under test with the FIS operating. If the FIS can be stopped, or “analysis off” instituted prior to the overflight, automated structure results can be reported. **Otherwise, manually analyze the structure.**

c. Documentation. Annotate gear transition on the printer/ plotter when using TACAN #1 lower antenna (due to a temporary AGC deflection).

d. AFIS Reference Radial (ARR). An ARR will be established as a reference for inspecting course alignment, monitors, and modulation. The ARR alignment should be the mean azimuth error for a 5 nm segment between 10 to 25 nm (e.g., 10-15, 15-20, 20-25).

(1) Select a radial with good structure quality that compares well with the alignment orbit.

(2) Report the filtered bearing error (mean alignment) and VOR modulation for the 5-mile segment between 10 and 25 nm from the tabular results.

(3) Document the established bearing alignment, segment, direction, and MSL altitude of the ARR on an AMIS product.

(4) On subsequent inspections, **evaluate the same segment, in the same direction, at the established altitude.**

(5) If the ARR is established over a 10 nm segment, manually average the long-term filtered bearing error from the two 5-mile segments involved.

e. Monitors. After establishment of an ARR, monitors can be checked either airborne or on the ground.

(1) Ground Procedure. Using the crosspointer trace, fix event the Normal and each alarm shift for documentation in post-profile tabular results.

(2) Airborne Procedure. Use the filtered bearing error data to evaluate the course shifts.

(3) Alternate Airborne Procedure 1. At the start of the ARR segment, direct maintenance to alarm the facility in a positive then negative direction, returning to Normal, all in the 5-mile segment. This entails maintenance **quickly** shifting the alignment to the alarm points, notifying the flight check aircraft at each alarm, then returning to normal. Manually analyze the Bearing Error trace instantaneous shift from Normal to the alarm points

(4) Alternate Airborne Procedure 2

(a) Select a prominent ground checkpoint that can be repeatably identified.

(b) Measure the raw received bearing while directly over the checkpoint while the equipment is in Normal.

(c) Repeat this procedure for each alarm condition, ensuring that the received bearing while in alarm condition is within 1° of the received bearing while the equipment was in Normal.

(d) Restore the facility to Normal and ensure that the received bearing is within the established limits.

f. En Route Radials. Inspect the radial(s), either inbound or outbound, throughout its intended use, for mean alignment, structure, and other required parameters.

g. Terminal Radials

(a) Mixing radial and orbital flight during a profile will result in confusing tabular data. To eliminate this, approaches will be subdivided into a series of arcs and radial profiles. Fly holding patterns in radial mode and arcs in orbit mode.

(b) Nulls: On the Hawker FIS, nulls may be flown inbound or outbound, preferably in a figure-eight maneuver. If there is insufficient time to set up the FIS profile, the Mission Specialist may abort the profile between nulls, eliminating time required for post-profile plotting. The Mission Specialist then must manually analyze the entire null run.

h. Alignment Orbits

(1) The radius of an orbit for alignment evaluation is normally 10 nm and beyond, and the tapeline altitude is selected to provide an orbit 4 - 6° above the facility. **FIS orbit distances less than 10 nm are not recommended.**

(2) Smoothing and post-profile plots are not normally required.

i. Coverage Orbits

(1) Post-profile plots and tabular results are not mandatory.

(2) Manually analyze structure in real-time. Alignment can also be monitored in real-time, providing FIS positioning is accurate, via the VOR or TACAN Bearing Error trace.

j. Intersection Mode

(1) **VOR.** While in FIS Auto mode, the FIS can evaluate 2 VOR(s) for structure, signal strength, modulations, alignment error, and flag lock-on. The profile is set up for the primary facility, then the IDENT of the secondary facility, when provided by the operator, auto-tunes the secondary VOR receiver. The final requirement is for the secondary OBS setting, again a “typed-in” prompt.

CAUTION
Post-profile tabular data is provided for the primary facility only.

(2) TACAN. As with the VOR, primary and secondary TACAN(s) can be evaluated using the same profile setup. FIS Manual must be selected to auto-tune the secondary TACAN, **disabling** multilateration. The preferred technique is to switch from FIS Auto to FIS Manual immediately prior to the intersection, thus preventing FIS platform drift.

CAUTION

Range Error and all post-profile tabular data ARE provided for the primary facility only.

k. TACAN Antenna Positions. Select the antenna that produces the strongest AGC. On arcs and orbits, the upper antenna normally provides higher AGC readings. On approaches, the lower antenna normally produces higher AGC indications, unless antenna screening is a problem. The two FIS TACAN(s) are shared with the cockpit. The pilot will set TAC # 1 to the TACAN channel being flight inspected. It must remain tuned throughout the inspection in order to evaluate the facility. TAC # 2 is FIS controlled during normal ops (FIS AUTO). This configuration allows the FIS to obtain the automatic DME updates, when used, for positioning. It will be unusable for aircraft navigation by the co-pilot during these times. During Hybrid GPS positioning (normal operation), the #2 TACAN upper antenna is manually selected to disable DME multilateration. During FIS Manual operations, TACAN #2 is usable for navigation when the lower antenna is selected.

l. Standby equipment. If transmitters are changed while in a profile mode, the tabular data will be invalid for the sector that the transmitter was changed. Annotate the plot when transmitter changes occur, to prevent reporting the invalid sector.

A8.13 VOR/ TACAN/ VORTAC LOW DME PROCEDURES

a. Alignment Orbits

(1) Select **FIS MANUAL** from the cockpit and pull the GNSSU CB.

(2) Set up a CW or CCW orbit profile on the FIS.

(3) Arm the AFIS-provided landmark.

(4) While in pre-profile mode, **and prior to starting the FIS,** execute the landmark, outbound over the station at an altitude of 500 ft AGL, or lower, to ensure landmark accuracy.

NOTE: Execute two landmarks if the FIS position error exceeds 2,000 ft after the first landmark.

b. Start the FIS **only** upon turning onto the orbit at 10 nm. (**Starting the FIS while still in radial flight will invalidate the post-profile results**).

c. Terminate the orbit and stop the FIS NLT 120° after start.

d. Select **"NO"** at the smoothing option. A "YES" selection will incapacitate the post-profile results and provide erroneous platform error.

e. Fly inbound to the station while printing post-profile results.

f. Repeat Steps 1 through 8 until the orbit is completed, in 3 or more segments.

NOTE: Continue executing 2 landmarks anytime the FIS position error exceeds 2,000 ft at the time of the landmark.

g. Radically probe outbound and/or repeat shorter arc segments in any area of questionable facility results.

NOTE 1: If the Bearing or Range Error drift is excessive, as can be caused by an accumulative IRU sensor error after several hours of flight, land and re-align the FMS. This action will reset the velocity sensors and minimize the drift in most cases**.**

NOTE 2: The pilot should monitor the IRU drift rate by executing a "Hold Update" at each landmark.

h. Low DME Radials In Lieu of an Alignment Orbit

(1) Select **FIS MANUAL** from the cockpit.

(2) Arm the AFIS-provided LM (always the facility under test) prior to over flying the facility.

(3) Start the first radial outbound, execute landmark over the station.

NOTE: Execute two landmarks if the FIS position error exceeds 2,000 ft after the first landmark.

(4) Start the FIS immediately after verifying a satisfactory landmark.

(5) Terminate the profile and stop the FIS at 15 nm, evaluating alignment 10-15 nm.

(6) Select **"NO"** at the smoothing prompt.

(7) Select the next inbound radial not more than 90° offset from the last radial.

(8) Start the profile and the FIS at 15 nm (evaluate alignment 15-10 nm) and fly to the station, landmarking over the station.

(9) Stop the FIS **after** the landmark. (**Do not smooth the run**).

(10) Quickly set the FIS for the next outbound radial while the aircraft prepares to overfly the station.

(11) Repeat the procedure in Steps 1 -6 for the next outbound radial.

NOTE 1: Always landmark the facility on each inbound radial and again on the outbound radial; execute two landmarks anytime the FIS position error exceeds 2,000 ft.

NOTE 2: The pilot should monitor the IRU drift rate by executing a "Hold Update" at each landmark.

(12) Refly any radial outbound (after again landmarking the station) to verify questionable facility results.

(13) Continue the procedure until the four radials are completed.

A8.14 PAR, VASI, AND ASR MODES

a. The non-ILS runway updating profiles are PAR, VASI, and ASR approach profiles. Results depend on crew inputs, rather than a received signal from a NAVAID.

b. Results are calculated slightly differently for each profile. PAR results include average angles and BFSL data for elevation and azimuth. VASI results are average and BFSL data for elevation angles only, and ASR results are distance from centerline when the event button is pressed.

c. The co-pilot will make runway event marks at the approach and departure thresholds. The same procedures apply as with the ILS-3 profiles.

d. PAR Inspections

(1) Input information for the data base as follows:

SIERRA	AVNIS
GP INT TO THR OFFSET	GPI-TH DISTANCE
GP INT LAT	GPI LAT
GP INT LON	GPI LONG
GP INTERCEPT ELEV	GPI ELEV (MSL)

(2) Elevation. Mean elevation angle is measured from the GPI coordinates in the database.

(3) Azimuth

(a) PAR azimuth accuracy can be inspected visually. The tabular results can assist the pilot in determining alignment accuracy.

(b) The mean azimuth error is the average of the individual on-course azimuth errors at each event mark. The reference point is the GPI coordinates.

(4) Orbit mode. This mode is used to measure the lateral coverage of the PAR signal. It does not use the runway updating feature.

e. VASI Inspections

(1) Approach Profile

(a) Mean elevation angle is measured from Runway Reference Point (RRP) coordinates in the database. The mean angle will be correct if these coordinates are correct. If the individual angles in the table change as the aircraft approaches the runway, the RRP data is suspect.

(b) The pilot will fly the VASI on-path, while the co-pilot makes marks at equal intervals. Since the VASI is .5° wide, the pilot will attempt to fly down the center of the path or vary the approach between the red/ red and white/ white extremes, so that the true average angle is computed.

(2) Radial Profile. The pilot will fly a level run, and the co-pilot will event mark the light color transitions (red/ red to red/ white and red/ white to white/ white). Runway marks are not required. This mode will not be as accurate as the approach mode.

(3) Orbit Profile. The orbit mode is used for lateral coverage. The pilot will fly the aircraft perpendicular to the runway and event mark when the VASI lights first appear and then disappear.

f. PAPI Inspections

(1) PAPI procedures are slightly different than VASI due to the two extra light units and the common location of the units.

(2) PAPI will be flown, using the VASI approach profile mode, to measure the red/ white transition angle for each of the four adjacent light units. The pilot may fly a preliminary level run to evaluate the overall symmetry of the PAPI system, while the co-pilot marks the transition from red to white for each light unit. The pilot will then descend to the glide path and make a normal approach, while the co-pilot makes runway threshold and departure end ILS-3 type event marks. The Mission Specialist will obtain the transition angle for each of the four units from the tabular results table. The on-path angle will be the average of: the second and third angle (for a 4-box system), or the first and second angle (for a 2-box system).

(3) Reported PAPI angles shall be determined by flying an approach down the red/ white transition point for each box, making multiple event marks of the transition point. Use the VASI approach mode. Each approach will terminate in ILS-3 type updates at threshold and departure ends of the runway. This requires a maximum of four runs (for the 4-box system), although runs on Boxes 2 and 3 (4-box PAPI) are the minimum required angle runs.

g. ASR

(1) General: A separate data base entry is required for the orbit and approach modes to the same location. The Mission Specialist will ensure that the database is completely filled. (A runway heading entry is required for the orbit mode, even though the data will not be used in the computation.)

(2) Approach Profiles: The approach mode provides data on the displacement of the final approach course from the extended centerline in feet. While the tolerance for alignment is applied to the event mark at the missed approach point, the on-course event data from the entire approach can be given to ATC to show how well the approach coincided with the runway centerline.

(3) Orbit profiles: The orbit mode is used for measuring ASR orientation through manual azimuth and range input. The FIS then calculates the error and displays it in terms of azimuth error, total distance error, and percent of error (total distance error divided by the range to the facility). This mode can be used in lieu of ground checkpoints. The Mission Specialist should first ensure that the calculated position of the aircraft is accurate before using the results. Runway event marks are not used for this profile.

A8.15 HAWKER MLS OPERATIONS

a. The Hawker MLS capability consists of a portable package which must be installed prior to each inspection. It is a RTT dependent manually operated flight inspection system.

b. The package consists of dual MLS receivers, data monitor (capable of displaying all basic and auxiliary data words, and real time azimuth/ elevation position), analog printer capable of printing all data displayed on the monitor, RTT receiver and calibration unit, oscilloscope, RMS-33 printer/ plotter, and self-contained VHF radio.

c. Either MLS receiver can be selected to provide guidance signals and flags to the cockpit Standby Attitude Indicator via an MLS-1/ MLS-2 select switch on the Mission Specialist's console. During normal MLS flight inspection, MLS-1 is selected with the following results:

(1) Connects the forward and aft MLS antennas to the Bendix ML-211B receiver.

(2) Provides the Bendix receiver output signals to the cockpit, RMS33 recorder (for flight inspection analysis), data monitor, and the RTT Control box.

d. Selection of "MLS-2" does the following:

(1) Disconnects the Bendix flight inspection receiver from the cockpit and flight inspection panel.

(2) Connects the "USAF unique" CMLSA receiver to the cockpit Standby Attitude Indicator.

NOTE 1: The CMLSA receiver, using internal software, allows an aircraft to fly an MLS approach to RWY centerline when the MLS Azimuth station is offset to the side of the runway.

NOTE 2: The CMLSA is not approved for any other flight inspection use. Its only function is to allow certification of a "computed" MMLS approach.

CAUTION

The Mission Specialist can cause a centered cockpit CDI for any azimuth course ± 40° of centerline and any angle up to 15°

NOTE 3: The Hawker's autopilot cannot couple to the MLS signal.

e. A separate headset, configured to plug-in to the MLS panel, is provided. MLS-1 IDENT can be monitored by depressing the lower NAV 2 audio select on the radio. Set the selector to Position 3 and adjust volume using the Bendix receiver. Ground maintenance and theodolite can be monitored on the lower COM 1 audio select.

NOTE: While wearing this headset, cabin intercom communications are not possible. A separate headset must be used to communicate with crewmember.

f. ID plot on RMS 33 printer is controlled by the RTT control unit selector knob.

A8.16 PREFLIGHT CHECKS

a. Select MLS-1.

b. Perform the manual self-test. When the mode selector switch on the control display is set to "TST", a self-test of the Bendix ML-211B receiver and control display is initiated. The test will last 12 seconds, as follows:

(1) 4 seconds – All segments of the LCD will appear. Azimuth and elevation deviation indicators center and the azimuth and elevation flag appear.

(2) 2 seconds – The LCD will blank, the deviation indicators will move up and left 40% of full scale, the flags will be removed from view, and "MTST" is sent on the audio.

(3) 2 seconds – Pass is displayed (provided unit passes) in the channel window of the display unit and remains until the mode switch is moved out of the test position. Flags remain out of view, left deviation continues, LU is displayed in the GS window of the display unit.

(4) 4 seconds – The deviation indicators change to the right and down for 40% of full scale. RD replaces LU in the GS window of the display. Flags remain out of view.

(5) At the completion of the 12 seconds, MTST audio stops, deviation indicators center, AZ and GS flags move into view. "PASS" continues to be displayed in the channel window.

c. Select MLS-2.

d. On the CMLSA control head, set the "Function" control to "TST".

(1) Azimuth and glide path flags disappear.

(2) GP deviation bar on the CDI moves up to half-scale deviation.

(3) The AZ deviation bar on the CDI moves left to half-scale deflection.

(4) After 3 seconds, the AZ and GP deviation bars revert from fly up/ left to down/ right and remain for 6 seconds.

(5) After 6 seconds, both GP and AZ deviation bars return to zero deflection and the GP and AZ flags appear.

(6) The CDU display shows “END” for a successful check. If a failure occurs, the display will show “FAIL”.

e. DME associated with the MLS is displayed on an indicator located directly in front of the Mission Specialist. DME range accuracy may be evaluated by developing a separate DME database for the AFIS, or by verifying the indicated DME to a known distance. Once range accuracy is verified, the Mission Specialist can monitor the DME IDENT by plugging a headset into the Intercom panel at the AFIS position and using a long communications cord to reach the MLS panel, forward of the AFIS position. DME unlocks can be monitored via the indicator on the MLS panel.

f. The MLS-1 Data Monitor displays the aircraft’s current offset from the Designed Procedural Azimuth (just as on an ILS-1 run, a negative number indicates right of centerline, and a positive number represents left of centerline. Changing the azimuth or elevation on the MLS receiver control head centers up the pilot’s indicator when the aircraft’s position matches that setting; however, the data monitor will always reference the aircraft’s position from the designed procedural azimuth. The elevation display indicates the angle the aircraft is flying relative to the elevation antenna. Both azimuth and elevation data are provided only when in the Proportional guidance area of the MLS.

g. MLS-1 azimuth crosspointer, RTT, and differential traces are normally calibrated for a 0.05° deflection/ light line (0.1 inch) of movement on the RMS-33. This value is attained by calibrating the RTT for a 1.0° per 2-inch deflection on the plotter using the RTT control box and a specially modified theodolite. Elevation crosspointer and its associated RTT and differential traces are normally calibrated for a 0.30° per 1.6 inches or 0.01875° per light line (0.10 inch).

NOTE: Calibration of 0.30° per 2 inches or 0.015° per light line (0.10 inch) is also acceptable.

h. A left (as seen by the aircraft) azimuth misalignment is corrected by a negative bias adjustment on the MMLS. A low elevation angle is corrected by a positive MMLS bias adjustment.

A8.17 ARCS. Azimuth and elevation 10 nm and 20 nm arcs are accomplished without RTT. Depressing the "75/ 150" selector on the MLS-1 RTT control box to the "150" position doubles the value per light line of the crosspointer traces and allows approximately 2° of azimuth to be displayed on the RMS 33. By manually selecting azimuth courses that "lead" the aircraft position, the full 80° of azimuth arc can be displayed on the plotter in a saw-toothed format (similar to a Rho-Theta Orbit).

> **NOTE 1:** The aircraft should be flown as slowly as possible to allow the Mission Specialist time to set up the ever-changing azimuth courses.
>
> **NOTE 2:** The azimuth crosspointer trace is active only when an azimuth course within proportional guidance is selected.
>
> **NOTE 3:** Azimuth courses offset from runway centerline are determined by referencing the magnetic azimuth of centerline to the degree of positive or negative offset, as determined from the data monitor display, i.e., CL course is 090, data monitor indicates + 15, select 105 in the azimuth select to obtain azimuth crosspointer on the RMS-33.

CAUTION

Pilots must disregard cockpit MLS azimuth indications (due to the Mission Specialist "slewing" the azimuth course setting on the MLS receiver).

A8.18 LEVEL RUNS. Are also flown without RTT guidance. The Mission Specialist should advise the pilot as to the azimuth selected (current requirements are for one on the designed procedural azimuth and 10° either side). Elevation angles are selected by the Mission Specialist to maintain elevation crosspointer on the plotter, again in a saw-tooth manner. Depressing the 75/ 150 selector on the MLS-RTT control box to the 150 position doubles the value per light line.

CAUTION

Pilots must disregard cockpit MLS elevation indications (due to the Mission Specialist "slewing" the elevation angles on the MLS receiver).

A8.19 MMLS AZIMUTH MONITORS. Azimuth monitors, when checked on the ground, can be accomplished by selecting the received azimuth on the MLS receiver, then monitoring the alarm shift. Azimuth crosspointer calibration value remains **0.05° per light line.** Apply the airborne PFE tolerances throughout the entire approach. Any out-of-tolerance PFE indications must be corrected by "tightening" the monitor shift or taking action to improve the approach PFE in normal settings.

A8.20 MMLS ELEVATION MONITORS

a. Fly an elevation RTT run in both the low angle and high angle alarm

b. Apply the airborne PFE tolerances throughout the entire approach. Any out-of-tolerance PFE indications must be corrected by "tightening" the monitor shift or taking action to improve the approach PFE in normal settings.

A8.21 MMLS CMLSA OFFSET AZIMUTH COMPUTED APPROACH CERTIFICATION

a. Select MLS-2

b. On the CMLSA control head:

- Select "ENT" on the left control
- Enter channel, azimuth, and elevation angle.
- Select "NAV" on the left control.
- Select "AZ" on the center control.
- Select "Comp-Auto" on the right control.

NOTE: MLS-1 functions are disabled.

CAUTION

Cockpit instruments now center when on extended rwy centerline; <u>not</u> on the designed approach azimuth.

A8.22 INITIAL RMS 33 SETUP. The initial settings on the RMS GR33 record are as follows. Refer to the RMS User's Manual for further information.

LABEL	CHANNEL NUMBER	ON/ OFF	SENSITIVITY		POSITION
AZ FL	000	ON	1.200	VI	200
EL FL	001	ON	1.200	VI	1100
EL CP	002	ON	37.5	MI	900
AZ CP	003	ON	37.5	MI	300
RTT	004	ON	37.5	MI	500
RT FL	005	ON	.300	VI	90
DIFF	006	ON	37.5	MI	600
DMFL	015	ON	1.000		1000
AZFO	025	ON	1.000	VI	200
ELFO	026	ON	1.000	VI	1100
RTFO	027	ON	1.000	VI	90
AZO	028	ON	1.000	VI	300
RTO	029	ON	1.000	VI	500
DFO	030	ON	1.000	VI	600
ELCO	031	ON	1.000	VI	900

The label for any channel turned OFF is immaterial.

Grid style **9** is selected.

Chart speed of 6 inches/ MIN is selected.

Filter – Select LOWP N1 for Channels 0 thru 6.

The following routines are to assist in the adjustment of some of the above parameters.

To print **DEFAULTS:**

ON
HOLD LIGHT OFF
ROTARY FUNCTIONS
SET
Y/O
Parameter Table
Y/ O
SET light on
Y/ O (will start printing)

The first 4 steps are usually common to all adjustments.

(1) ON

(2) HOLD light off

(3) Select menu with rotary knob

(4) Y/ O to sub menu

GRIDS	**POSITION**
(4)	(4)
SET set light on	SET light off
ROTARY (0-21)	ROTARY to select position (100 = 1 inch)
SET set light off	SET light on

SENSITIVITY

(4)
ROTARY (to proper channel)
SET
Y/ 0 for channel ON/ OFF (Label + value is ON)
ROTARY to change sensitivity (FINE for < 1.0)

LABEL

(4)
ROTARY to select channel
SET light on
N/ I selects position to change
ROTARY selects character for that position
SET light off
CLT
Y/ O
More detailed instructions are in the RMS GR33 User Manual.

A8.23 AZIMUTH MLS CHECKLIST (Airborne Setup)

a. Select MLS-1

b. RTT CONTROL UNIT:

ON
DISC OFF
CAL OFF
SETUP ON
75 CAL
AZ

c. **RTT THEO AZ "0"**

DVM-RTT	**DVM-DIFF**
1. ADJUST RTT ZERO POT	1. ADJUST DIFF ZERO POT
2. DVM ± .001 VOLTS	2. DVM ± .001 VOLTS
3. RTT 5 IN BASELINE (RMS)	3. DIFF 6 IN BASELINE (RMS)

d. **RTT THEO AZ +1.0°**

DVM-RTT	**DVM-DIFF**
1. ADJUST RTT GAIN POT	1. ADJUST DIFF GAIN POT
2. DVM + .075 VOLTS	2. DVM - .075 VOLTS
3. RTT 2 IN LEFT (RMS)	3. DIFF 2 IN RIGHT (RMS)

e. **RTT THEO –1.0°**

DVM-RTT	**DVM-DIFF**
1. DVM -.075 VOLTS	1. DVM + .075 VOLTS
2. RTT 2 IN RIGHT (RMS)	2. RTT 2 IN LEFT (RMS)

f. **RTT THEO AZ "0"**

g. **RTT SETUP OFF**

h. **<u>DIFF TRACE DEFLECTS LEFT FOR RIGHT MLS MISALIGNMENT</u>**

i. **.05°/ LL @ 37.5 RMS SENS**

A8.24 MLS ELEVATION CHECKLIST (Airborne Setup)

a. Select MLS-1.

b. RTT CONTROL UNIT

ON
DISC OFF
CAL OFF
SETUP ON
75 CAL
EL

c **RTT THEO ELEVATION "0" DDM**

DVM-RTT	**DVM-DIFF**
1. ADJUST RTT ZERO POT	1. ADJUST DIFF ZERO POT
2. DVM ± .001 VOLTS	2. DVM ± .001 VOLTS
3. RTT 5 IN BASELINE (RMS)	3. DIFF 6 IN BASELINE (RMS)

d. **RTT THEO EL +0.30° (FROM REFERENCE ANGLE)**

DVM-RTT	**DVM-DIFF**
1. ADJUST RTT GAIN POT	1. ADJUST DIFF GAIN POT
2. DVM + .060 VOLTS	2. DVM - .060 VOLTS
3. RTT 1.6 IN LEFT (RMS)	3. DIFF 1.6 IN RIGHT (RMS)

e. **RTT THEO EL –0.30° (FROM REFERENCE ANGLE)**

DVM-RTT	**DVM-DIFF**
1. DVM -.060 VOLTS	1. DVM + .060 VOLTS
2. RTT 1.6 IN RIGHT (RMS)	2. DIFF 1.6 IN LEFT (RMS)

f. **RTT THEO EL "0" DDM**

g. **RTT SETUP OFF**

h. **<u>DIFF TRACE DEFLECTS RIGHT FOR HIGH MLS ANGLE</u>**

i. **.01875°/ LL @ 37.5 RMS SENS (for a calibration of .3° per 1.6 in)**
0.015°/ LL @ 37.5 RMS SENS (for a calibration of .3° per 2 in)

A8.25 Use the following manual procedures to analyze azimuth and elevation, alignment, **PFE, PFN,** and **CMN.**

a. **Approach Azimuth** – Evaluate the azimuth alignment error (MCE) by determining the arithmetic mean of all samples obtained **1 nautical mile** segment just prior to TH (1 nm from the missed approach point if the azimuth is offset or collocated). If the course is restricted within this segment due to excessive PFE, PFN, or CMN, determine the alignment in the 1 nm segment preceding the point at which the restriction occurs. Conduct azimuth RTT tracking to the maximum visual range to provide a reference for additional structure evaluation beyond 4 nm.

b. **Elevation –** Evaluate the elevation path for alignment error (MCE) by determining the arithmetic mean of all samples obtained in the segment from **Point "A" to Point "B".** If the path is restricted inside Point "A", evaluate the alignment segment from Point "A" to the point at which the restriction occurs.

c. **Definitions:**

(1) **PFE** – That portion of the guidance signal error that could cause aircraft displacement from the **desired (commissioned)** azimuth course or elevation angle.

(2) **PFN –** That portion of the guidance signal error that could cause aircraft displacement from the **Mean** azimuth course or elevation angle.

(3) **CMN** – That portion of the guidance signal error which could cause aircraft **control surface and column motion** while in coupled flight, but would not cause aircraft displacement from the desired azimuth or elevation.

A8.26 OTHER FACILITIES

a. **FMK.** Used to evaluate a maker beacon when it is not used in conjunction with an ILS.

b. **UHF-MB.** Used to evaluate UHF NDB(s), such as those used by the Navy and Marine Corps.

c. **Comm.** Used to evaluate UHF and VHF radio coverage in both radial and orbital mode. The pilot will fly the aircraft relative to the antenna being evaluated by using the FMS.

d. **NDB.** Used to evaluate beacons in both orbital and radial modes. The Mission Specailist may record the flight and advise the pilot when needle oscillation exceeds the tolerance. The Flight Inspection Pilot will confirm all out-of-tolerance oscillations by visual observation of the needle:

e. **VOT.** Used to evaluate VOR Test facilities.

f. DF. Can be used in either radial or orbit mode as follows:

(1) Transmit via radio to the DF facility.

(2) Immediately after transmitting, press the “FIX” key on the Mission Specialist’s keyboard.

(3) At the FIS prompt, type in the DF operator-provided bearing.

(4) Press the “ENTER” key on the Mission Specialist’s keyboard to remove the prompt from the VDU and automatically set-up for the next DF bearing.

NOTE: DF Bearing Error is provided on the VDU and in table format, listing each fix, in post-profile tabular data.

A8.27 ALTERNATE CAPABILITY UNIT

a. General. The Alternate Capability Unit (ACU) is normally used for "military unique" manual TACAN flight inspection. In this mode, the FIS computer is bypassed. All signals go directly to the printer/ plotter. Turning the printer/ plotter off, and then on, activates the ACU mode. The position estimation software is not used. Alignment accuracy is dependent on using an up-to-date map, correctly mounted on an azimuth plotting board and/or the theodolite.

b. The "theo" tone capability of the (ACU) is to be used only in conjunction with the TACAN Crosspointer Deviation, also from the ACU. The ACU traces are "real-time"; therefore, the theo trace from this unit is incompatible with the delayed TACAN traces from the FIS. The Group 1 tones are in correct time sequence with the FIS TACAN Crosspointer.

c. All signals provided to the ACU are uncorrected. Printer-plotter channel baselines and sensitivities are calibrated by avionics maintenance personnel to be the same as for FIS Auto.

d. ACU Printer / Plotter Signal Summary:

			Signal Range			Plot Range			
Label	**Signal Name**	**Units**	**Ref**	**LO**	**HI**	**B/L**	**LO**	**HI**	**Scale**
T1BD	Bearing Deviation	μA	0.0	0.0	150.0	3.0	1.0	5.0	75.0
T1SS	Signal Strength	dbm	-90	-90	-40	1.0	1.0	3.5	20.0
T1ID	FAC ID	-	-	none	tone	0.0	0.0	1.0	-
T1RM	Range Marks	-	-	-	-	12.0	12.0	11.5	-
T1FL	Flag	-	-	flag	valid	12.0	12.0	*	-
THEO	Theodolite	-	-	none	tone	0.0	0.0	12.0	-
T2BD	Bearing Deviation	μA	0.0	0.0	150.0	8.0	6.0	10.0	75.0
T2SS	Signal Strength	dbm	-90	-90	-40	8.0	8.0	10.5	20.0
T2ID	FAC ID	-	-	none	tone	0.0	0.0	1.0	-
T2RM	Range Marks	-	-	-	-	12.0	12.0	11.5	-
T2FL	Flag	-	-	flag	valid	12.0	12.0	*	-

*Valid Signal Components: 11.9 inches for bearing only
11.7 inches for range only
11.6 inches for bearing and range

A8.28 BAe-800 AFIS UTILITY FUNCTIONS

a. FIS DATABASE. This section discusses various database formats and procedures unique to the Sierra AFIS, and how they should be used to conduct flight inspection of various facilities.

(1) Databases for TACAN, DME, VOR, VOT, DF, COM, UHF, HB and FMK:

(a) Facility Type

(b) Facility ID

(c) Restriction Flag

(d) Facility Frequency

(e) Facility Elevation

(f) Magnetic Variation

(g) Latitude

(h) Longitude

(2) Instructions for Completion of Rho-Theta Type Data Base Forms:

(a) Enter Type Facility

(b) Enter Facility ID

(c) Enter “Y” if Restricted, or “N” if Unrestricted

(d) Enter Facility Frequency (Paired VOR Frequency for TACAN(s))

(e) Enter Facility Elevation

(f) Enter Magnetic Variation as + for East; - for West

(g) Enter Latitude of Antenna.

(h) Enter Longitude of Antenna.

(3) ILS Data Base:

(a) Facility ID

(b) Airport ID

(c) Runway Number

(d) Restriction Flag

(e) Facility Frequency

(f) Localizer Back Course Bearing

(g) Localizer Front Course Bearing

(h) Glideslope Elevation

(i) Localizer Elevation

(j) Facility Category

(k) Magnetic Variation

(l) Restriction Start

(m) Glideslope Cross Runway Offset

(n) Glideslope Published Angle

(o) Glideslope OM Dist

(p) Glideslope Localizer Dist

(q) Localizer Cross Runway Dist

(r) Glideslope Width

(s) Localizer Width

(t) Runway End Elevation

(u) Runway Length

(v) Runway True Bearing

(w) Threshold Elevation

(x) Glideslope Threshold Dist

(y) Glideslope Latitude

(z) Glideslope Longitude

(4) Instructions for Completion of ILS Data Base Form:

(a) Enter ILS

(b) Enter Facility ID

(c) Enter 4-Letter Airport Identifier.

(d) Enter RWY Number.

(e) Must be "NNN" for Correct FIS Analyzation.

(f) Enter Localizer Frequency.

(g) Enter Localizer Back-Course Bearing.

(h) Enter Localizer Front Course Bearing.

(i) Enter Glideslope Site Elevation (BFSL Aiming Point Elevation for Order 8240.47). Enter threshold elevation for a Localizer – Only facility.

(j) Enter Localizer Site Elevation.

(k) Enter Facility Category (1,2,3).

(l) Enter Magnetic Variation as + for East; - for West.

(m) Enter Distance from Start of Restriction to RWY Threshold. If No Restriction, Leave Blank. Asterisks (***) are an acceptable value if there is no restriction.

(n) Enter Distance from Glideslope to Center Line of RWY (+ For Right; - For Left). Enter "0" for Localizer-Only or “L0001” if BFSL is Being Applied.

(o) Enter Glideslope Published Angle. Enter a “0” for a Localizer – Only facility.

(p) Enter Distance from Glideslope to Outer Marker in feet. Enter “0.0” if Outer Marker is not present.

(q) Enter Distance From Glideslope to Localizer in Feet. Enter the distance from the localizer/ LDA to threshold for a Localizer-Only.

(r) Enter Localizer Offset Distance From RWY Centerline as + for Right and - for Left. If no offset, enter “0.0”.

(s) Enter Glideslope Width.

(t) Enter Localizer Width.

(u) Enter Elevation at Stop End of RWY.

(v) Enter RWY Length.

(w) Enter True Heading.

(x) Enter Threshold Elevation.

(y) Enter Glideslope to Threshold Distance; "0" if Localizer Only.

(z) Enter Glideslope Latitude; Use TH Latitude if Localizer Only. Use Aiming Point Coordinates for BFSL.

(aa) Enter Glideslope Longitude (See Z).

(5) PAR/ VASI Database:

(a) Facility Type

(b) Facility ID

(c) Airport ID

(d) Restriction Flag

(e) GP Intercept Elevation

(f) Magnetic Variation

(g) GS PUB Angle

(h) RWY End Elevation

(i) RWY Length

(j) RWY True HDG

(k) Threshold Elevation

(l) GP INT to TH Offset

(m) GP INT LAT

(n) GP INT LONG

(6) Instructions for Completion of PAR / VASI Data Base Forms:

(a) Enter Type of Facility.

(b) Enter Facility ID.

(c) Enter 4-Letter Airport Identifier.

(d) Enter “N” for Unrestricted, or “Y” for Restricted.

(e) Enter RWY: GPI (PAR) or RRP (VASI) Elevation.

(f) Enter Magnetic Variation as + for East or - for West.

(g) Enter Published Angle.

(h) Enter RWY Stop End Elevation.

(i) Enter RWY Length.

(j) Enter RWY True Heading.

(k) Enter Threshold Elevation.

(l) Enter GPI to Threshold (PAR) or RRP to Threshold (VASI) Distance.

(m) Enter RWY: GPI (PAR) or RRP (VASI) Latitude.

(n) Enter RWY: GPI (PAR) or RRP (VASI) Longitude.

A8.29. FIS PREFLIGHT CHECKS. The **Mission Specialist** should accomplish the following checks prior to take-off:

a. Apply 115VAC, 28VDC, and 26VAC to the FIS.

b. While waiting for the FIS to come on line, momentarily pull the #1 and #2 TACAN 115VAC circuit breakers. On both TACAN Display Units, ensure the range and bearing failure lights are ON.

c. Reset the circuit breakers.

d. On both TACAN Display Units:

(1) Set the OPERATE/ CAL switch to **CAL.**

(2) Set OBS CONTROL switch to **MANUAL.**

(3) BEARING DEGREES should indicate 000.0, ± 0.2.

(4) The **FROM** light should be ON.

(5) Select **15 HZ ONLY** on the BEARING select switch.

(6) BEARING DEGREES should indicate 9.0 - 11.0.

(7) Set OBS thumbwheel to **180.**

(8) The **"TO"** indicator light should be ON.

(9) Return all switches to their normal settings.

e. With the FIS "on-line", proceed to the Operational Verification screen.

f. Select Hard Disk Drive, then ENTER.

g. Select the "Perform Hard Disk Drive Verification" prompt, then ENTER.

h. Ensure the test passes.

i. Select the Printer Plotter from the Operational Verification menu.

j. Select the "Perform Printer Plotter Verification" prompt, then ENTER.

k. Ensure the test passes.

l. Select NAV RECEIVERS (ILS) from the Operational Verification screen.

m. Type in **<u>any</u>** ILS frequency for both receivers, then ENTER.

n. On the top of the Operator's Console, select and hold the #1 and #2 L/U toggle switch in the "UP" position.

(1) Primary and Secondary LOC Deviation should indicate approximately 90 μA **negative.**

(2) Primary and Secondary GS Deviation should indicate approximately 78 μA **negative**.

o. Select and hold #1 and #2 R/D toggle switch in the "down" position.

(1) Primary and Secondary LOC Deviation should indicate approximately 90 μA **positive.**

(2) Primary and Secondary GS Deviation should indicate approximately 78 μA **positive**.

p. If possible, select a local ILS frequency in the ILS Operational Verification screen. Compare LOC and GS deviation, modulation, and signal strength of both receivers

q. Select NAV RECEIVERS (VOR) from the Operational Verification screen.

r. Type in any VOR frequency, then ENTER.

s. Select VOR-1 and 2 on the RMI selector switch.

t. Activate and hold the #1 and #2 VOR Self Test switch.

(1) The VDU VOR Bearing should indicate 0.0 ± 0.4°.

(2) The RMI needles should swing to 358 - 002°.

u. Release the VOR Self-Test switches.

v. If possible, select a local VOR frequency in the VOR Operational Verification screen. Compare VOR bearing, modulations, and signal strength of both receivers.

w. Select the Marker Beacon Receiver from the Operational Verification menu.

x. Press the Marker Beacon Test switch down (located on the top of the Operator's Console. The OM, MM, and IM lights should light sequentially, and the Marker Beacon AGC VDU display should indicate approximately -30 when each beacon lights.

y. While the aircraft is taxiing, select “Altimeters and ADC” from the Operational Verification screen.

z. With the Laser Conditioning Switch and the Laser Key on, monitor the VDU laser altitude on takeoff.

aa. The VDU should display the aircraft's AGL altitude from 30 - 600 ft.

bb. If the display remains at zero, the laser is inoperative, disabling ILS-3, PAR, and airfield lighting approach modes.

NOTE: The laser will not fire at altitudes less than 30 ft; therefore, it is normally indicating "0" on the ground.

cc. From the FIS Main Menu, select "Facility Inspection".

dd. Select "FIS AUTO" from the cockpit.

ee. From the Facility Inspection menu, select a facility type within 300 nm of the aircraft.

ff. Follow the on-screen prompts until reaching the "En-Route Navigation Screen."

gg. Monitor the "POS" number on the lower right of the VDU.

hh. Within 5-10 seconds the POS should change to a number less than 1° and 1,000 feet.

ii. On the keyboard press "CURR DME".

jj. Ensure several facilities on the DME page have asterisks, indicating the FIS is multilaterating.

kk. On the keyboard press "Enter". A list of available satellites is shown.

A8.30 SIERRA AFIS GPS OPERATION. Prior to Flight:

a. ADADS powered - up.

b. FMS Initialized.

c. From the Operational Verification screen, select "GPS SENSOR UNIT".

d. Ensure the correct Sensor Operational Mode is displayed, as follows:

(1) 0 = Self – Test (Only stays in this mode for 5 seconds after "Power - On" condition.).

(2) 1 = Initialization (Hardware set-up for next mode).

(3) *2 = Acquisition (Sensor searching for satellites, collecting almanac if required, and fixing a position).

(4) 3 = Navigation (Normal operation; indicates a minimum of 4 satellites tracked, as in 3D).

(5) 4 = Altitude assisted navigation (3 satellites tracked; FMS providing altitude information to the sensor. Must reacquire a 4th satellite within 5 minutes, or a fault condition will occur).

(6) 7 = Fault (GPS is inoperative)

* Maximum Sensor acquisition time:
75 seconds with initialization data provided from the FMS.
10 minutes as a "stand - alone" unit.
90 seconds to reacquire satellites once interrupted.

e. Monitor the Dilution of Precision in both the vertical (VDOP) and horizontal (HDOP) plane:

Good "DOP(s)" are 1.0 - 2.0 (1.0 most accurate).
A good HDOP for flight inspection is < 2.8.

f. Monitor the Figures of Merit (VFOM and HFOM); this is the maximum (95% accurate) GPS accuracy, in meters. **A good HFOM for flight inspection is < 183 meters.**

NOTE: The DOP and FOM data is dependent on line-of-sight with the satellites. If poor DOP or FOM, ensure the Sensor is operational (an operational mode of 7 is not displayed), and recheck airborne.

g. From the Main Menu page, select "Database Management".

(1) Select "Set Molodensky Constants".

(2) Per the Airport/ NAVAID database product, select the applicable GPS Datum, only if directed by AVN-210. NAD83/ WGS84 coordinates are to be used for all commissioning flight inspections.

NOTE 1: NAD 83 is the default DATUM, and is used throughout the CONUS.

NOTE 2: If the datum is unknown, verify the correct datum with the host country, or other sources.

A8-31. AIRBORNE OPERATIONS

a. Select FIS AUTO mode (GPS data is available to ADADS in this mode **only.)**.

b. Enter the Flight Inspection En route screen of the first NAVAID scheduled for flight check (GPS will update ADADS positioning immediately; not limited to the 300 nm window as DME(s) are).

c. Press the "CURR DME/GPS" key.

(1) The screen is DME only data, unchanged from prior ops.

(2) Data will be available only if the aircraft is within the 300 nm window.

d. Press the "ENTER" key,

(1) Satellite data is now available.

(2) Determine sufficient satellites are available to do the mission (**minimum of 5 recommended for GPS-Only positioning).**

(3) Monitor the FOM and DOP data. Remember a **HDOP of < 2.8 and a HFOM of < 183 meters are recommended for flight inspection.**

e. Remain on the En route Screen until necessary to start a flight profile (allows maximum satellite and DME positioning inputs).

f. Periodically recheck DME and satellite accuracy via the "CURR DME/ GPS" key.

g. The "POS" value on the Real-Time screen reflects both DME and satellite combined position.

h. If satellite data disappears from the "CURR DME/GPS" screen, recheck the GPS Sensor Operational Verification page.

(1) A 7 Operational Mode number could indicate an inoperative Sensor.

(2) Less than 3 satellites tracked would also disable input to the ADADS.

(3) Flight Inspection will now have to be done via DME-Only or FIS Manual means.

(4) The only way to manually disable the GPS Sensor is to pull the CB, located in the cockpit (labeled GNSSU).

NOTE: The following GPS error codes will be displayed on the VDU for GPS abnormalities:

GPS: Maintenance Word 1 Critical Error.
GPS: Maintenance Word 2 Critical Error.
GPS: IRS/FMS is not present.
GPS: Operational Mode Fault.
GPS: Sensor is in Self-test mode.
GPS: Sensor is in Initialization mode.
GPS: Sensor is in Acquisition mode.
GPS: Sensor is not receiving data.
GPS: Fault, GNSSU unit is not operational.

A8.32 "BOOT FROM DISK" FLIGHT INSPECTION PROGRAM CHANGE

a. This modification relocates the program from EPROM chips to permanent hard disk. Initially, a tape is used to load the program; thereafter, it is automatically loaded to ADADS each time power is applied.

b. The operation of ADADS for any flight inspection profile is unchanged, except, if ADADS "lock-ups" are encountered or if hard drive errors occur:

(1) Place the flight inspection program tape in the tape drive.

(2) Remove, then reapply AFIS power.

(3) Once AFIS comes on-line (3-3.5 minutes) and the tape drive spools up, the F.I. program will automatically reload to the hard drive.

c. If hard drive and/or ADADS errors continue:

(1) Select "Database Management" from the Main Menu.

(2) Remove any tapes from the tape drive.

(3) Select "Format Disk" from the DB menu.

(4) Follow screen prompts until the hard drive is reformatted.

(5) Place the flight inspection program tape in the drive.

(6) Remove, then reapply AFIS power.

(7) Follow prompts to the F.I. screen.

(8) Select Database Management again.

(9) Place the FAA Facility Database tape in the drive, and wait for the drive to set-up the tape (about 1 minute).

(10) Select "Load/ Save Database from the screen option.

(11) When prompted, load both the FAA and Supplemental Databases from the tape.

(12) Once the screen indicates a satisfactory tape load, remove the tape from the drive.

A8.33. EMBEDDED TRAINING SYSTEM

a. The Embedded Training System (ETS), resident within the ADADS software, provides the operator the opportunity to simulate real-time operation of the AFIS. ETS allows the operator to perform simulated inspections for all facilities and profiles. During the simulated inspection, aircraft position and NAVAID signals are generated by the ADADS computer. This is based on information contained in the facility database and embedded training setup data entered by the operator (or default setup if the operator elects).

b. The ETS enables the Hawker to be utilized as a flight inspection simulator, complete with realistic VDU and plotter actions, without ever leaving the ground. With nothing more than a power cart, the Hawker becomes the perfect classroom. An instructor can set up an entire series of flight inspection profiles, complete with preplanned facility NAVAID irregularities. Once the trainee sits at the panel, he sees and analyzes all data real-time. In this manner, specific problem areas can be addressed and tailored to the needs of the student.

c. ETS is selected from the AFIS main menu. Selecting "Startup Profiles" allows the instructor to manipulate a profile. Selecting "Restore Default Parameters" will result in perfect alignment, angles, widths, etc., per entries in the FDB. A "0" will then appear in the data field.

d. Aircraft position, altitude, and direction of flight are also selectable from the same menu.

e. Each measurable facility parameter can be altered if desired. Some examples of this are as follows:

(1) ILS- - Low clearances can be induced by selecting a positive 100 - 110 μA bend at a negative azimuth/ 150 Hz side (example -20°). The duration of the bend should be at least 10° to look like an actual low clearance. The opposite indications would be true for low clearances in positive azimuth areas.

(2) ILS-3 - A 30 μA localizer bend located 0.5 nm from threshold, with a duration of 3,000 ft will result in 16 - 17 μA of structure. Negative localizer alignment results in reported right alignment. A 30 μA glide slope bend located at 2 nm from threshold, with a duration of 3,000 ft will indicate 26μA of zone 2 structure.

(3) RHO-THETA Radials - A -4.0° bend over 6,000 ft shows as a positive bend in the course.

f. TI 4040.25 details the operation of the ETS. The following are some unique features not covered elsewhere:

(1) There is no En route Screen. Once the profile is selected, the simulator starts. The operator must quickly press the Start/ Stop key to catch the entire run. When setting up the simulator, allow some additional aircraft track to compensate.

(2) The VDU and plots look exactly the same as during a facility inspection, except the word “Training” appears on the screen and the start of all plots.

(3) Pilot runway marks and laser inputs are automatic on an ILS-3. No action, other than AET inputs, is required.

g. Although mentioned at various locations in TI 4040.25, the following is a complete listing of unique keyboard entries for the ETS:

(1) CTL/ P - Simulates a pilot mark on the VDU and plotter (VP marks, etc.).

(2) CTL/ F or CTL-T - Simulates a FI mark.

(3) CTL/ R - Simulates a RWY Threshold event.

(4) CTL/ D - Stops/ Restarts the simulator, VDU, and the plotter. Allows the instructor or student to take the time to study a particular event as it occurs.

(5) CTL/ X - Simulates an aircraft right turn.

(6) CTL/ Z - Simulates an aircraft left turn.

(7) CTL/ A - Simulates an aircraft climb.

(8) CTL/ S - Simulates aircraft descent.

APPENDIX 9. AFIS OPERATIONS WITH DIFFERENTIAL GLOBAL POSITIONING SYSTEM (DGPS) TRUTH SYSTEM

TABLE OF CONTENTS

Paragraph	*Title*	*Page*
A9.1	INTRODUCTION	A9-1
A9.2	Z-MAX DGPS BASE OPERATIONS	A9-1
A9.3	AIRBORNE OPERATIONS	A9-5
A9.4	TROUBLESHOOTING	A9-6

APPENDIX 9. AFIS OPERATIONS WITH DIFFERNTIAL GLOBAL POSITIOINING SYSTEM (DGPS) TRUTH SYSTEM

A9.1 INTRODUCTION

a. Automated Flight Inspection Systems (AFIS) equipped with DGPS avionics (to include data radio communication and associated antennas and cabling) data-linked to a ground DGPS station are capable of achieving sub-meter positioning accuracy. A DGPS ground station (base) is utilized to transmit GPS corrections to the airborne DGPS unit (rover) resulting in a fixed real-time kinematic AFIS position solution.

b. DGPS positioning is acceptable for use in all flight inspection modes, providing the ground and airborne units are operated by trained flight inspection personnel.

c. Surveyed coordinates and the ellipsoid height of the base DGPS antenna are required for all flight inspection using DGPS. This data may be obtained from airport authorities or various NGS/ NOAA websites.

d. DGPS operations require deployment and recovery of the base-station and are not designed to replace TVPS or pilot-marked runway updates. The primary use of the system is when runway updates are impractical, as occurs when the designed procedural course is not in-line with the runway. For LDA with glide slope situations, offset ILS/ MLS, or point-in-space facilities, the DGPS is an excellent special-purpose AFIS truth system.

A9.2 Z-MAX DGPS BASE OPERATIONS

a. The base station must have an unobstructed view of the sky. Ensure the Z-Max base station has a charged 12VDC battery available, or AC power is present.

b. Erect the DGPS ground station, to include:

(1) Z Max DGPS

(2) DGPS Tripod

(3) UHF Data Radio

(4) Data Antenna

NOTE: In the following Z Max set-up procedure, a DGPS site elevation is required. This elevation is an *Ellipsoid* elevation, or the surveyed MSL value of the survey marker algebraically added to the *Geoid* height (provided in the NGS website).

There are several avenues to obtain the ellipsoid altitude of the surveyed marker:

- If an established airport survey marker is used, the ellipsoid altitude will be provided in the online data sheet for that geographic area.

- If the MSL altitude is provided there is an on-line utility to provide a geoid correction value for a given set of coordinates, called an undulation value. This value when algebraically added to the MSL altitude provides the required ellipsoid height. For coordinates in NAD83/WGS84 molodensky constant, use the following web address,

  http://www.ngs.noaa.gov/cgi-bin/GEOID_STUFF/geoid03_prompt1.prl

c. If this is the first Z-MAX use at a particular location, "**Reinitialize"** which deletes any old data.

NOTE: Errors have been detected that affect DGPS accuracy when the unit is moved from one location to another and it is not reinitialized.

d. Perform the following steps on the Ashtech Z Max DGPS ground station:

(1) Hold the power button down for 5 seconds.

(2) "REINIT" appears on the display. Wait for the display to return to main menu before continuing.

(3) Arrow to "Sessions"

(a) "Enter"

(b) Right error to "Stop Sessions"

(c) "Enter"

(4) Cancel to Top Menu

(5) Arrow to "Survey CONF." "Enter"

(6) Arrow to "Mode"

(a) "Enter"

(b) Arrow to "RTK Base"

(c) "Enter"

(7) Arrow to "Port/Type"

(a) "Enter"
(b) Arrow to "A"
(c) "Enter"

(8) Arrow to "DBEN". "Enter"

NOTE: Ports B and D are not used.

(9) Cancel up 1 menu to "REC INT"

(a) "Enter"
(b) Enter "001.0 sec"
(c) "Enter"
(d) Arrow to "ELEV Mask"
(e) "Enter"
(f) Enter "10 degrees"
(g) Arrow to "RTK Base"
(h) "Enter"

(10) Cancel up to main menu

(11) Arrow to "Survey RTK Base"

(a) "Enter"
(b) Arrow to "ANT HT"
(c) "Enter"
(d) Enter 0.0.

This option allows the user to input the height of the DGPS antenna above the surveyed mark; however, the height cannot be verified by the rover unless it is added to the site elevation.

(e) Arrow to "ANT RAD"
(f) "Enter"
(g) Enter 0.0

(12) Arrow to "Base POS"

(a) "Enter"

(b) Arrow to "LAT"

(c) "Enter"

(d) Enter coordinates

(e) Arrow to "LON"

(f) "Enter"

(g) Enter coordinates

(h) Arrow to "ALT"

(i) "Enter"

(j) Enter Ellipsoid height, including DGPS antenna height, if an antenna height of 0 was entered for "ANT HT"

(13) Cancel up to main menu

(a) Arrow to "SETTINGS"

(b) "Enter"

(c) Arrow to "BAUD RATE"

(d) "Enter"

(e) Arrow to "38.4 kbaud"

(f) "Enter"

(g) Arrow to "SAVE"

(h) "Enter"

(i) "Displays indicates "SAVE?"

(j) "Enter"

(k) Display indicates "Done"

A9.3 AIRBORNE OPERATIONS

a. Confirm the DGPS ground station is present and located at an accurately surveyed point. Verify with the DGPS operator the surveyed coordinates and Ellipsoid height the DGPS is transmitting.

b. On the "DME FIX" Page:

(1) Verify the "GND STN" coordinates and altitude are those of the DGPS ground station. This information is transmitted from the Base Station to the aircraft.

NOTE: The altitude is shown in feet, and the DGPS transmits the altitude in meters.

1 Meter = 3.2808399 ft.

(2) Perform a sanity check by verifying the aircraft's static position indicated by the DGPS coordinates is valid; close to the Hybrid position.

c. On the I/O DGPS Page, Verify:

(1) Ground LAT/LON/HEIGHT are the transmitted DGPS coordinates and height, (this time in meters).

(2) Sufficient satellites are in use by the airborne "Rover DGPS unit

(a) The first 3 lines of the satellite info (SAT SV, AZ, EL, and S/N) indicate the airborne unit is functioning autonomously as a GPS sensor.

(b) The "Used" field displays a "U" if the satellite is used for both the airborne and base DGPS units. It's a good sign the DGPS link is active and is only displayed when the DGPS position solution is in "Float" or Fixed RTK"

(3) The other two sets of coordinates are always the same and indicate current aircraft position.

(4) With the DGPS base station deployed and active, the "RAW/DIFF POSITION should be in either "FLOAT" or "FIXED RTK" with the aircraft on the ground and in line of site with the base station. Make every attempt to obtain "FIXED RTK" or "FLOAT" prior to takeoff.

"AUTONOMOUS" positioning indicates no link between base and rover DGPS.
"INVALID" indicates an inoperative airborne DGPS unit.

d. DGPS positioning is used when the "FINAV" mode is toggled to "DGPS", on the DME FIX page. Each time a different profile is selected on the "MISC SERV" page, the FINAV mode must be re-toggled to DGPS.

e. The bottom right of every INSP CTL page indicates DGPS status and the FINAV mode.

f. Non-Approach modes (Rho-Theta, etc) are affected with DGPS positioning by the facility error traces reacting in real-time to the DGPS accuracy; the DGPS operation is transparent.

g. In approach modes such as ILS, MLS, PAR/PAPI, the inspection results are affected by DGPS after the aircraft reaches the runway, via the post-profile traces.

(1) Runway marks are not used or needed since the facility error is computed real-time, and the end of the runway simply signals AFIS that Zones 4 and 5 are recorded.

(2) **If Zones 4 and 5 are not needed** (offset LDA, ILS) the runway length can be shortened to a minimum of 2,000 ft to expedite run completion. Runway lengths less than 2,000 ft affected Zone 3 in early software testing and are not recommended.

Over-flight of the threshold and runway ends is not required if Zones 4 and 5 are not measured. AFIS will stop the run when the plane containing the runway end (per RWY length in the FDB) is passed. The aircraft can remain on the offset facility designed procedural course.

A9.4 TROUBLESHOOTING

a. If the base DGPS is not transmitting the correct surveyed data, as verified on the DME and I/O pages, reset the NCU toggle switch. This causes AFIS to dump any existing DGPS data and re-look to the DGPS for positioning. If the problem persists, re-initialize the base DGPS.

NOTE: If the correct base DGPS base coordinates cannot be verified on these pages, do not fly.

b. If the DGPS position ever goes to "Autonomous", there is no RTK solution; the base and airborne DGPS are not communicating. The AFIS positioning will be no better than standard GPS. Attempt to gain line of site (expect 25nm DGPS coverage) with the base DGPS.

(1) The base DGPS uplink is transmitted on 329 MHz. Listen to the UHF audio and/or use the spectrum analyzer to verify the base station is transmitting. If the base DGPS is transmitting, it is an indication of a healthy base station. It will not uplink GPS corrections if the base station is faulted.

(2) During DGPS testing, with the aircraft on the ground and in line-of-site of the DGPS ground unit, an "Autonomous" solution was encountered on rare occasions. A "Fixed RTK solution was obtained by removing the DGPS station from the tripod and, while still powered on, the antenna was shielded from satellite coverage by pointing the unit at the ground for just a few seconds.

> **NOTE:** The DGPS can display a "FIXED RTK" position even though the base station is set up at the wrong surveyed checkpoint, or if the coordinates entered into the base station are not those of the geographic location of the base unit. If either of these situations occur and the coordinates transmitted are within 500 yards of the actual geographic location, a faulty FIXED RTK position can be obtained. The AFIS position will be in error and penalize the facility under test.

c. If the DGPS position indicates "FLOAT" it still provides accuracy to within a meter. Do not terminate a check for this condition but attempt to fly close to the airfield containing the base station. Normally the position will then revert back to "FIXED RTK". Execute "Output Messages" then "Send All" on the DGPS I/O page to electronically reset the airborne DGPS.

APPENDIX 10. GENERAL OPERATION PROCEDURES

TABLE OF CONTENTS

Paragraph *Title* *Page*

A10.1 INTRODUCTION A10-1

A10.2 FORMULAS COMMON TO FLIGHT INSPECTION A10-8
a. Constants A10-8
b. Rounding A10-8
c. Time Average A10-9
d. Conversion of Knots to Feet per Second A10-9
e. Radio Line of Sight A10-9
f. Earth Curvature A10-9

A10.3 TABLES AND SUPPLEMENTAL INFORMATION A10-10
Table 10-1 ..... A10-10
Table 10-2 ..... A10-11
Table 10-3 VOR/ LOC Antenna Normalization A10-12
Table 10-4 Antenna Gain Factors A10-12
Table 10-5 dBm to Microvolt Conversion A10-13

This Page Intentionally Left Blank

APPENDIX 10. GENERAL OPERATION PROCEDURES

A10.1 INTRODUCTION. This chapter applies to all aircraft in the FAA flight inspection fleet. It provides basic guidance to cover flight inspection systems and procedures that are presently in use.

a. There are two basic types of flight inspection systems, the Sierra and the NXT. The NXT system is currently being upgraded to the MILTOPE display system. Operating instructions for the NXT flight inspection system are contained in the NXT Automatic Flight Inspection System Manual (T.I. 4040.55, AFIS Mission Specialist, or T.I. 4040.56, AFIS Pilot). Standard terminology is used to help establish a common work base. Some aircraft have been modified with the new MILTOPE computer, display, and program. The operation of the flight inspection function has minor changes; the new system enhancements will be covered below. The basic procedures for the NXT System are used throughout this manual.

(1) Initialization. The pilot will ensure the aircraft is initialized to the coordinates of where it is physically located. Accomplish this either by using the coordinates recorded prior to engine shutdown, or the coordinates received from GPS. Using the airport reference point coordinates should be used only as a last resort.

(2) LR-60, CL-601. These systems have a Tone Decoder Interface Unit mounted in the equipment bay across the aisle from the Mission Specialist workstation. The primary function is to provide an along-track mark every 0.1 and 1.0 nm from the global Positioning Inertial Reference Unit (GPIRU) sent to the printer/plotter. The tone decoder interface combines the co-pilot runway update/ event, Mission Specialist event, and the 1020 Hz theodolite tone (from #3 VHF), generating an audio tone over the intercom system and a mark on the printer/plotter.

(3) MILTOPE. This system will be installed in all aircraft according to aircraft schedule. The track ball on the keyboard or a discreet track ball may be used with this system. A cursor can be moved around the display using a track ball; clicking the proper button allows the scratch pad to become active wherever the cursor is placed. MILTOPE-equipped aircraft have the capability to save new facility data or modified data not found in the AFIS database for later retrieval.

(4) RTT. RTT capability is available in the BAe-800 and CL-601 equipped with the MILTOPE panel. All Sierra-equipped Hawkers are RTT capable. RTT procedures for Sierra are described in Appendix 8 of this manual. Procedures for MILTOPE RTT calibration can be found in Appendix 7 of this manual.

(5) Radio Frequency Interference (RFI). This equipment is installed in some of the aircraft, system operations are explained in Chapter 23 of this manual.

(6) Navigational Aids Signal Evaluator (NASE). This equipment is temporarily installed in aircraft when it is needed to support Airway Facilities

(7) Microwave Scan Beam Landing System. The MSBLS is a precision approach and landing system that provides slant range, azimuth, and elevation data to NASA's Shuttle Orbiter during terminal area energy management, approach, and landing phases of the Shuttle at CONUS based End of Mission and Transatlantic Abort Landing sites in Spain, Morocco, and France. Detailed operations procedures and special aircraft requirements are in Chapter 3 of this manual.

(8) LR60 VOR. There is a difference in course sensitivity between the cockpit and AFIS VOR receivers in the Lear. Lear crews will rely on AFIS as the standard for VOR structure determination. Any rapid course deviations that appear on the cockpit VOR receiver should be compared with AFIS for magnitude and flyability determination.

b. The Sierra flight inspection system is significantly different from the NXT and requires different pilot and Mission Specialist procedures. The equivalent Operational Procedures for the BAe-800 are contained in Appendix 8 of this manual. Additional detailed instructions are contained in T.I. 4040.25.

c. The following tables are to assist the flight inspection crew in assuring proper equipment configuration. This information is loaded by maintenance, and it should not be necessary for the Mission Specialist to modify.

(1) In normal operation, the antenna is defaulted to the required antenna for the flight inspection mode entered. Use Table A to verify that the proper antenna is selected for flight inspection mode. Antenna selection is controlled on the Plot Control Page.

(2) Aircraft dimensions information is displayed on the System Setup Page in AFIS. This information is loaded by maintenance, and it should not be necessary for the Mission Specialist to modify. See Table 10-2.

(3) The VOR/ LOC Antenna Normalization Table is used to balance received signals of selected system. This information is loaded by maintenance, and it should not be necessary for the Mission Specialist to modify. See Table 10-3.

(4) The Antenna Gain Factor Table is the same for all NXT equipped aircraft. Antenna Gain Factors are entered to compensate for signal loss within the aircraft. A plus value means there is attenuation in the airplane, and all signal strength values will be increased a corresponding amount to represent outside world values. Plots on the printer/plotter are only updated at the next power-up or at the next mode change. Information is loaded automatically during a program load and does not normally require revision. See Table 10-4.

d. Software and Equipment Self-Test

(1) The Mission Specialist must ensure the current and correct RNAV and Flight Inspection System (FIS) software versions are installed in the aircraft (current software revision is found as PGM on the SERVICE PAGE).

The Mission Specialist must ensure the current calibration data is correct and resident in the AFIS prior to flight. The following pages must be printed and archived with the first recordings on the first day of itinerary.

(a) System Setup

(b) TVPS

(c) VTAC Facility Data (Receiver Calibration)

(d) MISC SERV (AFIS Software Revisions, Crew, Date, etc)

(e) Self Test Results

(f) Printer Test results

(2) A complete self-test of the flight inspection equipment will be performed prior to each sortie. The results will be printed and filed with the recordings of the first inspection of the sortie. Annotate on the MISC SERV page in the "Self Test Fac" field the ID and facility type for the inspection about to take place (i.e. ABC VTAC). On subsequent inspections, print the MISC SERV page to indicate where the self-test results can be found for that sortie

e. Database Management

(1) The operator cannot permanently change the AFIS database; however, the facility data for the facility being inspected may be temporarily modified. The Mission Specialist will compare the stored data with a current AVNIS data sheet prior to starting the inspection. Glide slope, PAR, and VGSI latitude and longitude: tolerance of ± .05 seconds is acceptable due to rounding. If other aircraft data does not match the AVNIS data sheet, use the AVNIS data sheet information and notify Resource and Data Management. An AFIS printout of the data used for the inspection will be filed with the recordings.

(2) The Loader/ Logger (L/ L) must be used for retrieval of the Final Approach Segment (FAS) Data Block used for LPV Approaches. The data will be compared to procedure form FAA 8260-10 during commissioning inspections. The L/ L must be used to collect and log all Flight Inspection data during LPV type approaches and DME-DME type inspections.

(3) A supplemental database is available through the Data Logger drive. Modified data or new facility data may be saved and retrieved from the disk when the Supplemental Database is activated on the Flight Inspection Facility Data Page.

f. Data Recording

(1) The following Display pages will be printed and recorded with each facility type inspection. Any time a change is made to these pages, the changed page must be printed.

(a) SERVICE PAGE. This will indicate which inspection mode is selected, the crew names and crew numbers, Aircraft tail number, which facility the Self-Test results are located, and the Data Logger status.

(b) FI FACILITY DATA. This displays what data is used for NCU inputs and calculations.

(c) PLOT CONTROL PAGE/ PAGES. This page(s) shows which traces are used, their baselines, and sensitivity. Normally, the default plotter traces are used.

(d) NAV/TEST CONTROL PAGE(S). This page(s) provides the control and monitoring functions. See T.I. 4040.55 and T.I.4040.56 for a detailed description for each mode of operation. This page is automatically printed when AFIS sensors meet required parameters or when STOP command is executed using EXEC CMD function.

(e) Print any other pages that may be beneficial in analyzing facility performance or aircraft condition.

(2) Printer Plotter Annotation: Full utilization of the Annotate Plot feature is recommended; however, manual annotation may be necessary. There should be adequate information to duplicate the flight inspection report by someone who was not on the itinerary.

(a) Annotate the recordings with the run number sequence, transmitter number, and configuration. Also include any information that will be helpful in analyzing the recorded data.

(b) Identify the purpose of every event mark.

(c) Annotate all manual analysis.

(3) Alert Page. This page provides information of system or inspection out-of-tolerance conditions during an inspection. This page may be printed to help in analyzing facility and system problems.

g. Aircraft Communication

(1) Left-Seat Pilot:

ATC	Primary
Interphone	Primary
FI Air/Ground	Secondary

(2) Right-Seat Pilot:

ATC	Primary
Interphone	Primary
FI Air/Ground	Secondary

(3) FI Mission Specialist :

ATC	Secondary
Interphone	Primary
FI Air/Ground	Primary

h. Aircraft Positioning. Positioning of the aircraft is critical to the data collection process. Close attention must be given to minimize crew induced positioning errors.

(1) Initialization. Although the Navigation Computer Unit (NCU) can refine its positioning, the positioning reference of the Inertial Reference Unit (IRU) will never be better than the accuracy of the location of the aircraft relative to the coordinates used for initialization.

(2) Prior to flight, the IRU will be initialized to known coordinates of where the aircraft is located on the airfield, either stored or manually entered. The hybrid update mode must be used during initialization. If a backup is required, perform the following procedure. Using the CHANGE AIRPORT function, enter the four-letter airport code to find the airport coordinates corresponding to the first runway threshold found in the database. If they are not found, use LAT/ LON function to manually enter the airport reference point coordinates or other known coordinates at the airport. The aircraft should be parked as close as practical to these coordinates during initialization. The difference between the aircraft position and entered coordinates will become apparent as soon as updating begins; a 1nm error is typical, but the error may be greater at larger airports.

(3) NCU Continuous Updating: The NCU must have real-time updating during operations. This is achieved by several methods, automatic and manual. The primary NCU update is automatic through the HYBRID GPS mode. However, three pilot selectable DME modes are available. Differential GPS is also available for specific types of flight inspections.

(a) Hybrid Mode (HYBRID). This is the preferred mode for flight inspection and may be used for en route operations. It uses both Inertial Sensing System (ISS) and GPS information for updates.

PARAMETERS	EXPECTED VALUE
HDOP	1.0-4.0
VDOP	1.0-4.0
HFOM	Less than 22 meters
Satellites in View (PRN)	5 minimum
SNR	30db/ Hz minimum
DME (Supported Waypoint)	Minimum –80dbm

(b) Differential Global Positioning System Mode (DGPS) may be used when available and/or required for the type of flight inspection mission assigned. AFIS DGPS is supported by a ground station located on or near the facility under test. DGPS does NOT use any manual runway updates. TVPS or Pilot updates are NOT needed; AFIS will automatically correct the data when the aircraft crosses threshold (no entry required).

(c) FLIGHT INSPECTION Mode (FI-DME). AFIS automatically selects up to 6 DME stations located around the facility under test. DME station error needs to be closely monitored. A DME with a station error of 0.2 nm or greater should not be used for flight inspection. AFIS may not select the most suitable stations for positioning. When this occurs, Manual DME Mode (MN-DME) is appropriate. Optimum geometry between any two DME is 90°. Adequate positioning can usually be achieved if the system is using two or more acceptable DME with 60° to 120° bearing difference. Manual updating is used when there are inadequate DME stations for positioning.

(d) RNAV DME Mode (RN-DME). This mode may be used during en route flight. It may also be used for flight inspection during coverage and airway checks when station alignment was determined using FI-DME or MN-DME. FI-DME Mode is limited to using DME near the facility under test. Position accuracy is lost when using FI-DME over long distances. MN-DME is usable if the positioning DME are updated with stations off the nose of the flight inspection aircraft.

(e) DME Manual Select (MN-DME). This mode may be used to improve DME updating by manually inserting or removing positioning DME(s) with an error of 0.2 nm or greater. When this mode is used for flight inspection, the stations selected should be noted in Remarks of the AVNIS Data Sheet for future use.

(4) Manual Update. When manual updates are used, the NCU and DME must be disabled. Manual updates can only be executed from the pilot CDU. For manual updating, the aircraft must be positioned precisely over the checkpoint at a low enough altitude (usually 500 ft AGL) to ensure accuracy.

(a) To update over the facility being inspected, select FIX, then FI FAC on the pilot CDU. Fly over the facility and press "EXECUTE". If the facility being selected is an ILS, update over the Localizer antenna

(b) To update over a known checkpoint other than the facility, enter the coordinates through the FIX button, then LAT/LON buttons. Press "EXECUTE" when over the checkpoint. Good coordinates for manual updating are runway ends or another NAVAID. At islands or other locations where visual checkpoints are nonexistent, coordinates can be computed on a localizer centerline if a DME source within 23° of the centerline is available.

(5) NCU Reliability Factors. Radio Altimeter Error (RA ERR) displayed on ILS-3 and MLS-3 NAV/TEST CTRL Page 1 of 4 is a bias number applied to the radio altimeter vertical fix values used for computations. The RA ERR is established during the RA Self-Test: Lear 60 or Challenger 601 may be 4 ft or less; BE-300 or Bae-800 NXT AFIS equipped 5 ft or less. If Vertical Accelerometer Bias (VABias) is greater than 2000µgs, flight inspection operations must be terminated until cause can be found and corrected. VABias must be monitored during flight inspection operations; any changes greater than 200µgs during a sortie could indicate NCU problems. The Mission Specialist should pay special attention to data collected.

(6) NCU Position Update. May be necessary when the IRU S/D deviation is greater than 2 nm and flight inspection results are suspect. The NCU position can be updated in flight to a specific FIX or facility through the pilot's CDU FIX pages. The procedure for this function is found in T.I. 4040.56, section 4.8.

A10.2 FORMULAS COMMON TO FLIGHT INSPECTION. The following formulas and methods of calculation are presented as a ready reference. The following information is of a general nature, and use of it may be applicable to more than one flight inspection operation.

a. Constants Used in this Order. Following is a list of constants used in this order. Others are unique to a particular formula and can be found in reference material concerning the subject.

CONSTANT	DEFINITION/ DERIVATION
6076.1	Feet per nautical mile
3600	Seconds per hour
106	tan 1° (6076.1)
0.00943	$\frac{1}{\tan 1^{\circ}(6076.1)}$
0.0159	$\frac{6076.1}{(3600)(106)}$
0.592	$\frac{3600}{6076.1}$

b. Rounding. Measurements and calculations should be carried to one decimal place more than that required for tolerance application. Then apply the following criteria to round off a measurement.

Numbers 1 to 5 - round off to zero
Numbers 6 to 9 - round off to the next higher value.

Example: Glidepath Course Width:
$0.755^{o} = 0.75^{o}$ and $0.756^{o} = 0.76^{o}$

Exception: When a value exceeds a tolerance, it should not be rounded off to an in-tolerance condition.

Example: Glidepath Course Width: $= 0.903^{o}$ is out of tolerance.

c. Time Average

$$T_{av} = \frac{2(T_1 \times T_2)}{(T_1 + T_2)}$$

Where:

T_{av} = Time average
T_1 = Time to cross in one direction
T_2 = Time to cross in opposite direction

d. Conversion of Knots to Feet per Second

$$V = \frac{6076.1 \times V_k}{3600}$$

Where:

V = Velocity (ft per sec)
V_k = Velocity (knots)

e. Radio Line of Sight

$$D = 1.23\ (\sqrt{H_r} + \sqrt{H_t})$$

Where:

D = Radio Line of Sight Distance (nm)
Hr = Height of receiving antenna (ft)
Ht = Height of transmitting antenna (ft)

f. Earth Curvature

$$Ec = (D)^2(0.883)$$

Where:

Ec = Earth Curvature (ft)
D = Distance from a point (nm)

A10.3 TABLES AND SUPPLEMENTAL INFORMATION

Table 10-1
Normal Antenna Positions

MODE	B300				LEAR 60			
	SYS A	SYS B	SYS C	ANT	SYS A	SYS B	SYS C	ANT
VOR								
RADIN	VL1	TAC	OFF	N/A	VL1	TAC	OFF	AFT(2)
RADOUT	VL1	TAC	OFF	N/A	VL1	TAC	OFF	AFT(2)
ORBIT	VL2	TAC	OFF	N/A	VL1	TAC	OFF	AFT(2)
TACAN								
RADIN	VL1	TAC	OFF	BA(3)	VL1	TAC	OFF	BA(1)
RADOUT	VL1	TAC	OFF	BA(3)	VL1	TAC	OFF	BA(1)
ORBIT	VL2	TAC	OFF	BA(3)	VL1	TAC	OFF	TA(1)
DME	N/A	N/A	OFF	N/A	N/A	N/A	OFF	N/A
ILS								
ILS-1	VL1	VL2	OFF	N/A	VL1	VL2	OFF	AFT(2)
ILS-2	VL1	GS1	OFF	N/A	VL1	GS1	OFF	AFT(2)
ILS-3	VL1	GS1	OFF	N/A	VL1	GS1	OFF	FWRD(2)

MODE	CL 601				BAE 800			
	SYS A	SYS B	SYS C	ANT	SYS A	SYS B	SYS C	ANT
VOR								
RADIN	VL1	TAC	OFF	FWRD(2)	VL2(4)	TAC1	OFF	FWRD(2)
RADOUT	VL1	TAC	OFF	AFT(2)	VL2(4)	TAC1	OFF	AFT(2)
ORBIT	VL1	TAC	OFF	AFT(2)	VL2(4)	TAC1	OFF	AFT(2)
TACAN								
RADIN	VL1	TAC	OFF	BF(1)	VL2(4)	TAC1	OFF	TF(3)
RADOUT	VL1	TAC	OFF	BA(1)	VL2(4)	TAC1	OFF	BA(3)
ORBIT	VL1	TAC	OFF	BA(1)	VL2(4)	TAC1	OFF	TA(3)
DME	N/A	N/A	OFF	N/A	N/A	N/A	OFF	N/A
ILS								
ILS-1	VL1	VL2	OFF	AFT(2)	VL1	VL2	OFF	AFT(2)
ILS-2	VL1	GS1	OFF	AFT(2)	VL1	GS1	OFF	AFT(2)
ILS-3	VL1	GS1	OFF	FWRD(2)	VL1	GS1	OFF	FWRD(2)

1. **TACAN antenna selection is a manual function from the cockpit.**
2. **Forward/ AFT VOR/ LOC antenna selection on the Lear, Challenger, and BAe-800 Aircraft to be controlled via NCU O/G output discrete.**
3. **TACAN antenna selection is a manual function from the inspector's console.**
4. **VL1 and TAC1 cannot be simultaneously displayed on the RMI; VL2 and TAC1 can be displayed on the RMI**

Table 10-2
Aircraft Dimensions

A/C Dimension	L60	CL601	BAe800	B300
ACDLN47	019.2	014.3	027.5	012.0
ACDLN41	-031.6 note	014.3	027.5	-022.0
ACDLN24	-002.5	026.3	-010.0	004.5
ACDLN48	009.2	004.3	026.4	003.0
ACDHT07	002.8	006.5	003.6	004.0
ACDHT08	008.8	11.4	006.6	009.0
ACDHT48	005.5	008.0	001.5	005.0
ACDLN49	001.4	-007.1	***.*	-007.0
ACDHT09	008.9	11.7	***.*	11.7
ACDHT49	005.6	007.0	***.*	007.0
ACDLN45		11.8		
ACDHT05		006.9		

ACDLN47 Distance from IRU #1 to Glide Slope (GS) antenna (+ for GS antenna forward of IRU)
ACDLN41 Distance from IRU #1 to Localizer (LOC) antenna (- for IRU forward of LOC antenna) (See NOTE)
ACDLN24 Distance from Radio Altimeter antennas to IRU #1 (+ for IRU forward)
ACDLN48 Distance from IRU #1 to forward MLS antenna (+ for MLS forward of IRU)
ACDHT07 Height of Glide Slope antenna above the ground with the aircraft level and weight on wheels
ACDHT08 Height of forward MLS antenna above the ground with the aircraft level and weight on wheels
ACDHT48 Height of forward MLS antenna above the IRU #1 (+ for MLS antenna above IRU)
ACDLN49 Distance from IRU #1 to DGPS antenna and or WAAS antenna (+ for GPS antenna forward of IRU)
ACDHT09 Height of DGPS antenna and/or WAAS antenna above the ground with aircraft level and weight on wheels
ACDHT49 Height of forward DGPS antenna and/or WAAS antenna above IRU #1 (+ for GPS antenna above IRU)
ACDLN45 Distance from IRU #1 to MSBLS antenna (+ for MSBLS antenna forward of IRU). This dimension scratchpad is active and displayed when A/C is CL601 and MSBLS Availability Flag is toggled to “ENABLE”
ACDHT05 Height of MSBLS antenna above the ground with aircraft level and weight on wheels. This dimension scratchpad is active and displayed when A/C is CL601 and MSBLS Availability Flag is toggled to “ENABLE.”

NOTE: The Lear 60 ACDLN41 dimension will change to +19.7 to match the antenna selection logic.

Table 10-3
VOR/ LOC Antenna Normalization

	B300	**L60**	**CL601**	**BAe 800**
Bearing	dB	dB	dB	dB
0	+5	+5	+4	-4
30	+7	+7	+4	+4
60	+3	+6	+4	+5
90	+4	+1	+4	0
120	+3	+1	+4	0
150	+4	0	+5	+5
180	0	0	+4	0
210	+1	+2	+4	+6
240	+3	0	+4	+2
270	+6	0	+4	0
300	+3	+4	+4	+4
330	+2	+6	+4	+5

Table 10-4
Antenna Gain Factors

VOR/ LOC	+00dB
GS	+00 dB
TACAN	+06 dB
MLS-FWD	+00 dB
MLS-AFT	+00dB

Table 10-5
dBm to Microvolt Conversion

dBm	µVolts		dBm	µVolts		dBm	µVolts
-27	10000.0		-54	446.7		-81	20.0
-28	8912.5		-55	398.1		-82	17.8
-29	7943.3		-56	354.8		-83	15.8
-30	7079.5		-57	316.2		-84	14.1
-31	6309.6		-58	281.8		-85	12.6
-32	5623.4		-59	251.2		-86	11.2
-33	5011.9		-60	223.9		-87	10.0
-34	4466.9		-61	199.5		-88	8.9
-35	3981.1		-62	177.8		-89	7.9
-36	2548.1		-63	158.5		-90	7.1
-37	3162.3		-64	141.3		-91	6.3
-38	2818.4		-65	125.9		-92	5.6
-39	2511.9		-66	112.2		-93	5.0
-40	2238.7		-67	100.0		-94	4.5
-41	1995.3		-68	89.1		-95	4.0
-42	1778.3		-69	79.4		-96	3.5
-43	1584.9		-70	70.8		-97	3.2
-44	1412.5		-71	63.1		-98	2.8
-45	1258.9		-72	56.2		-100	2.5
-46	1122.0		-73	50.1		-101	2.2
-47	1000.0		-74	44.7		-102	2.0
-48	891.3		-75	39.8		-103	1.8
-49	794.3		-76	35.5		-104	1.6
-50	707.9		-77	31.6		-105	1.4
-51	631.0		-78	28.2		-106	1.3
-52	562.3		-79	25.1		-107	1.1
-53	501.2		-80	22.4		-108	1.0

This Page Intentionally Left Blank

APPENDIX 11. WORKSHEETS AND TOLERANCES

TABLE OF CONTENTS

Paragraph	*Title*	*Page*
A11.1	INTRODUCTION	A11-1
A11.2	NDB FLIGHT INSPECTION WORKSHEET	A11-2
A11.3	PAR WORKSHEET	A11-3

This Page Intentionally Left Blank

APPENDIX 11. WORKSHEETS AND TOLERANCES

A11.1 INTRODUCTION. This appendix contains quick reference guides for flight inspection crews, either in the form of a worksheet that can be used to track inspection progress, and/or a simple list of tolerances from FAA Order 8200.1.

NDB FLIGHT INSPECTION WORKSHEET

	C	P	Antenna Change (3)	Frequency Change
IDENT	X	X	X	X
Voice	X	X	X	X
Coverage Orbit	X		X	X
Routes & Transitions	X	(1)	(4)	(1)
SIAP(s)	X	(2)	(2)	(2)
Station Passage	X	X	X	X
Standby Transmitter	X			
Standby Power	X			

(1) Surveillance only incidental to other required checks.

(2) Final approach segment only.

(3) Required for change in antenna type, or mods are made to antenna or ground plane, or change in antenna current designed to change coverage area.

(4) Fly any airways, routes or transitions and reevaluate any associated ESV(s).

FI IDENT _____
Morse Code Ident _____
Freq _____ Voice? _____
TX (Dual or Single?) _____

CLASS	Range	2/3
Compass Locator	15 nm	10 nm
MH Facility	25 nm	16.7 nm
H Facility	50 nm	33.3 nm
HH Facility	75 nm	50 nm

Ident: Morse code or voice ident correct, clear, and identifiable throughout the area of intended use, including ESV(s).

Voice: Clear and recognizable for a minimum of 2/3 NDB class usable distance. Note effective range on commissioning. Anytime less than required distance notify maintenance. Don't restrict the facility for voice coverage. Remove if interferes with coded ident (except live voice).

Coverage Orbit: Fly at reduced power level as determined by maintenance. Altitude 1,500 ft above site, or min altitude that provides 1,000 ft (2,000 ft in designated mountainous areas) above intervening terrain or obstacles, whichever is higher. Permissible to alternate transmitters for dual transmitter facilities.

Airways, Routes and Transitions. Fly at min altitudes and max distances as required by the procedure. Bearing deviation tolerance is ±10°, (holding patterns and approaches are ±5°).

ESV(s): Coverage at greater than the orbital distance for specific fixes, airways, routes, or transitions, may be evaluated on one transmitter. Establish at normal power.

SIAP(s). Fly in direction of use. Descend 100 feet below the MDA and all stepdown fixes after the FAF or PT altitude. During periodic inspections, for SIAP(s) without a FAF, fly the final segment from the PT distance. Bearing deviation tolerance is ±5° , including holding patterns.

Station Passage. Needle reversal should occur when passing directly over or in very close proximity to the facility. Overfly at minimum procedural altitude. Momentary needle hunting while near or over the station must not constitute false station passage.

Standby Transmitter. Repeat all checks on commissioning. On periodic, try to check transmitter that wasn't checked during the last inspection. International agreements may require periodic inspections on both transmitters.

Standby Power. Not required to check if constantly charged batteries.

Special Inspections. (1) Antenna or transmitter change: periodic plus coverage orbit, airways, routes, transitions and ESV(s); (2) Frequency Change: periodic plus coverage orbit, no requirement to check ESV(s).

Tolerance exceptions. Short duration out-of-tolerance needle action is allowed when either: (1) does not exceed 4 seconds on approach; (2) does not exceed 8 seconds for en route and holding patterns (but no false station passage).

PAR FLIGHT INSPECTION WORKSHEET – (version 2006-3, previous versions are obsolete)							
IDENT	OWNR	STATE	CTRY	INSPECTION DATE(S)	LOCATION	RWY	INSP TYPE

PIC:	MS:	A/C NO.:
PAR TYPE:	FACILITY STATUS:	SERIAL NO.:

CONTRLR PERF SAT ☐ UNSAT ☐	ILS/MLS/VGSI COINC. SAT ☐ UNSAT ☐	STBY EQUIP SAT ☐ UNSAT ☐	STBY PWR SAT ☐ UNSAT ☐	LIGHTING SAT ☐ UNSAT ☐
AZIMUTH RADAR:	COURSE ALIGNMNT SAT ☐ UNSAT ☐	DEVIATION ACC SAT ☐ UNSAT ☐	RANGE ACCRCY SAT ☐ UNSAT ☐	COVERAGE SAT ☐ UNSAT ☐
ELEVATION RADAR:	RANGE ACCRCY SAT ☐ UNSAT ☐	COVERAGE SAT ☐ UNSAT ☐		

FREQUENCIES USED:	SAT:	UNSAT:

MTI/MTD BLIND SPEED (commissioning only): _____KTS VERIFIED: YES ☐ NO ☐
MTI/MTD required for Final Approach? YES ☐ NO ☐
For Computer Generated displays: SCAN (normal radar) Mode Usable for Approach? YES ☐ NO ☐
- if not, record inner limit (minimum distance) for controlling aircraft: _____ NM

GENERIC TYPE PAR(s) (FPN-40, FPN-62/ 63, MPN-14, TPN-18, TPN-44)

RUN	MTI		POLAR-IZATION		TRANSMITTER Note (1)		CURSOR	TX USED	ANGLE	Checks	
	ON	OFF	CP	LP	PRIM	STBY		Note (1)		C	P
Approach #1					X		A			X	X
Approach #2					X		B			X	X
Approach #3						X	A			X	X
Approach #4						X	B			X	X
AZ Only Apch										X	
Alternate Angle							A			X	

Note (1): Transmitters used should be swapped between Periodic inspections. Record in "TX Used" block, 1=Primary, 2=Standby.

GPN-22 and TPN-25 TYPE PAR(s)

RUN	TRACK MODE		FTC		MTI		RCVR CHAN	CUR-SOR	TX USED	ANGLE	Checks	
	NRM	BK UP	ON	OFF	COH	NON-COH			Note (1)		C	P
Approach #1	X		X		X		A	A			X	X
Approach #2		X		X		X	A	A			X	
Approach #3	X		X		X		B	A			X	X
Approach #4	X		X		X		B	B			X	X
Approach #5	X		X		X		A	B			X	
Backup Radar Transmitter (From 20 miles - can combine with Backup Database Checks)												
Approach #1	X		X		X		A	A			X	
Backup Database (EPROM Firmware)												
Approach #1	X		X		X		A	A			X	
Approach #2		X		X		X	A	A			X	
Approach #5	X		X		X		A	B			X	
Azimuth Only Procedure												
	X		X		X		A				X	
Alternate Angle												
Approach #1	X		X		X		A	A			X	
To commission Standby Power (generator), evaluate during any of approaches 1, 3, 4, or 5.												

Note (1): Transmitters used should be swapped between Periodic inspections. Record in "TX Used" block, 1=Primary, 2=Standby.

Commissioning Data (GPN-22/TPN-25): (next page)

Commissioning Data (GPN-22/ TPN-25):

Transmitter Output Power:			
Receiver Sensitivity:	**Normal:**	**Coherent MTI:**	**Non-Coherent MTI:**
Firmware:	**Version No.**	**Part No.**	
Clutter (Rain) Reject:	**YES ☐ NO ☐ NA ☐**		
Digital MTI Baseline Limiting Settings:			
Usable Range (20 NM Radar):			

TPN-22 TYPE PAR(s) (AZIMUTH 46-DEG SECTOR SETTING IS ON FOR ALL RUNS)

RUN	MTI		CFAR		ALS PAR MODE (1)		USABLE DIST	CUR-SOR	ANGLE	Checks	
	ON	OFF	ON	OFF	AUTO	MAN				C	P
Approach #1		X		X	X			A		X	X
Approach #2		X		X	X			B		X	X
Approach #3	X			X	X			A		X	X
Approach #4	X			X	X			B		X	X
Approach #5		X	X			X		A		X	
Approach #6	X		X			X		A		X	
Alternate Touchdown Point #1 (on same runway heading)											
Approach 1A		X		X	X			A		X	X
Approach 2A		X		X		X		A		X	X
Approach 3A		X		X		X		B		X	X
Azimuth Only Procedure											
AZ Only		X		X	X					X	

NOTES for TPN-22:
1. A periodic check should be considered complete if Auto-Mode is inoperative. The PAR must be considered as "Restricted" and authorized for use in Manual-Mode only.
2. If equipped, standby power should be performed on the last run due to the extensive time required to reload the software and data.

Commissioning Data (TPN-22):

Transmitter Output Power:		
Receiver Sensitivity:		
Software:	**Name**	**Build Date**
	Version No.	**Part No.**

MPN-25, TPN-31, FPN-67, and GCA-2000 PAR(s)

Use Generic PAR block for the inspection, equating Clear Mode with Linear Polarization (LP) and Rain Mode with Circular Polarization (CP). The Standby Transmitter B-Cursor approach (#4) is not required for these computer generated PAR(s). There is no manual control of Clear/Rain Mode for the TPN-31 and FPN-67 PAR(s). A database change requires flying approaches #1, #2, and alternate angle using the new database. Record the identifying information for each database checked.